PEDROLLO®
the spring of life

General Catalogue
2024

1974-2024
50TH

PEDROLLO S.p.A.
Via Enrico Fermi 7
37047 San Bonifacio (Verona) ITALY
Share capital € 150,000,000.00

Year of foundation 1974

tel. +39 045 6136311
fax +39 045 7612253

vendite@pedrollo.com
www.pedrollo.com

Pump Selector – The spring of data
The Pedrollo pump selector

https://springofdata.pedrollo.com/selector

Follow us also on:

www.pedrollo4people.com

Facebook
PedrolloCorporate
Pedrollo4People

Instagram

Linkedin

YouTube

Vimeo

CONTENTS

PK 12
PQ 18
PKS 22
Pump with peripheral impeller

CK 26
CKR 28
Liquid ring self-priming pumps

PQ-Bs 30
PQ81-PPS 34
Peripheral pumps for industrial use

PQA 36
Peripheral pumps for industrial use

PV 38
Peripheral pumps for industrial use

PQ 3000 42
Peripheral pumps for industrial use

CP-ST4 44
CP-ST6
Stainless steel centrifugal pumps

CP 52
Centrifugal pumps

2CP 62
Twin impeller centrifugal pumps

2-4CP - I 70
Multi-impeller centrifugal pumps

2-5CR 74
Multi-impeller centrifugal pumps

FCR 78
Multi-impeller centrifugal pumps

MK 90
Multi-impeller centrifugal pumps

HT 94
HT-PRO 104
Multi-impeller centrifugal pumps

FUTURE JET 114
JSW 118
JET self-priming pumps

FUTURE JET-ST 126
JCR 130
JET self-priming pumps

MAGNIFICA 134
PRIMA 138
VILLABELLA 142
MAXIMA 146
Self-priming swimming pool pumps

SPRINKLER 150
Self-priming centrifugal pumps

PLURIJET 154
Multi-impeller self-priming pumps

NGA 166
NGA-PRO 170
Centrifugal pumps with open impeller

HF Medium flow rates 174
HF High flow rates 178
Centrifugal pumps

WR 182
Close-coupled centrifugal pumps

F 186
F-I 204
F4 206
Standardised centrifugal pumps EN733

FG 212
Standardised centrifugal pumps EN733

FLUID SOLAR 216
4" Solar submersible pumps

4-BLOCK 220
4" Close-coupled electric submersible pumps

DAVIS 226
4" peripheral submersible pump

3SR 228
3" submersible pumps

4SR 234
6SR 244
4" and 6" submersible pumps

6ST 252
6" submersible pumps

4HR 256
6HR 260
4" and 6" submersible pumps

4PD 264
4PS 266
6PD 268
6PSR 270
4" and 6" submersible motors

TOP MULTI 272
Multi-impeller submersible pumps

UP 288
NK 292
Multi-impeller submersible pumps

TOP 296
Submersible drainage pumps

TEX 308

VORTEX submersible pumps

TOP MULTI-AD 312

Submersible pump for AdBlue®

PLUG & DRAIN 314

Anti-flooding kit

RX 316

Submersible drainage pumps

VX-ST 328
BC-ST 332

Stainless steel submersible pumps

VX-MF 338
BC-MF 342

Micro-cast stainless steel submersible pumps

D 348

Submersible pumps for drainage

ZXm2 352

Submersible pump

FAMILY 356

Submersible pump

ZXm1 358

Submersible pumps

VX 360
BC 364

Submersible pumps

VXC 368
MC 372

Submersible pumps

DC 374

Submersible pumps

TRITUS-TX 378

Submersible pumps with grinder

TRITUS-INOX 380

Submersible pumps with grinder

TRITUS 384

Submersible pumps with grinder

VXC 396
MC 400

Submersible pumps

VXC-F 404
MC-F 408

Flanged submersible pumps

VX40-50-65 414
BC35 418

Submersible pumps

VX4 424
BC4 428

Submersible pumps - 4 POLES

VXC4 Medium flow rates 434
MC4 Medium capacities 438
VXC4 High flow rates 444
MC4 High flow rates 448

Submersible pumps - 4 POLES

SAR 454

Accumulation and lifting stations

EASYPUMP 462

Pumps with pressure regulator

HYDROFRESH 463

Automatic pressure units

DG-BLU 464

Pressurisation system with inverter

EASYSMALL 468
EASYPRESS 469

Automatic control devices

PRESFLO VARIO 470
PRESFLO MULTI 471
PRESET 472

Automatic control devices

EP 473

Electronic protection device

STEADYPRES 474
476

Inverter with water passage

DG-FIT 478
PRO-DG 480

Wall-mounted inverter

CB2 482

Fixed speed pressure units

TISSEL-100 502

Pumps with inverters

VSP 506

Pumps with inverters

VSP2 522
GPW 538

Variable speed pumping units

DHL 550

Circulators for heating systems

E1 - E2 552

Multifunctional electronic boards

CONTROL PANELS 554

ACCESSORIES 557

BEARINGS 568

CAPACITORS 571

OUR GROUP

The Pedrollo Group brings together a range of companies specialising in water, energy, and technology. We are committed to meeting the varied needs of our diverse client base, providing tailored solutions across these essential sectors.

Pumps for domestic, agricultural and industrial use	**Swimming pool pumps**	**Pumps in stainless steel for special purposes**	**Alternators and rotating machines**
BRANCHES France, Hungary, Romania, United Arab Emirates, Mexico, Colombia, Guatemala, USA, Thailand, Germany, Poland, Linz Electric Inc.	**Pumps and submersible motors**	**Residential and commercial pumps**	**Software and electronic equipment**

WATER **ENERGY** **TECNOLOGY**

WHERE WE ARE

Italy: Pedrollo - Linz Electric - Panelli - City Pumps - Gread Elettronica
Spain: Saci Pumps
USA: Superior Pump

WHAT WE DO

Water, energy, technology

The **Pedrollo Group** is a leader in water management, energy, and technology solutions. We are committed to tackling the world›s most pressing daily challenges. We focus on driving economic growth, enhancing human well-being, and safeguarding our environment. Given the urgency of these critical missions, our dedication is more crucial than ever.

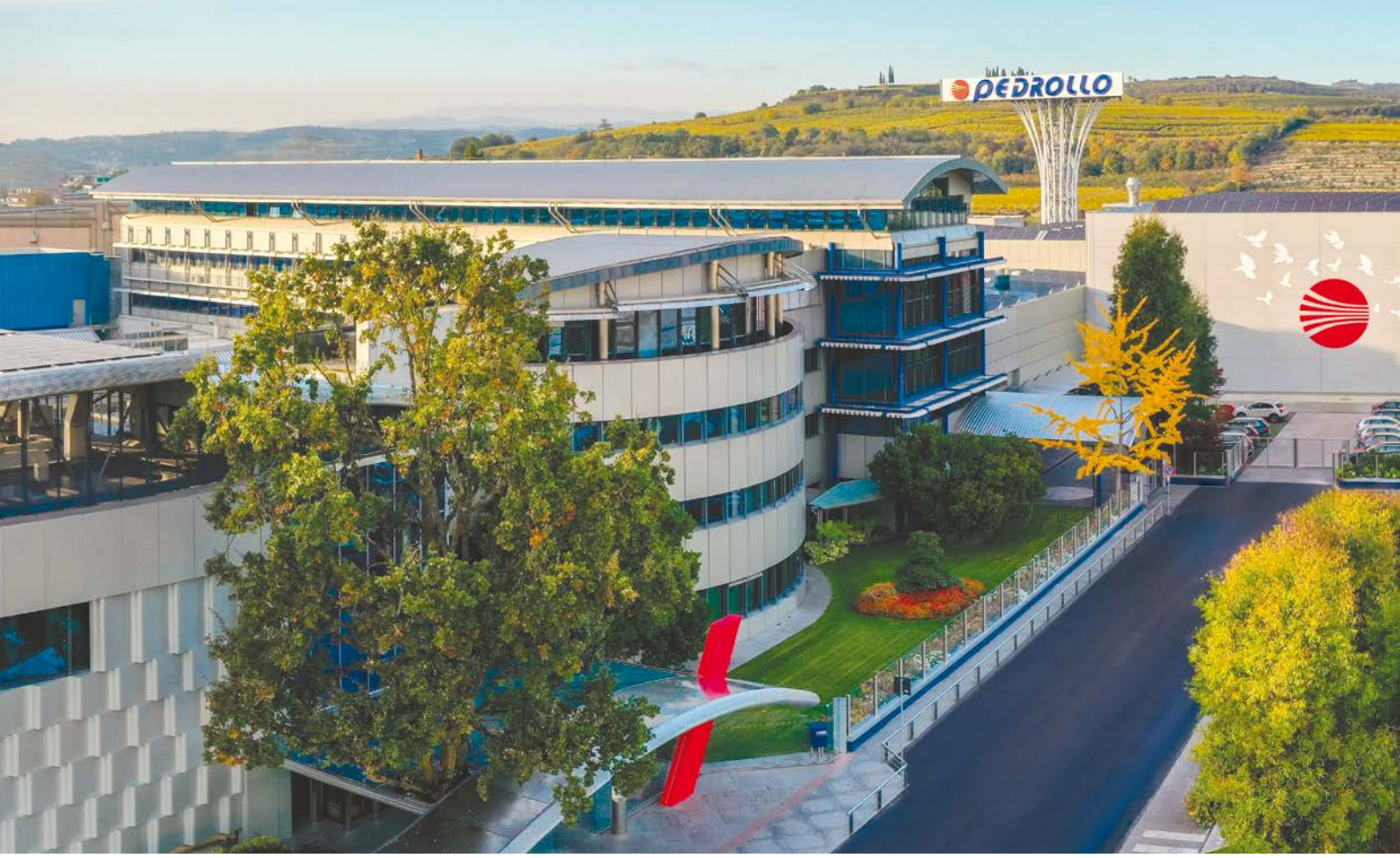

OUR NUMBERS

3 million pumps sold annually in
160 Countries around the world
12 Branches
5 Continents

The Pedrollo Industrial District
240,000 m² of industrial space in San Bonifacio
130,000 m² houses all Pedrollo departments, divisions, and offices

DESIGN, CREATIVITY AND QUALITY
INNOVATION MADE IN ITALY

SUSTAINABLE DEVELOPMENT GOALS

12 RESPONSIBLE CONSUMPTION AND PRODUCTION

CIRCULAR ECONOMY

Annually, our commitment to sustainability enables us to reclaim and recycle significant materials from our production processes, including over:

15 tonnes of plastic
485 tonnes of steel
58 tonnes of aluminium

PHOTOVOLTAIC SYSTEM

Installed power: over **3.5** MW
Energy output: over **3,000,000** kWh/year
CO_2 saved: over **1,200** tonnes/year

CORPORATE GREEN AREAS

Our commitment to green spaces at our headquarters is vital for optimising the microclimate in our offices and operational zones.

So far, we have:

- Planted **556** trees from **36 species**.
- Incorporated **25,000** bushes and shrubs.
- Developed **40,000 m²** of beautifully landscaped space

RAINWATER SYSTEMS

By the first half of 2023, we had saved over **2.5 million litres of rainwater**, repurposing it for industrial and agricultural needs**.**

WATER MANAGEMENT

We reclaim **90%** of the water used in our production processes through vacuum evaporation, totalling more than **1 million litres annually**.

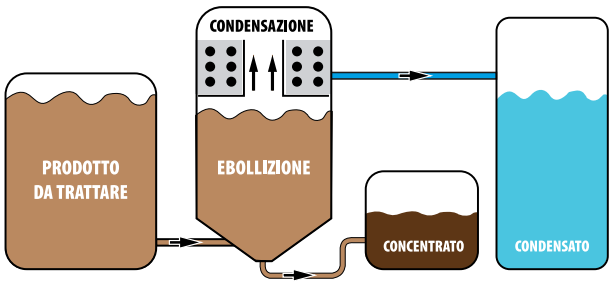

UNIVERSITY OF PADUA

POSITIVE IMPACT

The **ETIFOR Report** carried out by the **University of Padua** measured the positive impact of our green areas on the environment and the business ecosystem.

CO_2 consumption:
22 TONNES/YEAR

Oxygen produced:
16 TONNES/YEAR

Reduction of water dispersion:
48,000 LITRES/YEAR

Removal of various pollutants:
CO - NO_2- O_3 - PM10 - PM2.5 -SO_2

SUSTAINABLE DEVELOPMENT GOALS

13 CLIMATE ACTION

5 LIFE ON LAND

PEDROLLO FOR CULTURE

Pedrollo has established close partnerships with several universities and training institutions to foster cultural and talent development. Among these partnerships, the "**Arrigo Pedrollo" Conservatory in Vicenza** holds a special place. Named after the Pedrollo family and maintaining a close connection to their cultural origins, it collaborates with over 100 dedicated teachers and annually educates over 700 young musicians worldwide. This partnership exemplifies Pedrollo's unwavering commitment to preserving and nurturing their community's cultural and artistic heritage.

PEDROLLO®
the spring of life

LOOKING FORWARD TO THE FUTURE

A unique corporate environment, fully sustainable and technologically advanced

EXCELLENCE IN CREATIVITY AND INNOVATION

- **Leonardo da Vinci Award 2022**
  Paris
- **Italian Quality Award 2015**
  Quirinale Palace, Rome

PEDROLLO® 4People

WATER, HEALTH, CULTURE, COMMUNITY

Our dedication to global solidarity and sustainable development has empowered us to construct over 1,300 wells, ensuring clean water for more than 2 million people. This initiative facilitates the availability of fresh drinking water and promotes more hygienic and sanitary living conditions. By improving hygiene and health, we contribute to creating better environments for families to nurture their children, reinforcing our commitment to enhancing the quality of life and fostering thriving communities worldwide.

STANDARD VERSIONS

VOLTAGES

- Single-phase: **230 V - 50 Hz** with built-in circuit breaker (motor protection).
- Three-phase up to 4 kW and three-phase 4-pole: **230/400 V - 50 Hz**.
- Three-phase 5.5 kW: **400/690 V - 50 Hz**.

CAPACITORS

- Capacitors in accordance with EN 60252-1/A1

YIELDS AND ENERGY EFFICIENCY

- **The single-phase surface pumps are equipped with high-efficiency motors of class IE2 (IEC 60034-30-1)**
- **Three-phase surface pumps are equipped with high-efficiency motors in class IE3 (IEC 60034-30-1)**
- **Pumps that fall within the scope of the EU Regulation No. 547/2012 must have a minimum efficiency index MEI≥0.40**

REGULATION (EU) NO 547/2012

- Pumps with a Minimum Efficiency Index (MEI) ≥ 0.40 comply with EU Regulation 547/2012, effective January 1st, 2015.
- The benchmark for the most efficient water pumps is MEI ≥ 0.70.
- The efficiency of a pump with a trimmed impeller is usually lower than that of a pump with a full impeller diameter. The trimming of the impeller will adapt the pump to a fixed-duty point, leading to reduced energy consumption. The minimum efficiency index (MEI) is based on the full impeller diameter.
- The operation of this water pump with variable duty points may be more efficient and economical when controlled, for example, by using a variable speed drive that matches the pump duty to the system.
- Information on benchmark efficiency is available at:www.europump.org/efficiencycharts

USES

- Install in enclosed and well-ventilated areas or locations that offer adequate protection from adverse weather conditions
- The 10 m power cable is mandatory for outdoor use according to EN 60335-2-41

EXECUTION AND SAFETY STANDARDS

- **EN 60335-1**
- **IEC 60335-1**
- **CEI 61-150**
- **EN 60034-1**
- **IEC 60034-1**
- **CEI 2-3**

SPECIAL DESIGN

- Pumps with special voltages or 60 Hz frequency.
- Pumps with special mechanical seals, suitable for the different liquids to be conveyed.
- Surface pumps with IP X5 protection.
- Submersible pumps without float.

SPECIAL WINDINGS ON REQUEST

- 110 V - 50 Hz (Single-phase)
- 240 V - 50 Hz (Single-phase)
- 110 V - 60 Hz (Single-phase)
- 220 V - 60 Hz (Single-phase)
- 240/415 V - 50 Hz (Three-phase)
- 220/380 V - 60 Hz (Three-phase)

CERTIFICATIONS AND MARKS

WARRANTY

- Our products have a comprehensive 2-year warranty, subject to the terms and conditions outlined in our general agreement

PKm 60® Peripheral impeller pump

Clean water

Domestic use

※ **The PKm 60® a cornerstone since 1974, an integral part of our future.**

※ **50 years of success since 1974**
※ **Produced over 23 million units**
※ **Made from premium materials and components**
※ **Our most economical and versatile product**
※ **Noise level reduced by20 %**
※ **Exclusively produced with renewable energy sources**

PERFORMANCE RANGE

- Flow rate up to **40 l/min** (2.4 m³/h)
- Head up to **40 m**

INSTALLATION AND USE

Designed to transfer clean water free from abrasive particles and liquids that will not damage the pump's components.
Reliable, easy to operate, and cost-effective. It is ideal for domestic applications, specifically for gardens and orchards, in combination with small autoclave tanks.

ELECTRIC MOTOR

Three-phase pumps feature **IE3**-class electric motors, while single-phase models use **IE2** motors. All are designed with class F insulation and IPX4 protection.

APPLICATION LIMITS

- Manometric suction head up to **8 m**
- Liquid temperature between **-10 °C** and **+60 °C**
- Ambient temperature up to **+50 °C**
- Maximum working pressure **6 bar**

PATENTS - TRADE MARKS - MODELS

- Motor bracket: Patent No. IT1243605
- Pump body: Patent No. 0000275946
- Registered community model No. 018625876
- International registered model No. DM/220613
- PKm 60® Registered Trade mark No. 009875394

AVAILABLE UPON REQUEST

※ Different voltage requirements 60 Hz frequency

CURVES AND PERFORMANCE DATA – HS=0 m

50 Hz

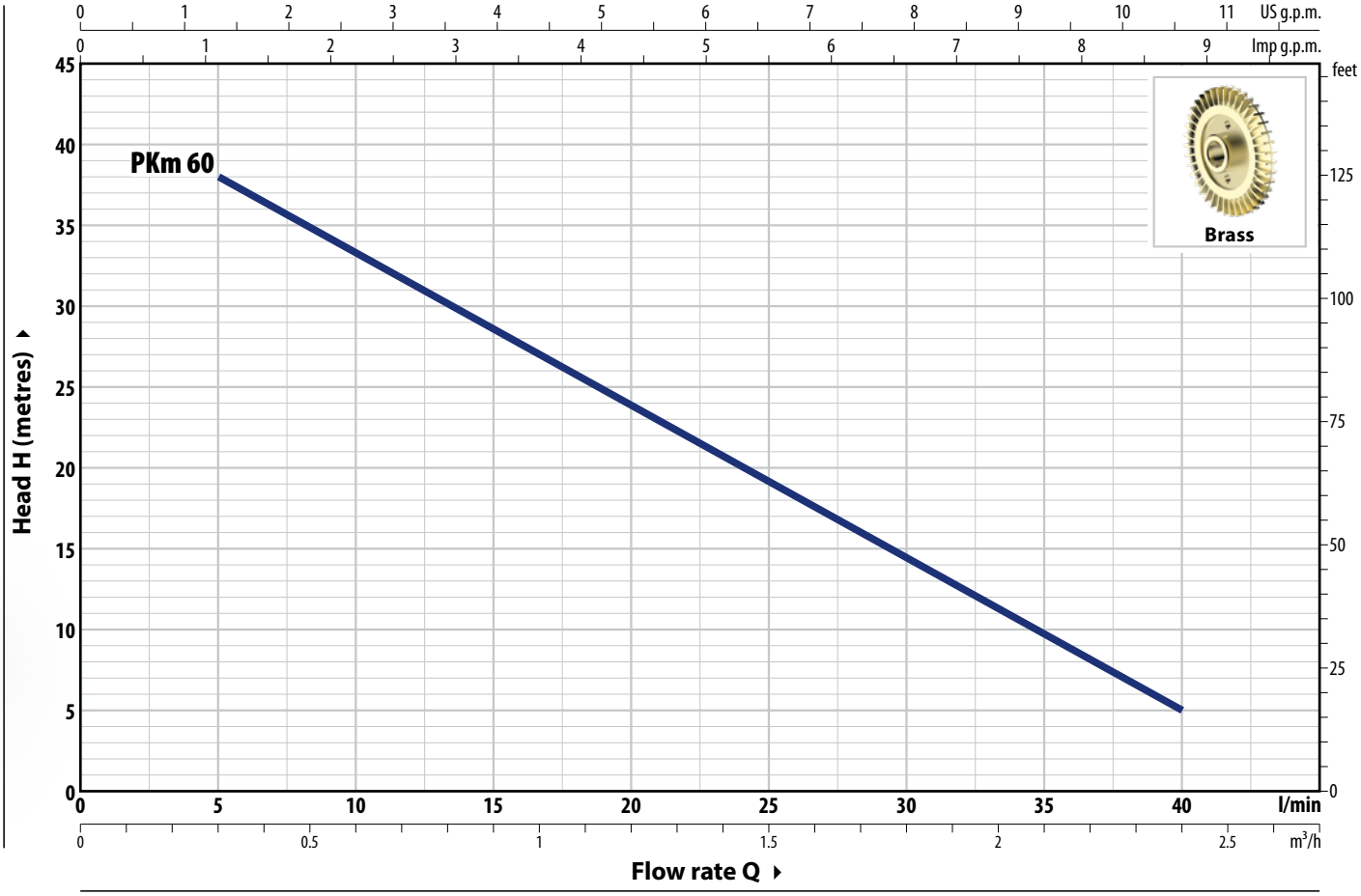

TYPE		POWER (P2)				Q	m³/h	0	0.3	0.6	0.9	1.2	1.5	1.8	2.1	2.4
Single-ph.	**Three-ph.**	**kW**	**HP**	**1~**	**3~**		l/min	**0**	**5**	**10**	**15**	**20**	**25**	**30**	**35**	**40**
PKm 60	**PK 60**	0.30	0.40	**IE2**	**IE3**	**H**	metres	40	38	33.5	29	24	19.5	15	10	5

Q = Flow rate **H** = Total manometric head **HS** = Suction height

Performance curves comply with EN ISO 9906 Grade 3B tolerance limits.

ABSORPTION

TYPE **Single-phase**	VOLTAGE **230 V**
PKm 60®	2.3 A

TYPE **Three-phase**	VOLTAGE **230 V - Δ**	**400 V - ⅄**
PK 60®	2.0 A	1.15 A

DIMENSIONS AND WEIGHT

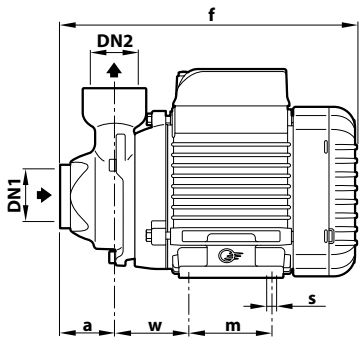

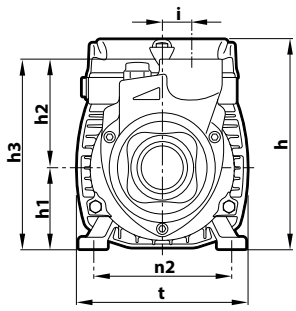

TYPE		PORTS		DIMENSIONS mm												kg		PALLET CAPACITY
Single-ph.	**Three-ph.**	**DN1**	**DN2**	a	f	h	h1	h2	h3	i	m	t	n2	w	s	1~	3~	
PKm 60®	**PK 60®**	**1"**	**1"**	38	208	145	56	75	131	20	55	118	94-100	53	7	5.0	5.0	240

PK Peripheral impeller pumps

Clean water

Domestic use

※ **New version featuring a 20% reduction in noise levels.**

PERFORMANCE RANGE

- Flow rate up to **90 l/min** (5.4 m³/h)
- Head up to **100 m**

INSTALLATION AND USE

Designed to transfer clean water free from abrasive particles and liquids that will not damage the pump's components.
Reliable, easy to operate, and cost-effective. They are ideal for domestic applications, specifically for gardens and orchards, in combination with small autoclave tanks.

APPLICATION LIMITS

- Manometric suction head up to **8 m**
- Liquid temperature between **-10 °C** and **+60 °C**
- Ambient temperature up to **+40 °C**
- Maximum working pressure:
  - **6 bar** for PK 65
  - **7 bar** for PK 80
  - **10 bar** for PK 90, PK 100, PK 200, PK 300

AVAILABLE UPON REQUEST

※ Mechanical seal options available
※ Protection rating IP X5 for PK 80-90-100-200-300
※ Different voltage requirements 60 Hz frequency

PATENTS - TRADE MARKS - MODELS

- Motor bracket: Patent No. IT1243605
- Pump body: Patent No. 0000275946 (PK65)

CURVES AND PERFORMANCE DATA – HS=0 m

50 Hz

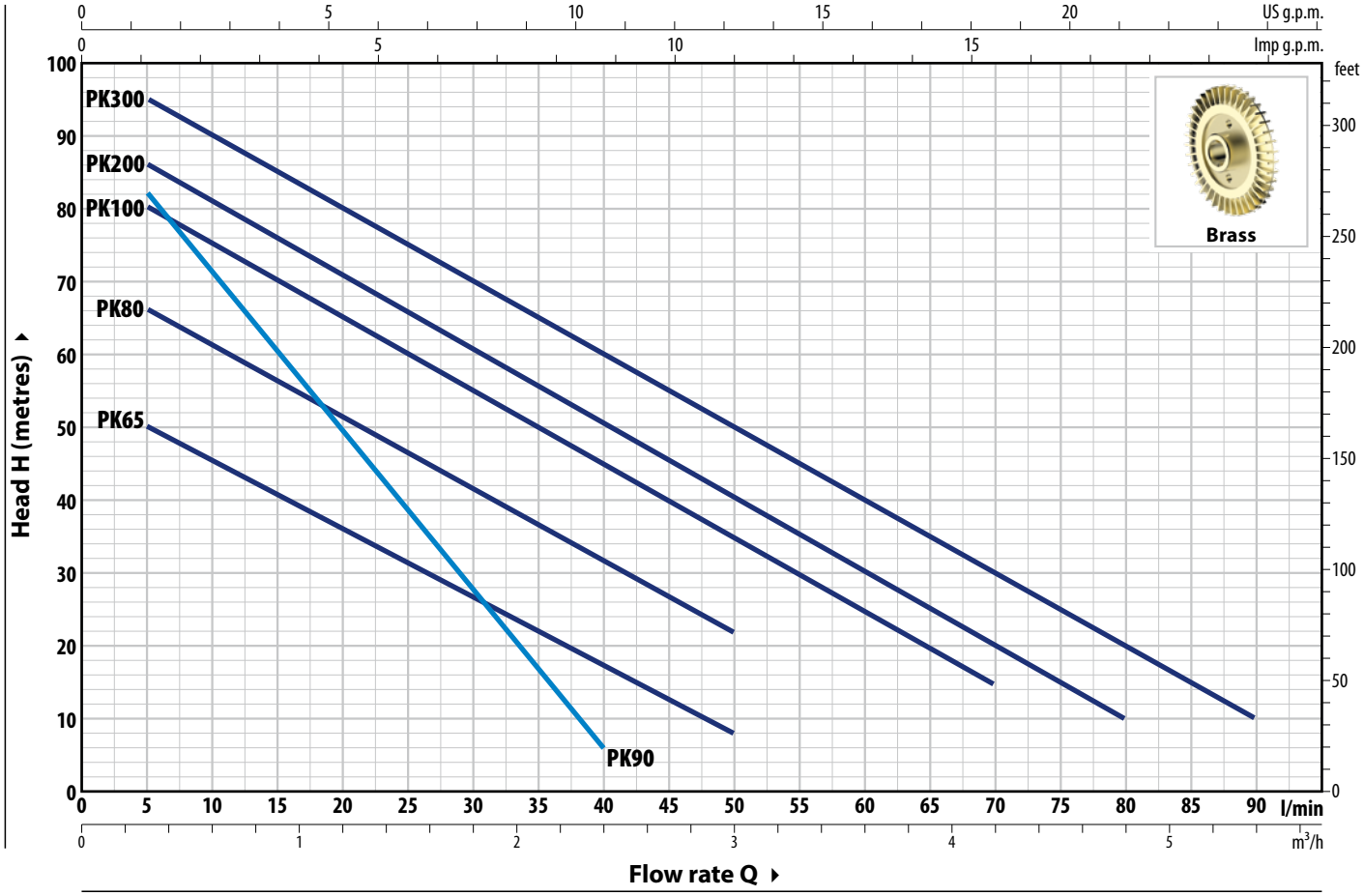

TYPE		POWER (P2)				Q	m³/h	0	0.3	0.6	0.9	1.2	1.5	1.8	2.1	2.4	3.0	3.6	4.2	4.8	5.4
Single-ph.	**Three-ph.**	**kW**	**HP**	**1~**	**3~**		l/min	**0**	**5**	**10**	**15**	**20**	**25**	**30**	**35**	**40**	**50**	**60**	**70**	**80**	**90**
PKm 65	**PK 65**	0.55	0.75					55	50	45.5	40.5	36	31	27	22	17	8				
PKm 80	**PK 80**	0.75	1					70	66	61	56	51	46	41	36.5	31	22				
PKm 90	**PK 90**	0.75	1					90	82	71	60	49	38	27	17	5					
PKm 100	**PK 100**	1.1	1.5	**IE2**	**IE3**	**H** metres		85	80	75	70	65	60	55	50	45	35	24.5	15		
PKm 200	**PK 200**	1.5	2					90	86	81	76	71	65.5	60	55	50	40	30	20	10	
PKm 300	**PK 300**	2.2	3					100	95	90	85	80	75	70	65	60	50	40	30	20	10

Q = Flow rate **H** = Total manometric head **HS** = Suction height

Performance curves comply with EN ISO 9906 Grade 3B tolerance limits.

ABSORPTION

TYPE **Single-phase**	VOLTAGE **230 V**
PKm 65	3.7 A
PKm 80	5.2 A
PKm 90	5.6 A
PKm 100	9.0 A
PKm 200	11.5 A
PKm 300	12.0 A

TYPE	VOLTAGE	
Three-phase	**230 V - Δ**	**400 V - ⅄**
PK 65	2.9 A	1.7 A
PK 80	3.8 A	2.2 A
PK 90	4.0 A	2.3 A
PK 100	6.2 A	3.6 A
PK 200	8.3 A	4.8 A
PK 300	9.0 A	5.2 A

DIMENSIONS AND WEIGHT

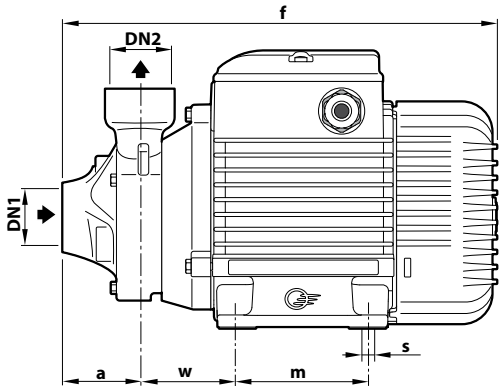

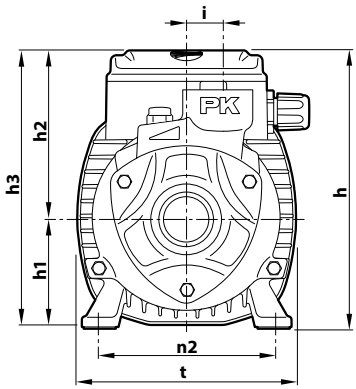

TYPE		PORTS		DIMENSIONS mm												kg	
Single-ph.	**Three-ph.**	**DN1**	**DN2**	a	f	h	h1	h2	h3	i	m	t	n2	w	s	1~	3~
PKm 65	**PK 65**	**1"**	**1"**	38	237	153	63	75	138	20	80	120	100	53	7	6.9	6.3
PKm 80	**PK 80**			55	285	179 *	71	85	156		90	140	112	62		10.3	10.3
PKm 90	**PK 90**	**¾"**	**¾"**	46	278			84	155	19						10.3	10.3
PKm 100	**PK 100**	**1"**	**1"**	62	356	212	80	88	168	19	100	152	125	95	9	15.1	15.1
PKm 200	**PK 200**															16.3	16.3
PKm 300	**PK 300**				376											18.9	18.8

(*) h=199 mm for single-phase 110 V versions

PALLET CAPACITY

TYPE		NO. OF PUMPS
Single-ph.	**Three-ph.**	
PKm 65	**PK 65**	189
PKm 80	**PK 80**	119
PKm 90	**PK 90**	102
PKm 100	**PK 100**	72
PKm 200	**PK 200**	72
PKm 300	**PK 300**	72

CONSTRUCTION FEATURES

1	**Pump body**	Cast iron with ISO 228/1 threaded ports
2	**Motor bracket**	Aluminum with brass cover and front scraping anti-locking function (patented)
3	**Impeller**	Brass, radial peripheral vane type
4	**Mechanical seal**	

Pump	Seal	Shaft	Materials
PK 60-65-80	**AR-12**	Ø 12 mm	Ceramic / Graphite / NBR
PK 90	**ST1-12**	Ø 12 mm	Silicon carbide / Graphite / NBR
PK 100-200-300	**FN-14**	Ø 14 mm	Graphite / Ceramic / NBR

5	**Motor shaft**	Stainless steel **AISI 431** (EN 10088-3 - 1.4104 for PK 60, PK 65)
6	**Electric motor**	**PKm**: single-phase 230 V - 50 Hz with winding integrated thermal motor protection. **PK**: three-phase 230/400 V - 50 Hz ※ Pumps are equipped with high-efficiency motors (IEC 60034-30-1) class **IE2** for single-phase models class **IE3** for three-phase models – Continuous running duty **S1** – Insulation: class F – Protection rating: IP X4

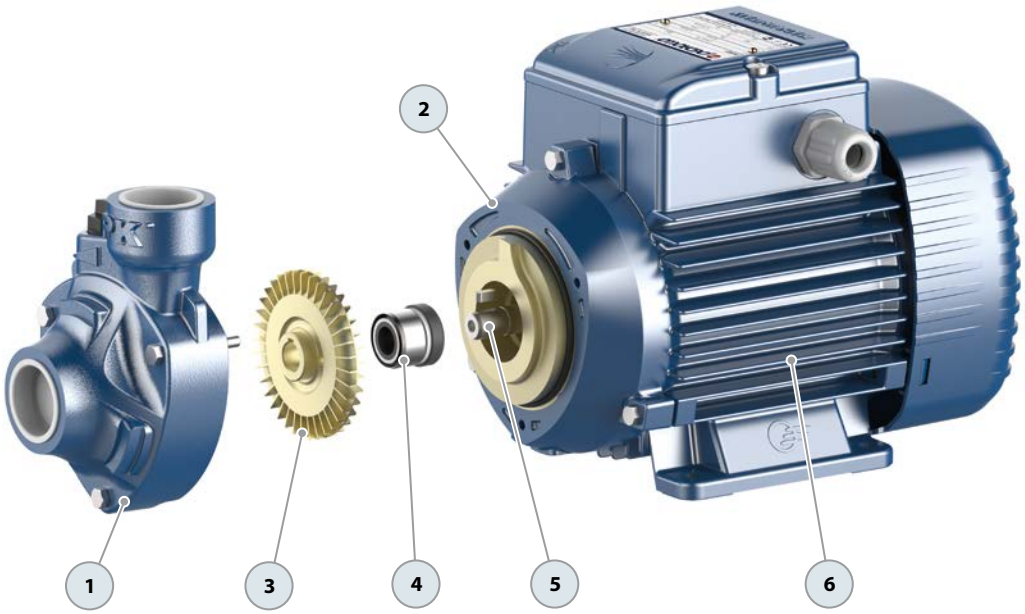

Peripheral impeller pump

Clean water

Domestic use

※ **New version featuring a 20% reduction in noise levels.**

PERFORMANCE RANGE

- Flow rate up to **90 l/min** (5.4 m³/h)
- Head up to **100 m**

INSTALLATION AND USE

Peripheral pump with radial suction.

Designed to transfer clean water free from abrasive particles and liquids that will not damage the pump's components.

Its compact design and efficient hydraulic performance make it ideal for **domestic applications**.

APPLICATION LIMITS

- Manometric suction head up to **8 m**
- Liquid temperature between **-10 °C** and **+60 °C**
- Ambient temperature up to **+40 °C** (**+50 °C** for PQ 60 and PQ61)
- Maximum working pressure:
  - **6 bar** for PQ 60, PQ 61, PQ 65
  - **7 bar** for PQ 80
  - **10 bar** for PQ 90, PQ 100, PQ 200, PQ 300

AVAILABLE UPON REQUEST

※ Pumps for industrial use
※ Mechanical seal options available
※ Protection rating IP X5 for PQ 80-90-100-200-300
※ Different voltage requirements 60 Hz frequency

PATENTS - TRADE MARKS - MODELS

- Motor bracket: Patent No. IT1243605
- Registered community model No. 002146548
- PQm 60® Registered trademark No. 0001520591

CURVES AND PERFORMANCE DATA – HS=0 m

50 Hz

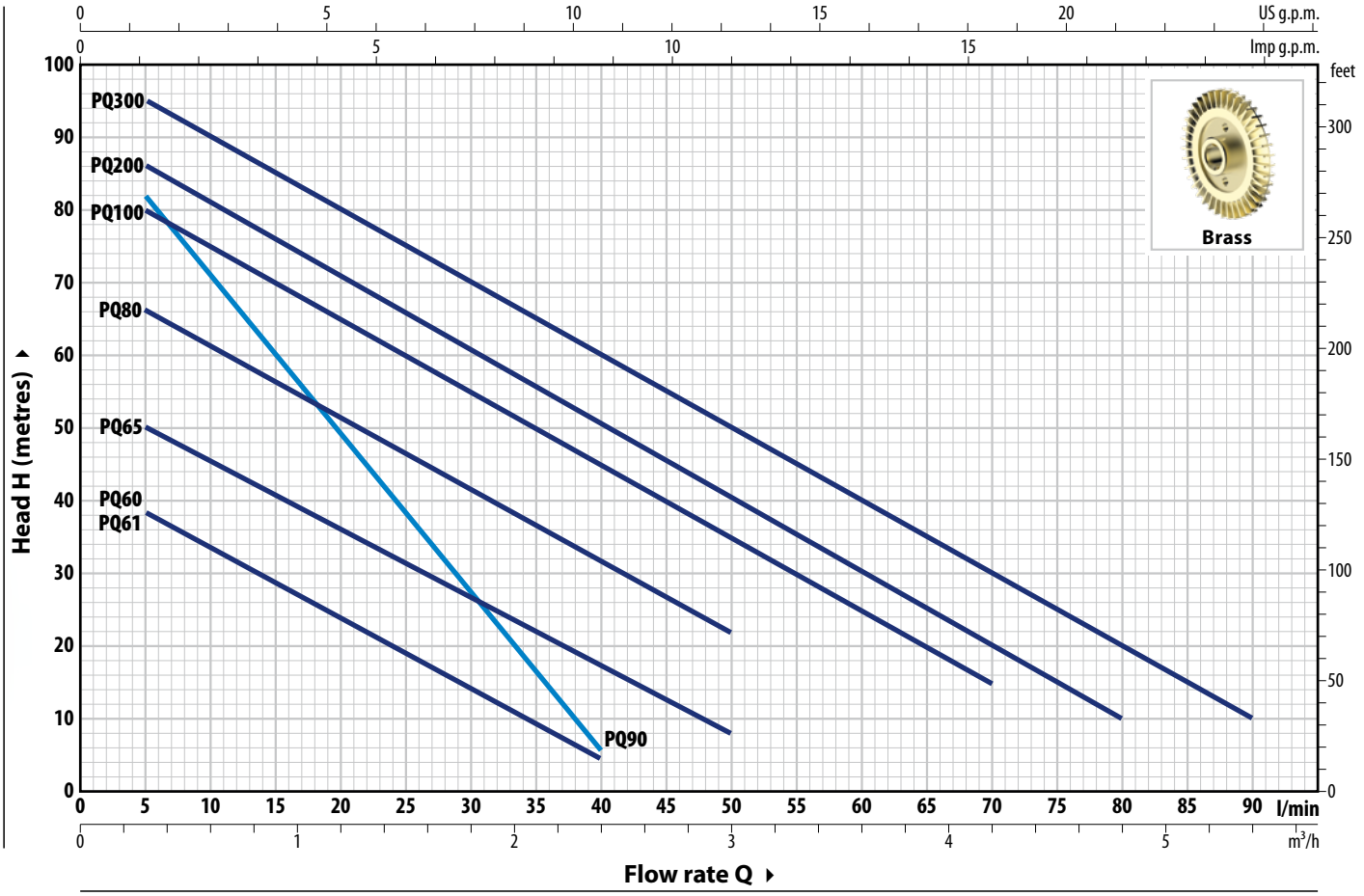

TYPE		POWER (P2)				Q m³/h	0	0.3	0.6	0.9	1.2	1.5	1.8	2.1	2.4	3.0	3.6	4.2	4.8	5.4
Single-ph.	**Three-ph.**	**kW**	**HP**	**1~**	**3~**	l/min	**0**	**5**	**10**	**15**	**20**	**25**	**30**	**35**	**40**	**50**	**60**	**70**	**80**	**90**
PQm 60	**PQ 60**	0.30	0.40				40	38	33.5	29	24	19.5	15	10	5					
PQm 61	**PQ 61**	0.30	0.40				40	38	33.5	29	24	19.5	15	10	5					
PQm 65	**PQ 65**	0.55	0.75				55	50	45.5	40.5	36	31	27	22	17	8				
PQm 80	**PQ 80**	0.75	1				70	66	61	56	51	46	41	36.5	31	22				
PQm 90	**PQ 90**	0.75	1	**IE2**	**IE3**	**H** metres	90	82	71	60	49	38	27	17	5					
PQm 100	**PQ 100**	1.1	1.5				85	80	75	70	65	60	55	50	45	35	25	15		
PQm 200	**PQ 200**	1.5	2				90	86	81	76	71	65.5	60	55	50	40	30	20	10	
PQm 300	**PQ 300**	2.2	3				100	95	90	85	80	75	70	65	60	50	40	30	20	10

Q = Flow rate **H** = Total manometric head **HS** = Suction height

Performance curves comply with EN ISO 9906 Grade 3B tolerance limits.

ABSORPTION

TYPE	VOLTAGE
Single-phase	**230 V**
PQm 60	2.3 A
PQm 61	2.3 A
PQm 65	3.7 A
PQm 80	5.2 A
PQm 90	5.6 A
PQm 100	9.0 A
PQm 200	12.0 A
PQm 300	13.0 A

TYPE	VOLTAGE	
Three-phase	**230 V - Δ**	**400 V - ⅄**
PQ 60	2.0 A	1.15 A
PQ 61	2.0 A	1.15 A
PQ 65	2.9 A	1.7 A
PQ 80	3.8 A	2.2 A
PQ 90	4.2 A	2.4 A
PQ 100	6.2 A	3.6 A
PQ 200	8.3 A	4.8 A
PQ 300	9.0 A	5.2 A

DIMENSIONS AND WEIGHT

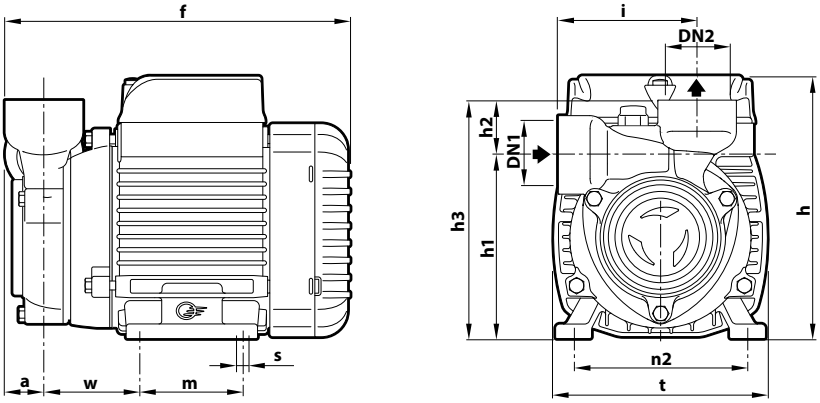

TYPE		PORTS		DIMENSIONS mm												kg	
Single-ph.	**Three-ph.**	**DN1**	**DN2**	a	f	h	h1	h2	h3	i	m	t	n2	w	s	1~	3~
PQm 60	**PQ 60**	**1"**	**1"**	22	192	145	101	30	131	76	55	118	94-100	53	7	4.9	4.9
PQm 61	**PQ 61**	**½"**	**½"**					32.5	133.5							4.9	4.9
PQm 65	**PQ 65**	**1"**	**1"**	22	220	152	113	30	143	78	80	120	100			6.8	6.2
PQm 80	**PQ 80**				256	152(*)	121		151	83	90	142	112	62.5		9.9	9.9
PQm 90	**PQ 90**	**¾"**	**¾"**				126	27	153	84						10.1	10.1
PQm 100	**PQ 100**	**1"**	**1"**	29	322.5	211	140	28	168	88	100	164	125	95	9	14.3	14.3
PQm 200	**PQ 200**															15.4	15.4
PQm 300	**PQ 300**				342.5											18.2	18.2

(*) h=199 mm for single-phase 110 V versions

PALLET CAPACITY

TYPE		NO. OF PUMPS
Single-ph.	**Three-ph.**	
PQm 60	**PQ 60**	256
PQm 61	**PQ 61**	256
PQm 65	**PQ 65**	210
PQm 80	**PQ 80**	102
PQm 90	**PQ 90**	102
PQm 100	**PQ 100**	72
PQm 200	**PQ 200**	72
PQm 300	**PQ 300**	72

CONSTRUCTION FEATURES

1 Pump body

Cast iron with ISO 228/1 threaded ports
For PQ 61: cast iron with anti-locking treatment with ISO 228/1 threaded ports

2 Motor bracket

Aluminum with brass cover and front scraping anti-locking function (patented)

3 Impeller

Brass, radial peripheral vane type

4 Mechanical seal

Pump	Seal	Shaft	Materials
PQ 60-61-65-80	**AR-12**	Ø 12 mm	Ceramic / Graphite / NBR
PQ 90	**ST1-12**	Ø 12 mm	Silicon carbide / Graphite / NBR
PQ 100-200-300	**FN-14**	Ø 14 mm	Graphite / Ceramic / NBR

5 Motor shaft

Stainless steel **AISI 431** (EN 10088-3 - 1.4104 for PQ 60, PQ 61, PQ 65)

6 Electric motor

PQm: single-phase 230 V - 50 Hz with winding integrated thermal motor protection.
PQ: three-phase 230/400 V - 50 Hz

※ Pumps are equipped with high-efficiency motors (IEC 60034-30-1)
class **IE2** for single-phase models
class **IE3** for three-phase models

- Continuous running duty **S1**
- Insulation: class F
- Protection rating: IP X4

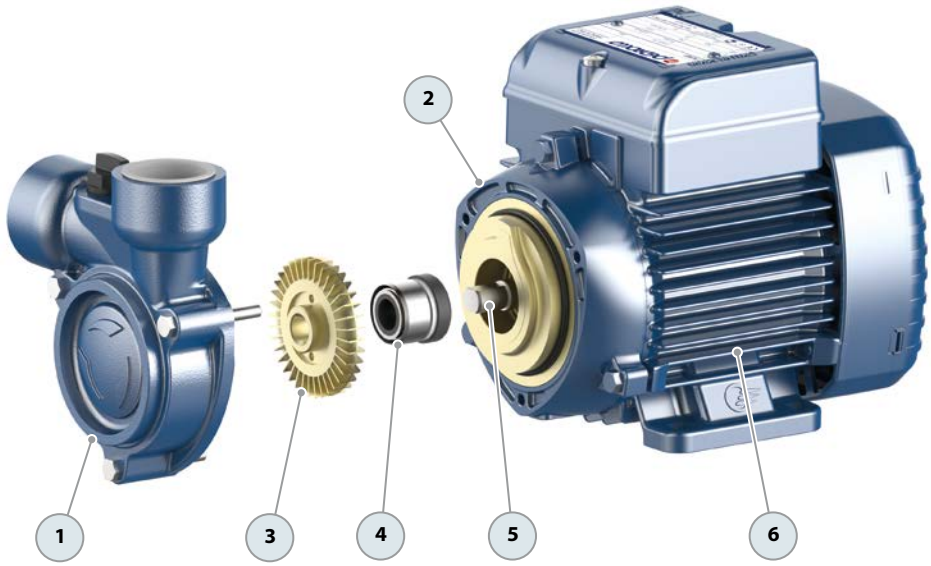

PKS Self-priming pumps with peripheral impeller

Clean water

Domestic use

※ **New version featuring an anti-lock braking system.**
※ **Noise levels reduced by 20%.**

PERFORMANCE RANGE

- Flow rate up to **50 l/min** (3.0 m³/h)
- Head up to **70 m**

INSTALLATION AND USE

Designed to transfer clean water free from abrasive particles and liquids that will not damage the pump's components.

Compact, reliable, and cost-effective, they are ideal for domestic applications when paired with small autoclave tanks, and for irrigating gardens and orchards. They are also effective in drawing water from tanks and pumping liquids that contain air or gas. The pumps come equipped with a non-return check valve for suction.

APPLICATION LIMITS

- Manometric suction head up to **9 m** (HS)
- Liquid temperature between **-10 °C** and **+60 °C**
- Ambient temperature up to **+40 °C** (**+50 °C** for PKS 60)
- Maximum working pressure:
  – **6 bar** for PKS 60, PKS 65
  – **7 bar** for PKS 80

AVAILABLE UPON REQUEST

※ Mechanical seal options available
※ Different voltage requirements 60 Hz frequency

PATENTS - TRADE MARKS - MODELS

- Motor bracket: Patent No. IT1243605

CURVES AND PERFORMANCE DATA – HS=0 m

50 Hz

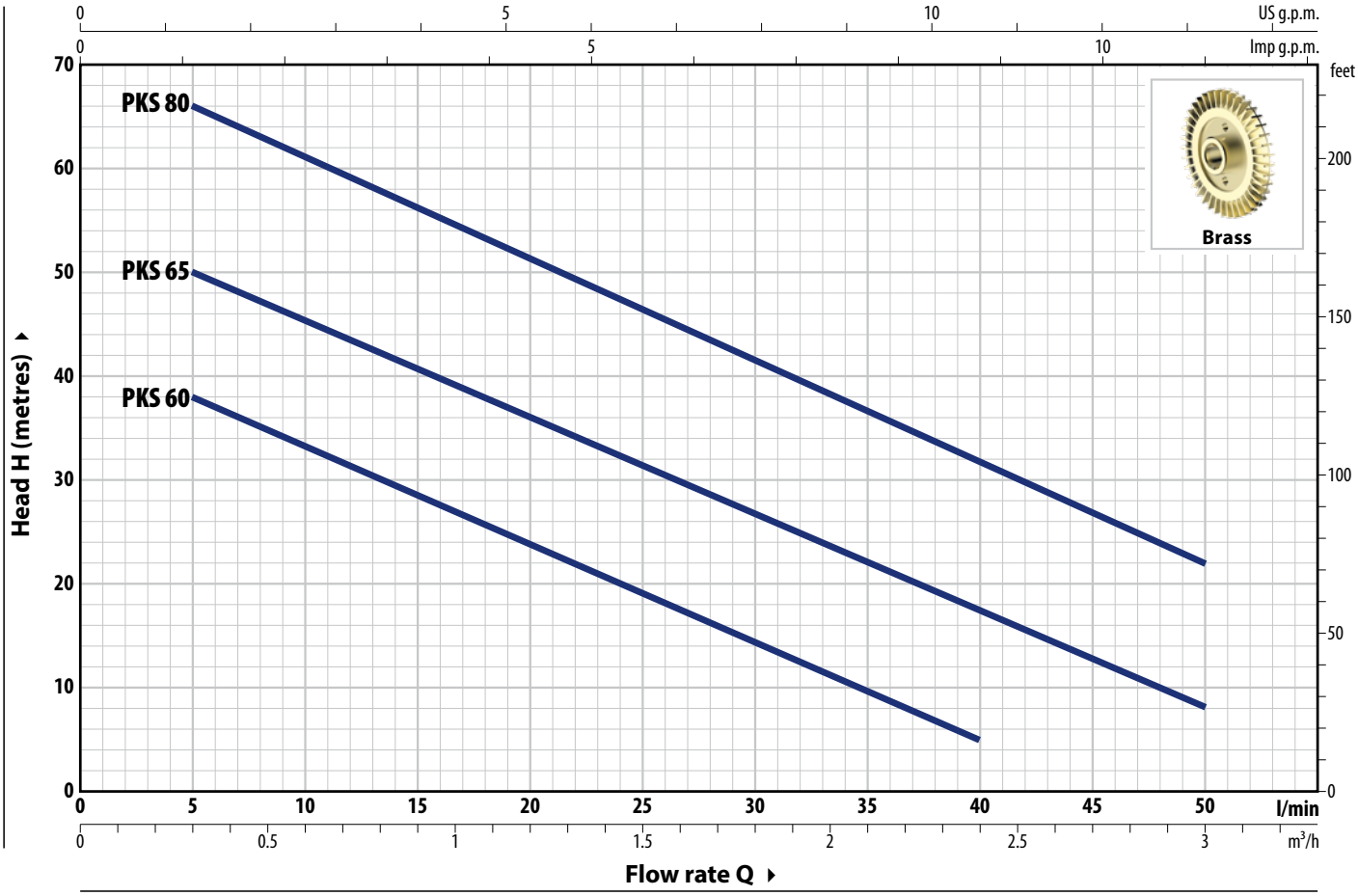

TYPE		POWER (P2)				Q m³/h	0	0.3	0.6	0.9	1.2	1.5	1.8	2.1	2.4	2.7	3.0
Single-ph.	**Three-ph.**	**kW**	**HP**	**1~**	**3~**	l/min	**0**	**5**	**10**	**15**	**20**	**25**	**30**	**35**	**40**	**45**	**50**
PKSm 60	**PKS 60**	0.30	0.40				40	38	33.5	29	24	19.5	15	10	5		
PKSm 65	**PKS 65**	0.55	0.75	**IE2**	**IE3**	**H** metres	55	50	45.5	40.5	36	31	27	22	17	12.5	8
PKSm 80	**PKS 80**	0.75	1				70	66	61	56	51	46	41	36.5	31	27	22

Q = Flow rate **H** = Total manometric head **HS** = Suction height

Performance curves comply with EN ISO 9906 Grade 3B tolerance limits.

EXAMPLE OF INSTALLATION

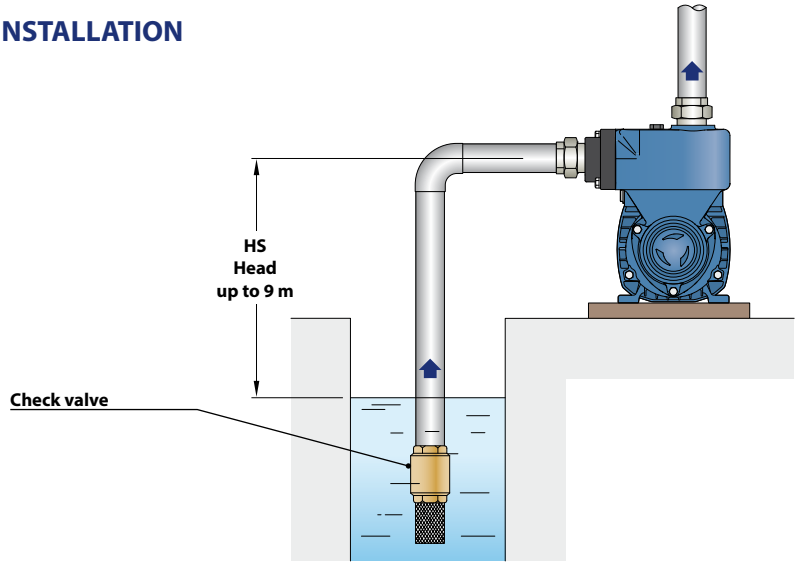

ABSORPTION

TYPE **Single-phase**	VOLTAGE **230 V**
PKSm 60	2.3 A
PKSm 65	3.7 A
PKSm 80	5.2 A

TYPE **Three-phase**	VOLTAGE **230 V - Δ**	**400 V - ⅄**
PKS 60	2.0 A	1.15 A
PKS 65	2.9 A	1.7 A
PKS 80	3.8 A	2.2 A

DIMENSIONS AND WEIGHT

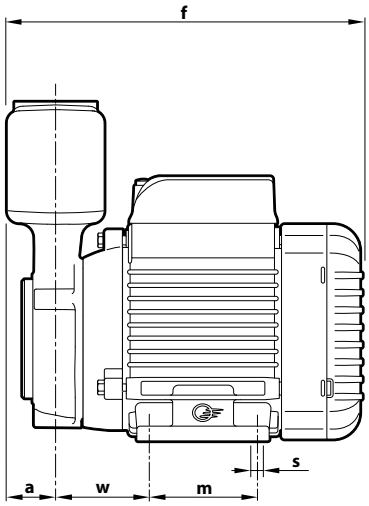

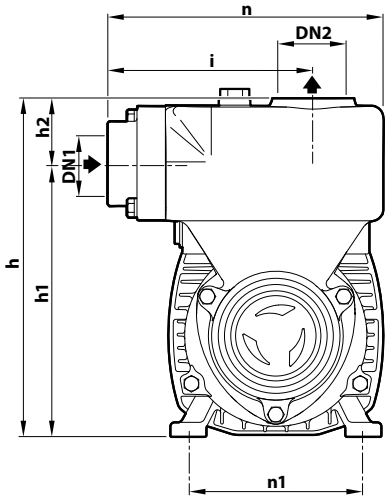

TYPE		PORTS		DIMENSIONS mm											kg	
Single-ph.	**Three-ph.**	**DN1**	**DN2**	a	f	h	h1	h2	i	m	n	n1	w	s	1~	3~
PKSm 60	**PKS 60**				196	183	149			55		93-100			5.6	5.6
PKSm 65	**PKS 65**	**1"**	**1"**	28	227	190	156	34	110	80	148	100	53	7	7.6	6.9
PKSm 80	**PKS 80**				263	198	164			90	160	112	62		10.6	10.6

PALLET CAPACITY

TYPE **Single-ph.**	 **Three-ph.**	NO. OF PUMPS
PKSm 60	**PKS 60**	224
PKSm 65	**PKS 65**	168
PKSm 80	**PKS 80**	96

CONSTRUCTION FEATURES

1	**Pump body**	Cast iron with ISO 228/1 threaded ports
2	**Check valve**	Built-in check valve in the inlet port
3	**Motor bracket**	Aluminum with brass cover and front scraping anti-locking function (patented)
4	**Impeller**	Brass, radial peripheral vane type

5 Mechanical seal

Seal	Shaft	Materials
AR-12	Ø 12 mm	Ceramic / Graphite / NBR

6	**Motor shaft**	Stainless steel **AISI 431** (EN 10088-3 - 1.4104 for PKS 60, PKS 65)

7 Electric motor

PKSm: single-phase 230 V - 50 Hz with winding integrated thermal motor protection.
PKS: three-phase 230/400 V - 50 Hz

※ Pumps are equipped with high-efficiency motors (IEC 60034-30-1)
class **IE2** for single-phase models
class **IE3** for three-phase models

- Continuous running duty **S1**
- Insulation: class F
- Protection rating: IP X4

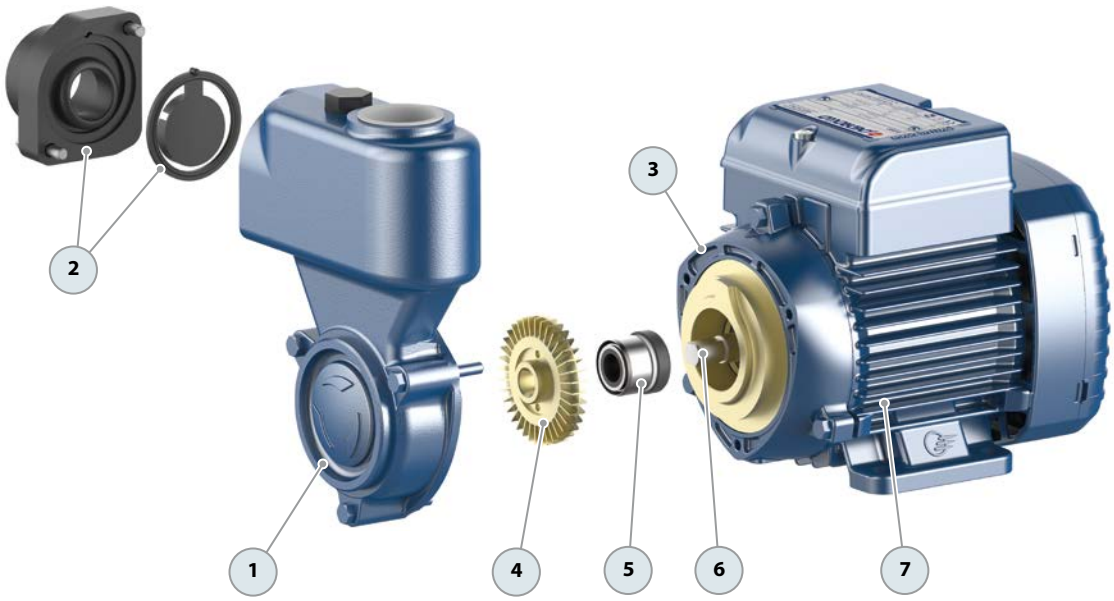

CK Self-priming liquid ring electric pumps

Clean water Agricultural use

INSTALLATION AND USE

Designed for pumping diesel/naphtha and clean water free from abrasive particles and non-corrosive liquids that do not harm the pump's components.

Their specific operating mechanism makes them an excellent solution when a compact self-priming pump is required or when the flow of the liquid is irregular or mixed with air.

APPLICATION LIMITS

- Suction head up to **9 m** (HS)
- Liquid temperature between **-10 °C** and **+90 °C**
- Temperature for diesel/naphta up to **+55 °C**
- Ambient temperature up to **+40 °C**
- Maximum working pressure **6 bar**

AVAILABLE UPON REQUEST

※ Mechanical seal options available

CURVES AND PERFORMANCE DATA – HS=0 m 50 Hz

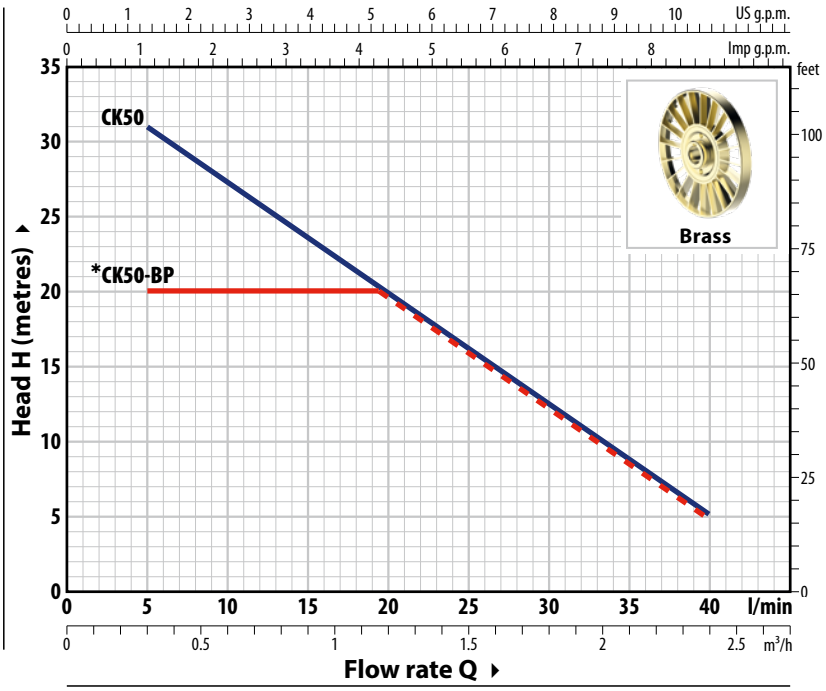

(*) CK 50-BP = performance curve with by-pass

ABSORPTION

TYPE Single-ph.	VOLTAGE 230 V
CKm 50	3.0 A
CKm 50-BP	2.7 A

TYPE Three-ph.	VOLTAGE 230 V - Δ	400 V - ⅄
CK 50	2.1 A	1.2 A
CK 50-BP	1.7 A	1.0 A

TYPE Single-ph.	TYPE Three-ph.	POWER (P2) kW	POWER (P2) HP	1~	3~	Q									
						m³/h	0	0.3	0.6	0.9	1.2	1.5	1.8	2.1	2.4
						l/min	**0**	**5**	**10**	**15**	**20**	**25**	**30**	**35**	**40**
CKm 50	**CK 50**	0.37	0.50	IE2	IE3	H metres	35	31	27	24	20	16	13	9	5
CKm 50-BP	**CK 50-BP**	0.25	0.33				20	20	20	20	20	16	13	9	5

Q = Flow rate **H** = Total manometric head **HS** = Suction height

Performance curves comply with EN ISO 9906 Grade 3B tolerance limits.

DIMENSIONS (mm)

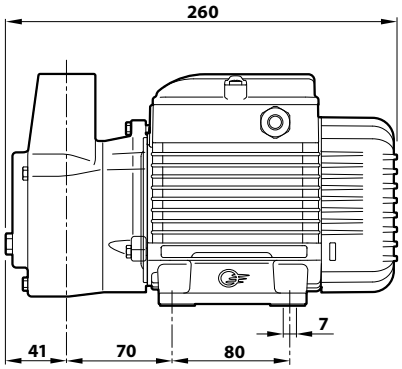

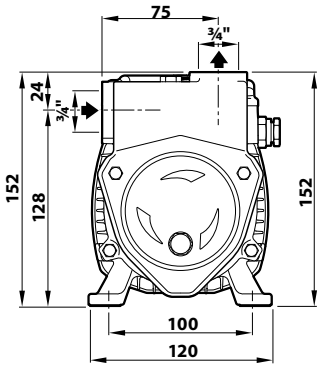

TYPE		PORTS		WEIGHT (kg)		PALLET CAPACITY
Single-phase	**Three-phase**	**DN1**	**DN2**	1~	3~	
CKm 50	**CK 50**	**¾"**	**¾"**	7.3	7.3	160

CONSTRUCTION FEATURES

1	**Pump body**	Cast iron with ISO 228/1 threaded ports
2	**Motor bracket**	Aluminium with brass cover with front anti-locking shim function (patented)
3	**Impeller**	Brass with open radial vanes
4	**Mechanical seal**	Type: **AR-12V** — Materials: Ceramic / Graphite / Viton
5	**Shaft**	Stainless steel **AISI 431**
6	**Electric motor**	**CKm**: single-phase 230 V - 50 Hz with winding integrated thermal motor protection. **CK**: three-phase 230/400 V - 50 Hz ※ Pumps are equipped with high-efficiency motors (IEC 60034-30-1) class **IE2** for single-phase models class **IE3** for three-phase models – Continuous running duty **S1** – Insulation: class F – Protection rating: IP X4

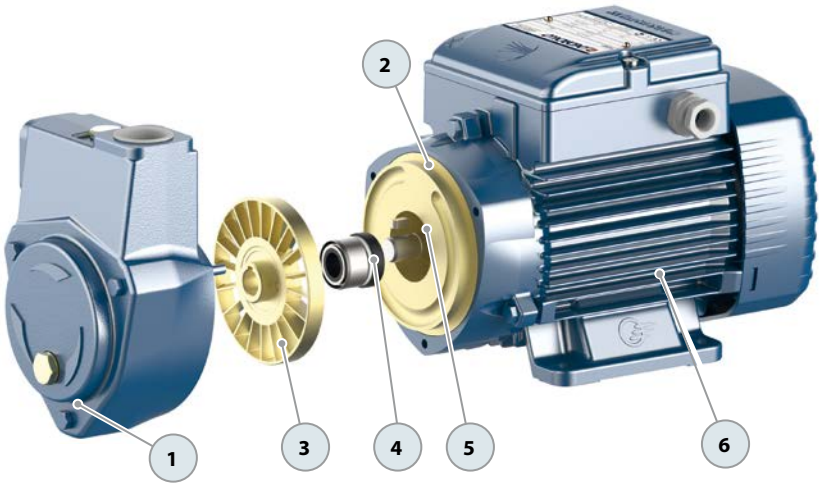

CKR Self-priming liquid ring electric pumps

Clean water
Domestic use
Industrial use
Agricultural use

※ **With double anti-lock front scraping**

INSTALLATION AND USE

Designed for pumping diesel/naphtha and clean water free from abrasive particles and non-corrosive liquids that do not harm the pump's components.

Their specific operating mechanism makes them an excellent solution when a compact self-priming pump is required or when the flow of the liquid is irregular or mixed with air.

APPLICATION LIMITS

- Suction head up to **9 m** (HS)
- Liquid temperature between **-10 °C** and **+90 °C**
- Ambient temperature up to **+40 °C**
- Maximum working pressure **6 bar**

AVAILABLE UPON REQUEST

※ Mechanical seal options available
※ Specific voltages
※ Protection rating: IP 55

PATENTS - TRADE MARKS - MODELS

- Motor bracket: Patent No. IT1243605

CURVES AND PERFORMANCE DATA – HS=0 m 50 Hz

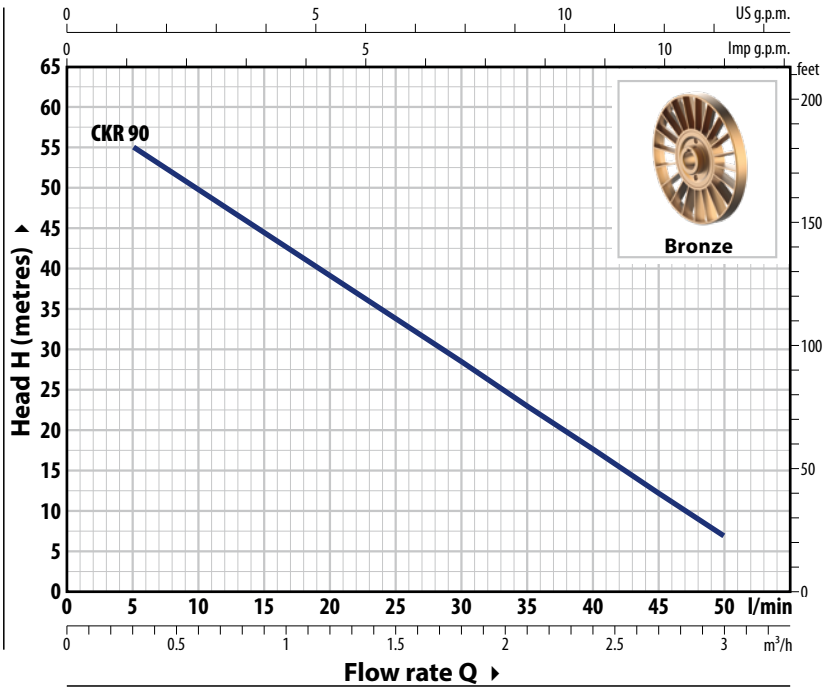

ABSORPTION

TYPE	VOLTAGE
Single-ph.	**230 V**
CKRm 90	5.7 A

TYPE	VOLTAGE	
Three-ph.	**230 V - Δ**	**400 V - ⅄**
CKR 90	4.0 A	2.3 A

TYPE		POWER (P2)				Q	m³/h	0	0.3	0.6	0.9	1.2	1.5	1.8	2.1	2.4	2.7	3.0
Single-ph.	**Three-ph.**	**kW**	**HP**	**1~**	**3~**		l/min	**0**	**5**	**10**	**15**	**20**	**25**	**30**	**35**	**40**	**45**	**50**
CKRm 90	**CKR 90**	0.75	1	**IE2**	**IE3**	**H**	metres	60	55	49.7	44.3	39	33.7	28.3	23	17.7	12.3	7

Q = Flow rate **H** = Total manometric head **HS** = Suction height

Performance curves comply with EN ISO 9906 Grade 3B tolerance limits.

DIMENSIONS (mm)

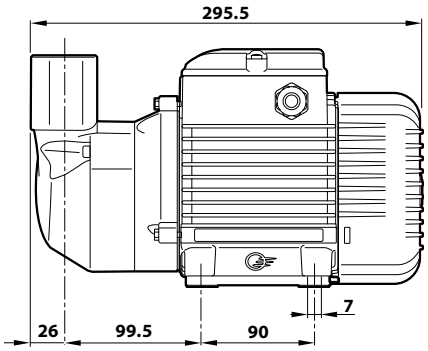

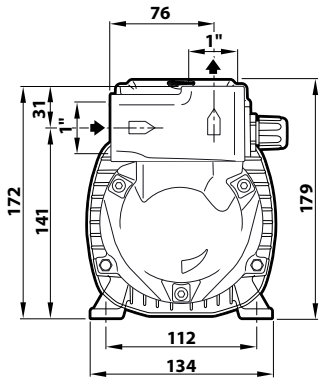

TYPE		PORTS		WEIGHT (kg)		PALLET CAPACITY
Single-phase	**Three-phase**	**DN1**	**DN2**	1~	3~	
CKRm 90	**CKR 90**	**1"**	**1"**	12.0	12.0	119

CONSTRUCTION FEATURES

1	**Pump body**	Cast iron, with **stainless-steel** front shaving surface to prevent the impeller from locking due to oxidation. The pump body is equipped with ISO 228/1 threaded ports
2	**Motor bracket**	Aluminium with brass cover with front anti-locking shim function (patented)
3	**Impeller**	Bronze, star-type with open radial vanes
4	**Mechanical seal**	Type: **AR-12V** — Materials: Ceramic / Graphite / Viton
5	**Shaft**	Stainless steel **AISI 431**
6	**Electric motor**	**CKRm**: single-phase 230 V - 50 Hz with winding integrated thermal motor protection **CKR**: three-phase 230/400 V - 50 Hz ※ Pumps are equipped with high-efficiency motors (IEC 60034-30-1) class **IE2** for single-phase models class **IE3** for three-phase models – Continuous running duty **S1** – Insulation: class F – Protection rating: IP X4

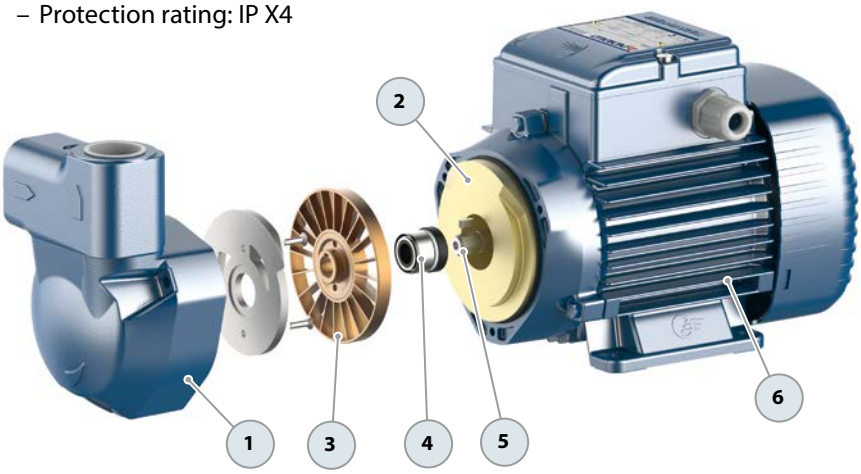

PQ-Bs Peripheral pumps with brass pump body

Clean water

Industrial use

※ **Electric pumps for industrial use**

PERFORMANCE RANGE

- Flow rate up to **50 l/min** (3.0 m³/h)
- Head up to **95 m**

INSTALLATION AND USE

Designed for pumping diesel/naphtha and **clean water** free from abrasive particles and non-corrosive liquids that do not harm the pump's components.

Their hydraulic characteristics, compactness, and small size make them ideal for industrial applications such as chillers, air conditioners, coolers, and boiler feed systems.

PUMP BODY

The **pump body** is made of **CW617N brass**, which guarantees protection against rust and oxidation.

APPLICATION LIMITS

- Manometric suction head up to **8 m**
- Liquid temperature between **-10 °C** and **+90 °C**
- Ambient temperature between **-10 °C** and **+40 °C**
- Maximum working pressure **10 bar**

AVAILABLE UPON REQUEST

※ Mechanical seal options available
※ Protection rating IP 55 (only for PQ81-Bs and PQ65-Bs)
※ Different voltage requirements 60 Hz frequency

PATENTS - TRADE MARKS - MODELS

- Motor bracket: Patent No. IT1243605
- Community Model No. 009068877-0001

CURVES AND PERFORMANCE DATA – HS=0 m

50 Hz

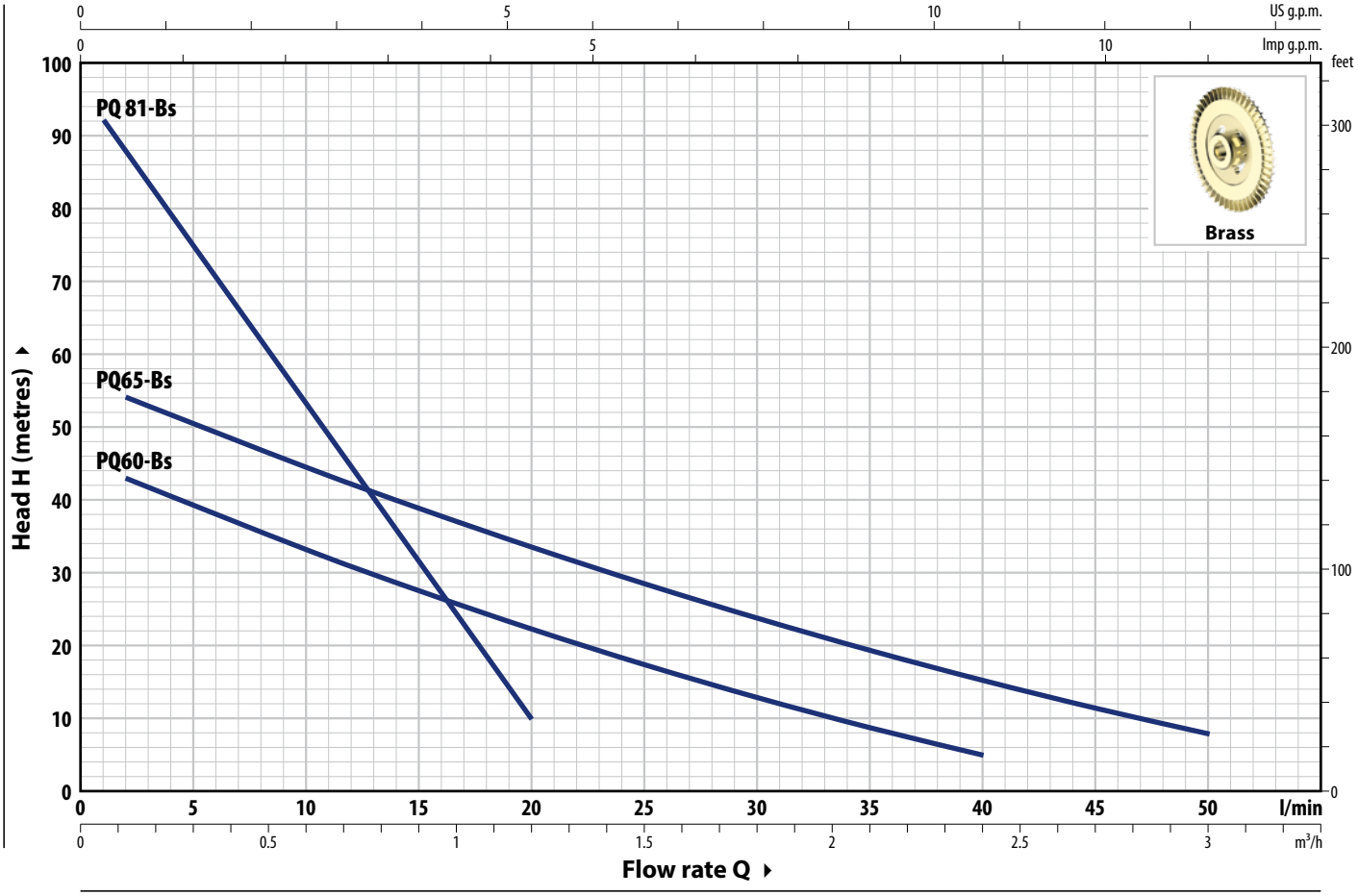

TYPE Single-ph.	TYPE Three-ph.	POWER (P2) kW	POWER (P2) HP	1~	3~	Q	m³/h	0	0.06	0.12	0.3	0.6	0.9	1.2	1.5	1.8	2.1	2.4	2.7	3.0
							l/min	**0**	**1**	**2**	**5**	**10**	**15**	**20**	**25**	**30**	**35**	**40**	**45**	**50**
PQm 60-Bs	**PQ 60-Bs**	0.30	0.40					45.5	–	43	39	33	27.5	22.3	17.4	12.9	8.8	5		
※ **PQm 65-Bs**	**PQ 65-Bs**	0.55	0.75	**IE2**	**IE3**	**H**	metres	56.5	–	54	50	44.5	39	33.5	28.5	23.8	19.4	15.3	11.5	8
PQm 81-Bs	**PQ 81-Bs**	0.55	0.75					95	92	87.5	75	53	31.5	10						

Q = Flow rate **H** = Total manometric head **HS** = Suction height

Performance curves comply with EN ISO 9906 Grade 3B tolerance limits.

ABSORPTION

TYPE Single-phase	VOLTAGE 230 V
PQm 60-Bs	2.3 A
PQm 65-Bs	3.7 A
PQm 81-Bs	3.5 A

TYPE Three-phase	VOLTAGE 230 V - Δ	VOLTAGE 400 V - ⅄
PQ 60-Bs	2.0 A	1.15 A
PQ 65-Bs	2.9 A	1.7 A
PQ 81-Bs	2.4 A	1.4 A

DIMENSIONS AND WEIGHT

PQ 60-Bs

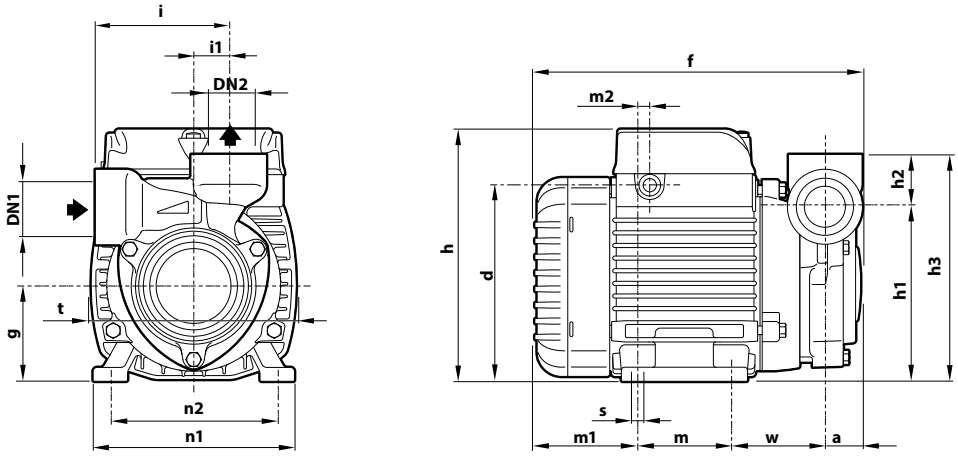

PQ 65-Bs – PQ 81-Bs

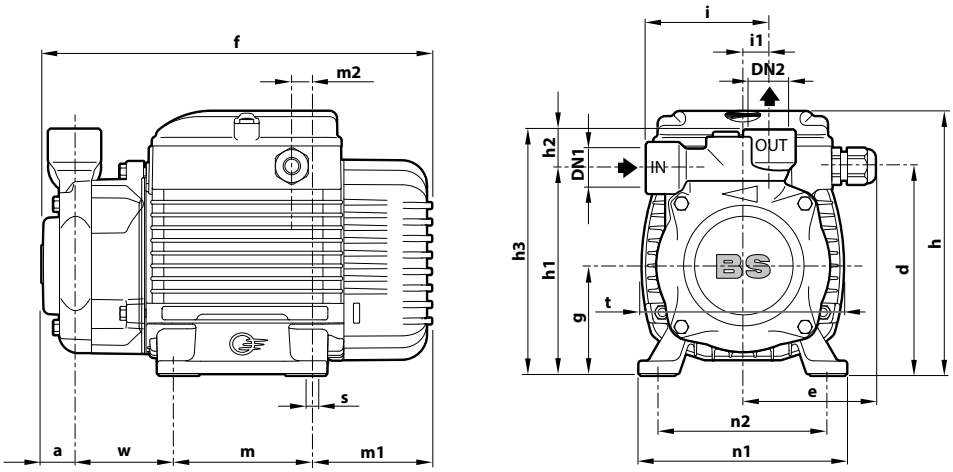

TYPE		PORTS		DIMENSIONS mm																			kg	
Single-ph.	**Three-ph.**	DN1	DN2	a	d	e	f	g	h	h1	h2	h3	i	i1	m	m1	m2	n1	n2	t	w	s	1~	3~
PQm 60-Bs	**PQ 60-Bs**	¾"	¾"	21.5	112	–	192	56	145.5	101	30	131	76	20	55	62	8	116	100	118	53.5	7	5.0	5.0
PQm 65-Bs	**PQ 65-Bs**			24	119.5	76.5	226	63	153	108		138			80	69	8.5	120		117			7.0	6.4
PQm 81-Bs	**PQ 81-Bs**	½"	½"	18			223			119	22	141	71	15							55		6.9	6.9

PALLET CAPACITY

TYPE		NO. OF PUMPS
Single-ph.	**Three-ph.**	
PQm 60-Bs	**PQ 60-Bs**	238
PQm 65-Bs	**PQ 65-Bs**	216
PQm 81-Bs	**PQ 81-Bs**	160

CONSTRUCTION FEATURES

1	**Pump body**	Brass with ISO 228/1 threaded ports
2	**Motor bracket**	Aluminium with brass cover with anti-lock front shim function (patented)
3	**Impeller**	Brass, radial peripheral vane type
4	**Mechanical seal**	Type: **ST1-12** — Materials: Silicon carbide / Graphite / NBR
5	**Motor shaft**	Stainless steel **AISI 431**
6	**Electric motor**	**PQm-Bs**: single-phase 230 V - 50 Hz with winding integrated thermal motor protection **PQ-Bs**: three-phase 230/40 V - 50 Hz ※ Pumps are equipped with high-efficiency motors (IEC 60034-30-1) class **IE2** for single-phase models class **IE3** for three-phase models – Continuous running duty **S1** – Insulation: class F – Protection rating: IP X4

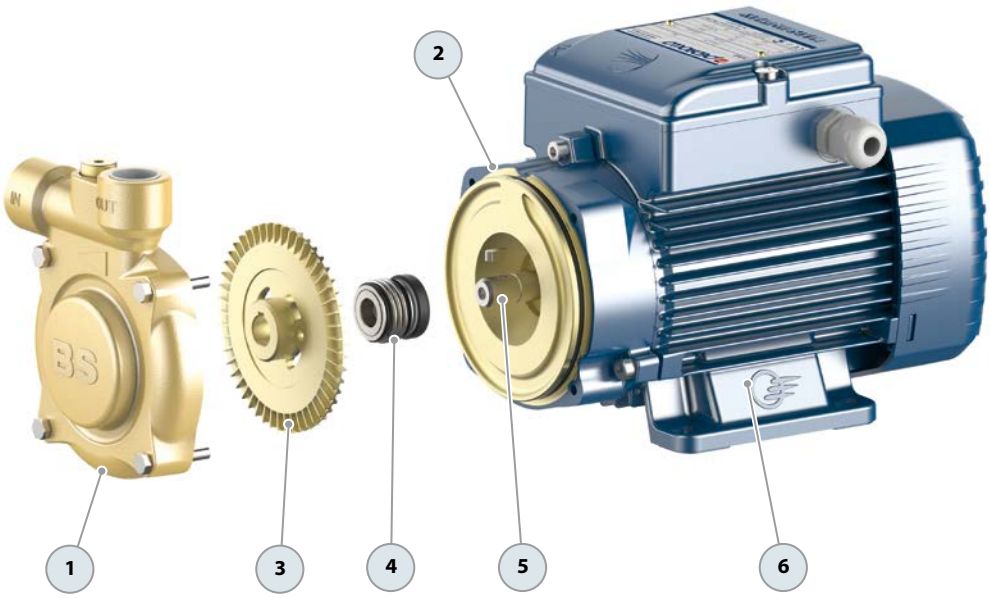

PQ 81-PPS

Peripheral pump with PPS pump body

Clean water **Industrial use**

※ **Pump for industrial use**

INSTALLATION AND USE

Designed to transfer clean water free from abrasive particles and liquids that will not damage the pump's components.
Its hydraulic characteristics and compactness make it suitable for **industrial applications**.

PUMP BODY

The material used for the **pump body** is a **PPS-based** technopolymer reinforced with glass fibre, which gives it excellent mechanical properties.

APPLICATION LIMITS

- Manometric suction head up to **8 m**
- Liquid temperature between **-10 °C** and **+90 °C**
- Ambient temperature between **-10 °C** and **+40 °C**
- Maximum working pressure **10 bar**

AVAILABLE UPON REQUEST

※ Mechanical seal options available
※ IP 55 protection rating
※ Different voltage requirements 60 Hz frequency

CURVES AND PERFORMANCE DATA – HS=0 m 50 Hz

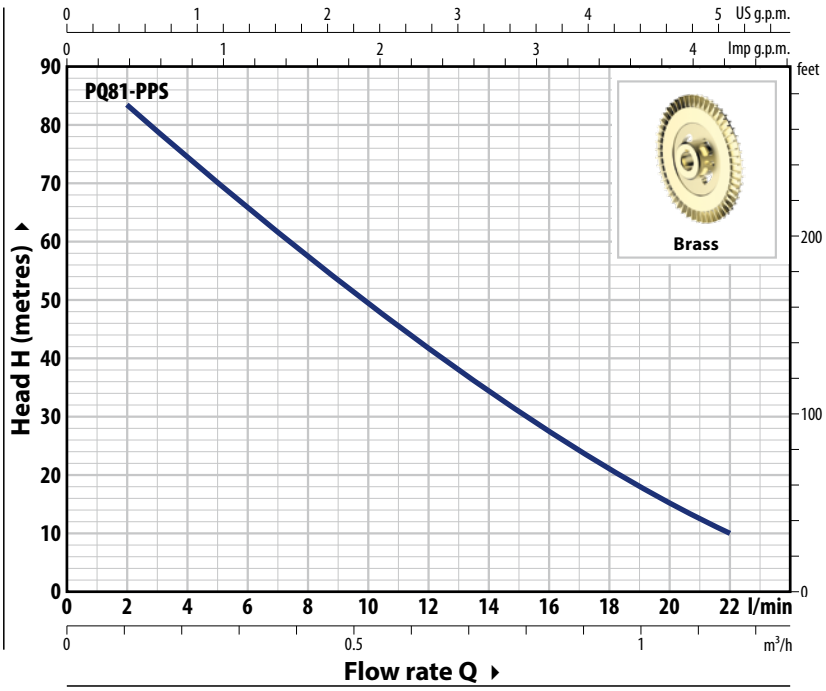

ABSORPTION

TYPE	VOLTAGE
Single-phase	**230 V**
PQm 81-PPS	3.5 A

TYPE	VOLTAGE	
Three-phase	**230 V - Δ**	**400 V - ⅄**
PQ 81-PPS	2.4 A	1.4 A

TYPE		POWER (P2)																
Single-ph.	**Three-ph.**	**kW**	**HP**	**1~**	**3~**	**Q**	m³/h	0	0.12	0.24	0.36	0.48	0.60	0.72	0.84	0.96	1.08	1.2	1.32
							l/min	**0**	**2**	**4**	**6**	**8**	**10**	**12**	**14**	**16**	**18**	**20**	**22**
PQm 81-PPS	**PQ 81-PPS**	0.55	0.75	**IE2**	**IE3**	**H**	metres	90	83.5	74.5	66.5	57.5	49	41	35	28	22	15	10

Q = Flow rate **H** = Total manometric head **HS** = Suction height

Performance curves comply with EN ISO 9906 Grade 3B tolerance limits.

※ **Start of production 04.2024** ※

DIMENSIONS (mm)

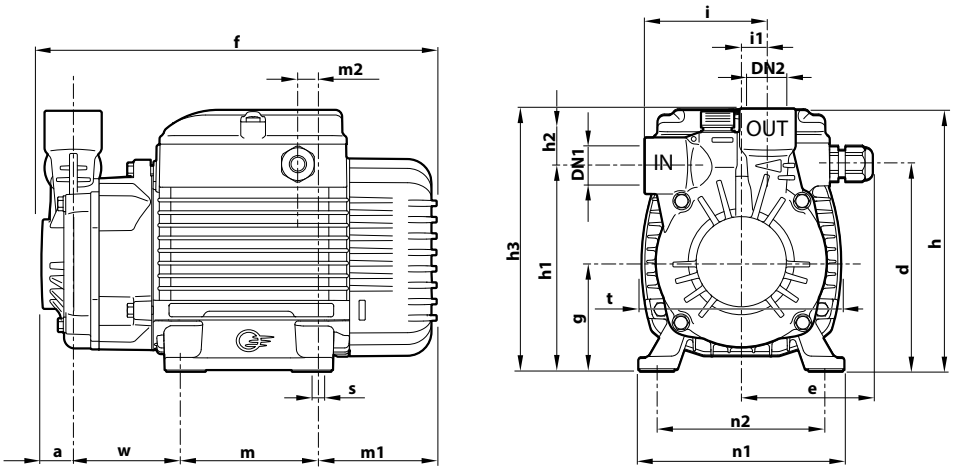

TYPE		PORTS		DIMENSIONS mm																			kg	
Single-phase	**Three-phase**	DN1	DN2	a	d	e	f	g	h	h1	h2	h3	i	i1	m	m1	m2	n1	n2	t	w	s	1~	3~
PQm 81-PPS	**PQ 81-PPS**	**½"**	**½"**	18.5	119.5	76.5	223	63	163	119	33	152	71	15	80	69	8.5	120	100	117	61	7	6.5	6.5

CONSTRUCTION FEATURES

1	**Pump body**	**PPS**, with ISO 228/1 threaded brass inserted in ports
2	**Motor bracket**	Aluminium with brass cover with front anti-locking shim function
3	**Impeller**	Brass
4	**Mechanical seal**	Type / Materials **ST1-12** / Silicon carbide / Graphite / NBR
5	**Shaft**	Stainless steel **AISI 431**
6	**Electric motor**	**PQm-PPS**: single-phase 230 V - 50 Hz with winding integrated thermal motor protection. **PQ-PPS**: three-phase 230/40 V - 50 Hz ※ Pumps are equipped with high-efficiency motors (IEC 60034-30-1) class **IE2** for single-phase models class **IE3** for three-phase models – Continuous running duty **S1** – Insulation: class F – Protection rating: IP X4

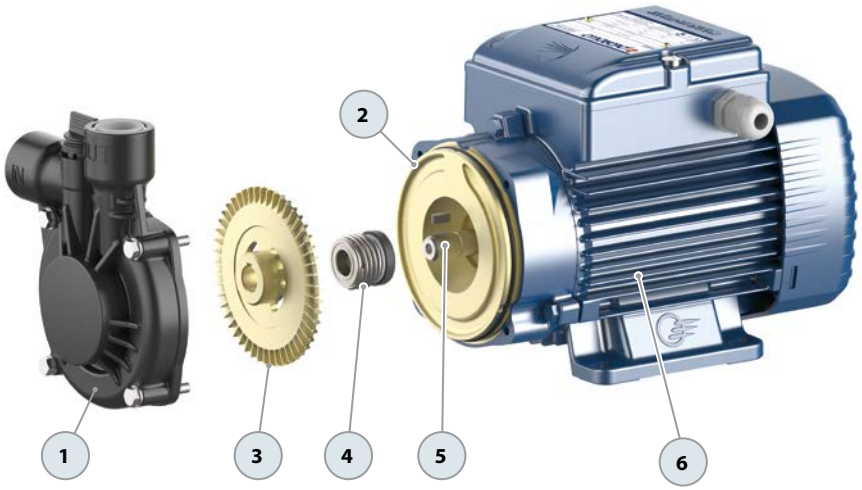

PQA Peripheral impeller pumps with a PPS pump body

Clean water **Industrial use**

INSTALLATION AND USE

The **PQA** electric pumps are designed to transfer clean water free from abrasive particles and non-corrosive liquids that do not harm the pump's components. Made from PPS with a brass impeller front cover, ensuring protection against rust and oxidation, they are suited for various industrial applications, such as cooling, air conditioning, and ironing systems.

APPLICATION LIMITS

- Manometric suction head up to **8 m**
- Liquid temperature between **-10 °C** and **+90 °C**
- Ambient temperature between **-10 °C** and **+40 °C** (**+50 °C** for PQA 60)
- Maximum working pressure **10 bar**

AVAILABLE UPON REQUEST

※ Mechanical seal options available
※ Shaft in AISI 316 stainless steel - EN 10088-3 - 1.4401
※ Protection rating IP X5 for PQA 70-90
※ Different voltage requirements 60 Hz frequency

PATENTS - TRADE MARKS - MODELS

- Motor bracket: Patent No. IT1243605
- Shaft: Patent No. 0000275945 (PQA 50)

CURVES AND PERFORMANCE DATA – HS=0 m 50 Hz

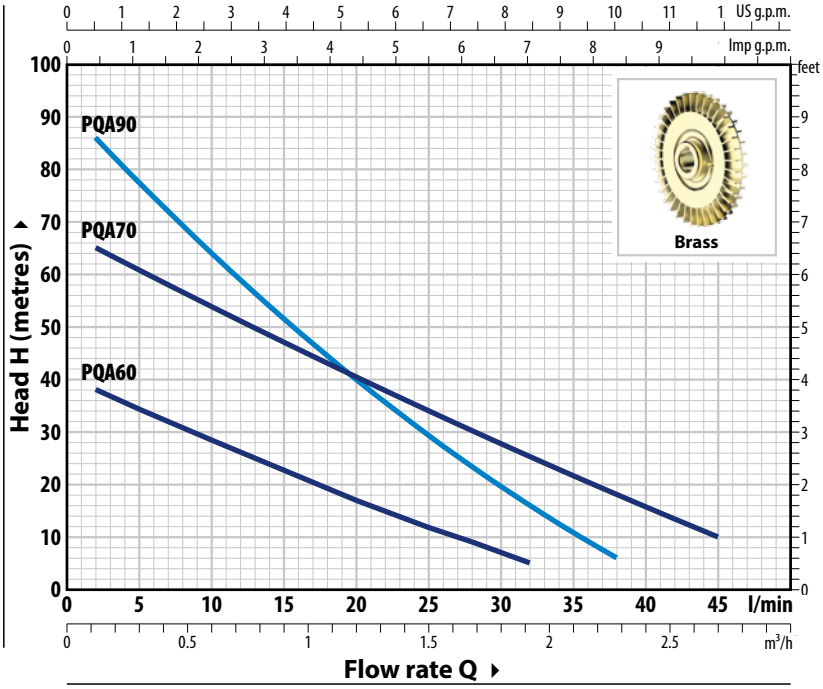

ABSORPTION

TYPE	VOLTAGE
Single-ph.	**230 V**
PQAm 60	2.3 A
PQAm 70	6.2 A
PQAm 90	5.6 A

TYPE	VOLTAGE	
Three-ph.	**230 V - Δ**	**400 V - ⅄**
PQA 60	2.0 A	1.15 A
PQA 70	4.2 A	2.4 A
PQA 90	4.2 A	2.4 A

TYPE		POWER (P2)				Q	m³/h	0	0.12	0.3	0.6	0.9	1.2	1.5	1.68	1.8	1.92	2.28	2.46	2.7
Single-phase	**Three-phase**	**kW**	**HP**	**1~**	**3~**		l/min	0	**2**	**5**	**10**	**15**	**20**	**25**	**28**	**30**	**32**	**38**	**41**	**45**
PQAm 60	**PQA 60**	0.30	0.40					40.5	38	34	28	22.5	17	11.8	8.8	6.9	5			
PQAm 70	**PQA 70**	0.55	0.75	**IE2**	**IE3**	**H**	metres	68	65	61	54	47	40.5	34	30	27.5	25.3	18.1	14.6	10
PQAm 90	**PQA 90**	0.75	1					92	86	78	64	51.5	40	29.5	23.4	19.6	16	6		

Q = Flow rate **H** = Total manometric head **HS** = Suction height

Performance curves comply with EN ISO 9906 Grade 3B tolerance limits.

DIMENSIONS AND WEIGHT

PQA 60

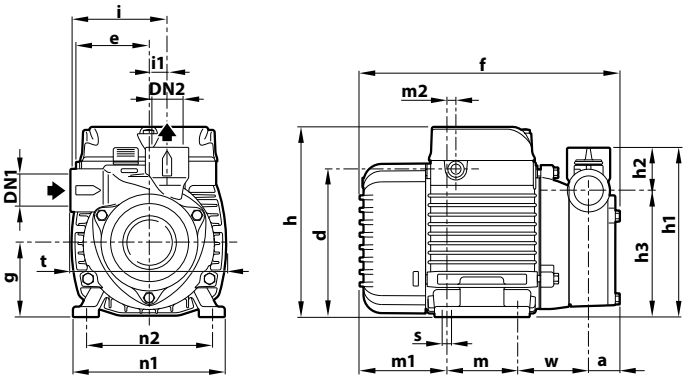

PQA 70, PQA 90

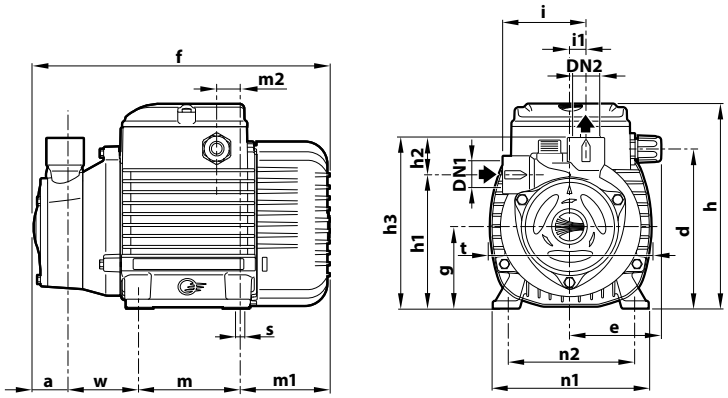

TYPE		PORTS		DIMENSIONS mm																			kg	
Single-ph.	**Three-ph.**	**DN1**	**DN2**	a	d	e	f	g	h	h1	h2	h3	i	i1	m	m1	m2	n1	n2	t	w	s	1~	3~
PQAm 60	**PQA 60**			23	112	55.5	196	56	145	96	33	129			55	65	8	116	97	117	53		4.6	4.6
PQAm 70	**PQA 70**	**½"**	**½"**	28	139	79	261	71	179	116.5	32.5	149	72.5	13.5	90	80.5	22	134	112	142	62.5	7	9.6	9.6
PQAm 90	**PQA 90**			26.5			260			121	35	156	76	16							62		9.7	9.7

PALLET CAPACITY

TYPE		NO. OF PUMPS
Single-ph.	**Three-ph.**	
PQAm 60	**PQA 60**	238
PQAm 70	**PQA 70**	102
PQAm 90	**PQA 90**	102

CONSTRUCTION FEATURES

1	**Pump body**	**PPS**, with ISO 228/1 threaded metal inserted in ports
2	**Cover**	Brass
3	**Motor bracket**	Aluminium with brass cover with front anti-locking shim function (patented)
4	**Impeller**	Brass, radial peripheral vane type
5	**Mechanical seal**	Type / Materials **ST1-12** / Silicon carbide / Graphite / NBR
6	**Motor shaft**	Stainless steel **AISI 431**
7	**Electric motor**	**PQAm**: single-phase 230 V - 50 Hz with winding integrated thermal motor protection. **PQA**: three-phase 230/400 V - 50 Hz ※ Pumps are equipped with high-efficiency motors (IEC 60034-30-1) class **IE2** for single-phase models class **IE3** for three-phase models – Continuous running duty **S1** – Insulation: class F – Protection rating: IP X4

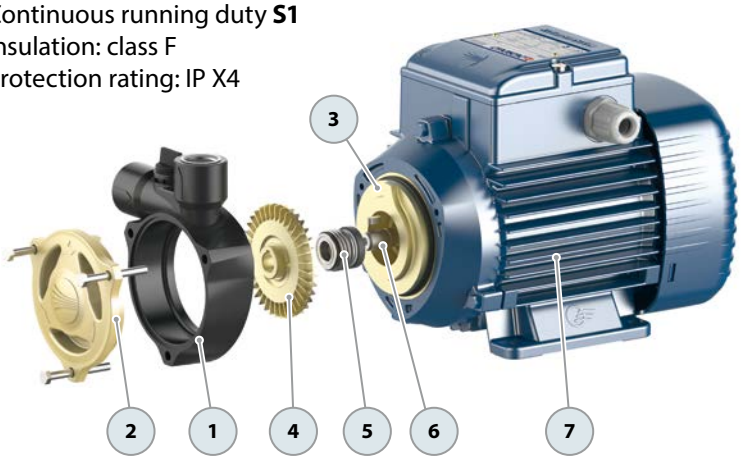

PV Peripheral pumps with brass pump body

Clean water

Industrial use

PERFORMANCE RANGE

- Flow rate up to **45 l/min** (2.7 m³/h)
- Head up to **105 m**

INSTALLATION AND USE

Designed to transfer clean water free from abrasive particles and liquids that will not damage the pump's components.

The construction features of these compact brass pumps ensure protection against rust and oxidation and are suited for various industrial applications, such as **cooling and air conditioning**.

ELECTRIC MOTOR

Equipped with cutting-edge electric motors, the three-phase pumps are designed to work with inverters, offering stable and noiseless performance.

They feature efficiency class **IE3** for three-phase motors and **IE2** for single-phase motors, bolstered by class F insulation and IPX4 protection.

APPLICATION LIMITS

- Manometric suction head up to **8 m**
- Liquid temperature between **-10 °C** and **+90 °C**
- Ambient temperature between **-10 °C** and **+50 °C**
- Maximum working pressure **10 bar**

AVAILABLE UPON REQUEST

※ Mechanical seal options available
※ Protection rating IP X5 for PV70-90
※ Different voltage requirements 60 Hz frequency

※ **The pump body can be rotated**

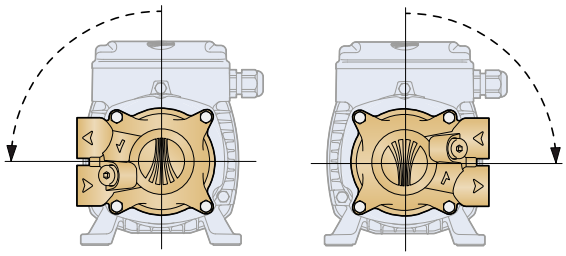

CURVES AND PERFORMANCE DATA – HS=0 m

50 Hz

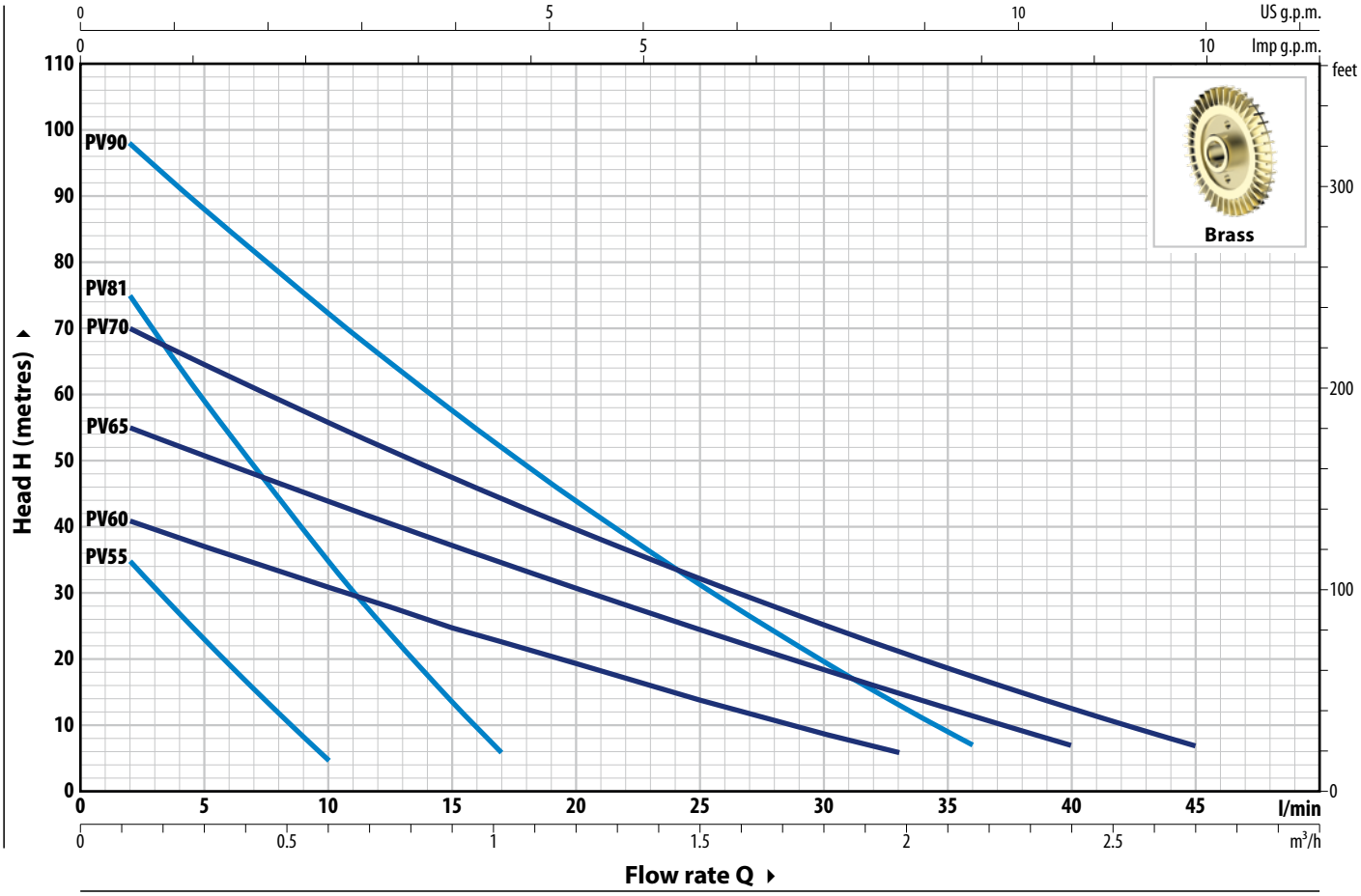

TYPE		POWER (P2)				Q	m³/h	0	0.12	0.18	0.24	0.3	0.36	0.42	0.48	0.54	0.6	0.66	0.72
Single-ph.	Three-ph.	kW	HP	1~	3~		l/min	**0**	**2**	**3**	**4**	**5**	**6**	**7**	**8**	**9**	**10**	**11**	**12**
PVm 55	**PV 55**	0.18	0.25	**IE2**	**IE3**	**H** metres	**50 Hz**	43	35	31	27	23.2	19.4	15.7	12	8.5	5		
							60 Hz	56	46	41	36.5	32	27.5	23.4	19.4	15.5	11.9	8.3	5

※ The PVm55 and PV55 pump is designed to operate at 50 and 60 Hz

TYPE		POWER (P2)				Q	m³/h	0	0.12	0.3	0.6	0.9	1.02	1.2	1.5	1.8	1.98	2.16	2.4	2.7
Single-ph.	Three-ph.	kW	HP	1~	3~		l/min	**0**	**2**	**5**	**10**	**15**	**17**	**20**	**25**	**30**	**33**	**36**	**40**	**45**
PVm 60	**PV 60**	0.37	0.50					44	41	37	31	25	22.7	19.4	14	8.9	6			
PVm 81	**PV 81**	0.37	0.50					86	75	59	35	13.7	6							
PVm 65	**PV 65**	0.55	0.75	**IE2**	**IE3**	**H**	metres	58	55	51	44	37	34.5	31	24.5	18.5	14.9	11.5	7	
PVm 70	**PV 70**	0.75	1					74	70	64.5	56	47.5	44.5	39.5	32	25.3	21.3	17.5	12.7	7
PVm 90	**PV 90**	0.75	1					105	98	88	72.5	57.5	52	44	31	19.6	13.1	7		

Q = Flow rate **H** = Total manometric head **HS** = Suction height

Performance curves comply with EN ISO 9906 Grade 3B tolerance limits.

ABSORPTION

TYPE	VOLTAGE
Single-phase	**230 V**
PVm 55 (50 Hz)	1.6 A
PVm 55 (60 Hz)	2.0 A
PVm 60	2.8 A
PVm 81	3.0 A
PVm 65	4.4 A
PVm 70	6.3 A
PVm 90	6.3 A

TYPE	VOLTAGE	
Three-phase	**230 V - Δ**	**400 V - ⅄**
PV 55 (50 Hz)	1.5 A	0.9 A
PV 55 (60 Hz)	1.2 A	0.7 A
PV 60	2.1 A	1.2 A
PV 81	2.1 A	1.2 A
PV 65	2.6 A	1.5 A
PV 70	4.2 A	2.4 A
PV 90	4.2 A	2.4 A

DIMENSIONS AND WEIGHT

PV 55

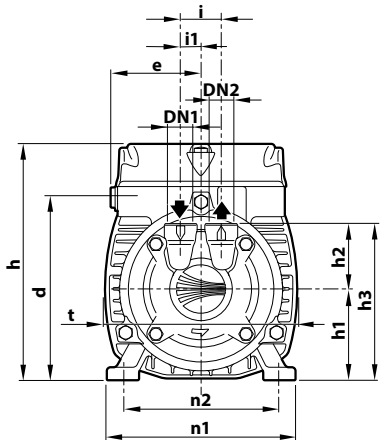

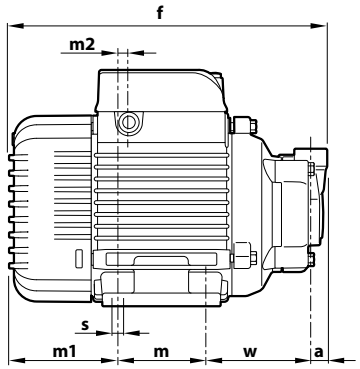

PV 60-81-65-70-90

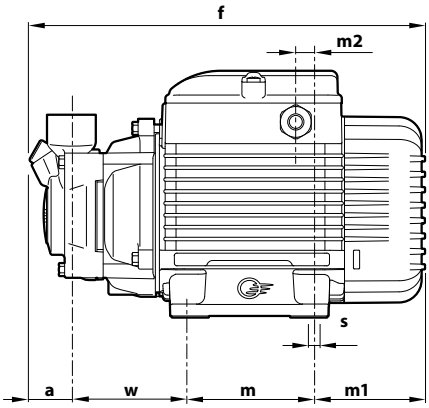

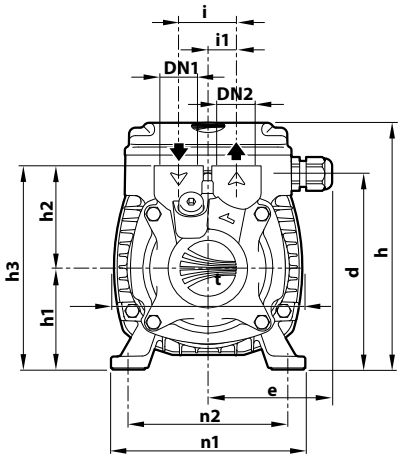

TYPE		PORTS		DIMENSIONS mm																		kg	
Single-ph.	**Three-ph.**	**DN1**	**DN2**	a	d	e	f	h	h1	h2	h3	i	i1	m	m1	m2	n1	n2	t	w	s	1~	3~
PVm 55	**PV 55**	**¼"**	**¼"**	10.5	112	55.5	194	145	56	40	96	25	12.5	55	65.5	8	116	94/100	116	63	7	4.4	4.3
PVm 60	**PV 60**	**½"**	**½"**	26			243.5			62	125	35	17.5							68		5.5	5.4
PVm 81	**PV 81**			26.5	120.5	76	241	152	63	65	128			80	69.5	11.5	120	98/102	116	65		6.9	6.9
PVm 65	**PV 65**	**¾"**	**¾"**	27			243.5			66	129	45								67	7	6.7	6.7
PVm 70	**PV 70**			26.5	139	79	276	180	71	66	137	45	22.5	90	80.5	22	134	110/114	141	79		10.2	9.7
PVm 90	**PV 90**			28			275													76.5		10.0	9.4

(*) h=196 mm for single-phase 110 V versions

CONSTRUCTION FEATURES

1	**Pump body**	Brass, equipped with ISO 228/1 threaded ports
2	**Seal cover**	Brass
3	**Motor bracket**	Aluminum
4	**Impeller**	Brass, radial peripheral vane type
5	**Mechanical seal**	Type: **ST1-12**; Shaft: Ø 12 mm; Materials: Silicon carbide / Graphite / NBR
6	**Motor shaft**	Stainless steel **AISI 431**
7	**Electric motor**	**PVm**: single-phase 230 V - 50 Hz (50/60 Hz for PVm55) with winding integrated thermal motor protection. **PV**: three-phase 230/400 V - 50 Hz (50/60 Hz for PV55). ※ Pumps are equipped with high-efficiency motors (IEC 60034-30-1) class **IE2** for single-phase models class **IE3** for three-phase models Continuous running duty **S1**

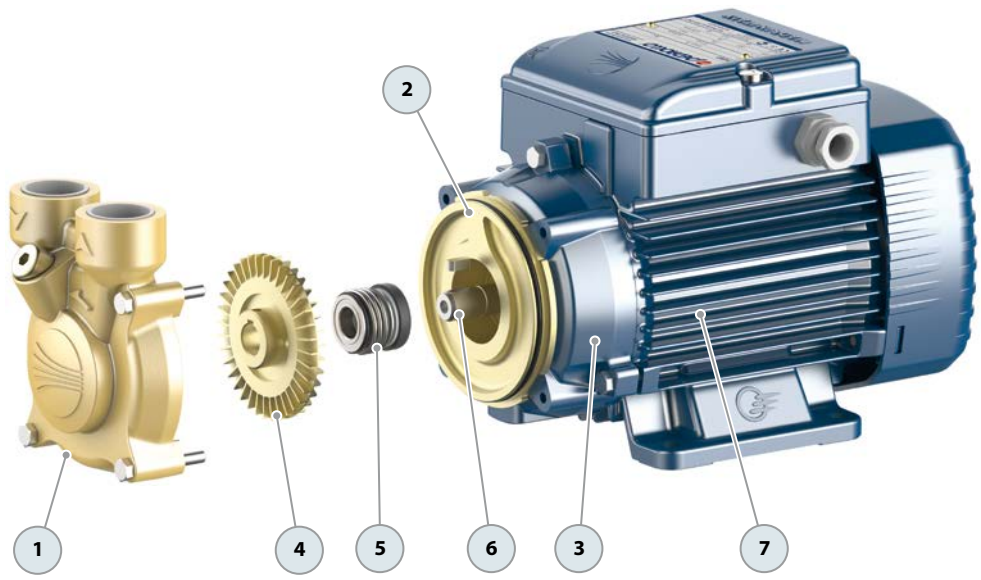

PQ 3000 Peripheral impeller pumps

Clean water **Industrial use**

INSTALLATION AND USE

- Designed to transfer clean water free from abrasive particles and liquids that will not damage the pump's components.
- Its hydraulic characteristics make it suitable for **industrial applications**.
- **PQ3000** pump's body is available in cast iron (cost-effective) or micro-cast stainless steel.

APPLICATION LIMITS

- Manometric suction head up to **8 m**
- Liquid temperature between **-10 °C** and **+90 °C**
- Ambient temperature between **-10 °C** and **+50 °C**
- Maximum working pressure **18 bar**

AVAILABLE UPON REQUEST

※ Mechanical seal options available
※ Shaft in stainless steel AISI 316 EN 10088-3 - 1.4401
※ Different voltage requirements 60 Hz frequency

PATENTS - TRADE MARKS - MODELS

- Registered community model
  No. 002714469 for PQ 3000-MF

CURVES AND PERFORMANCE DATA – HS=0 m 50 Hz

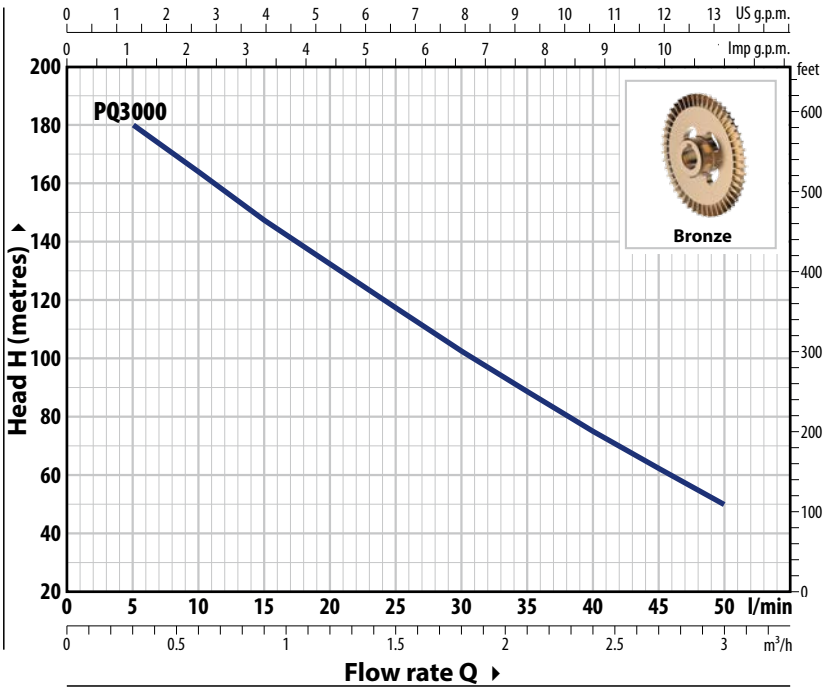

ABSORPTION

TYPE	VOLTAGE	
Three-phase	**230 V - Δ**	**400 V - ⅄**
PQ 3000	12.9 A	7.5 A
PQ 3000-MF	12.9 A	7.5 A

TYPE	POWER (P2)			Q	m³/h	0.3	0.6	0.9	1.2	1.5	1.8	2.1	2.4	2.7	3
Three-phase	**kW**	**HP**	**3~**		l/min	**5**	**10**	**15**	**20**	**25**	**30**	**35**	**40**	**45**	**50**
PQ 3000	2.2	3	**IE3**	**H**	metres	180	164	148	132	117	103	89	75.5	62.5	50
PQ 3000-MF	2.2	3				180	164	148	132	117	103	89	75.5	62.5	50

Q = Flow rate **H** = Total manometric head **HS** = Suction height

Performance curves comply with EN ISO 9906 Grade 3B tolerance limits.

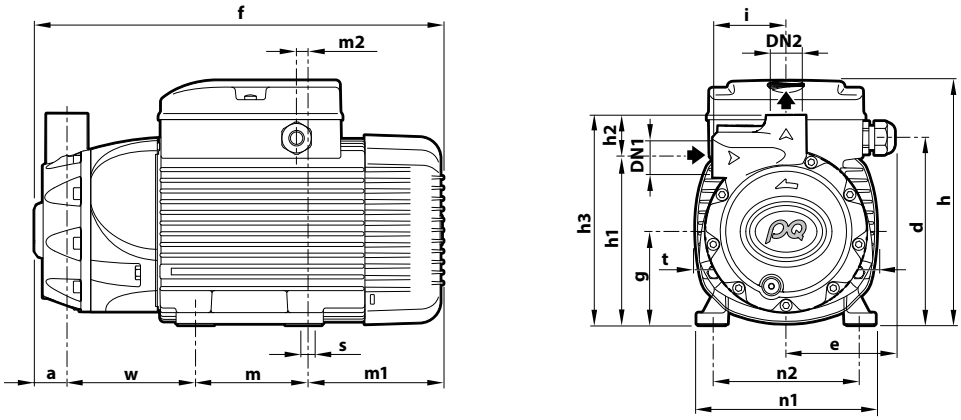

TYPE	PORTS		DIMENSIONS mm																		kg	PALLET CAPACITY
Three-phase	**DN1**	**DN2**	a	d	e	f	g	h	h1	h2	h3	i	m	m1	m2	n1	n2	t	w	s	3~	
PQ 3000	¾"	¾"	37	157.5	92	356	80	211	142	36	178	62	100	114	11	151	125	155	105	9	19.9	72
PQ 3000-MF			28			347															19.1	72

CONSTRUCTION FEATURES

1	**Pump body**	※ PQ 3000: **cast iron** with anti-blocking treatment with ISO 228/1 threaded ports ※ PQ 3000-MF: **stainless steel AISI 316** with ISO 228/1 threaded ports
2	**Cover seal**	Stainless steel **AISI 316**
3	**Motor bracket**	Aluminum
4	**Impeller**	**Bronze**, radial peripheral vane type
5	**Mechanical seal**	Type: **FN-18 NU** Materials: Graphite/ Ceramic/ NBR
6	**Motor shaft**	Stainless steel **AISI 431**
7	**Electric motor**	Three-phase 230/400 V - 50 Hz ※ The pumps are equipped with motors (IEC 60034-30-1) in class **IE3** – Continuous running duty **S1** – Insulation: class F – Protection rating: IP X5

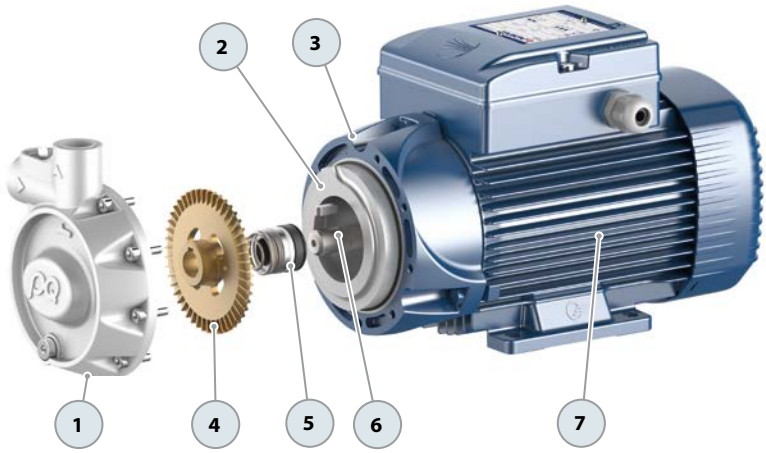

CP-ST Stainless steel centrifugal pumps

Clean water
Domestic use
Agricultural use
Industrial use

※ **Centrifugal pumps made entirely of Stainless Steel**

CP-ST4

※ Pump body: **AISI 304 stainless steel**
※ Rotor: **AISI 304 stainless steel**
※ Shaft: **AISI 431 stainless steel**

CP-ST6

※ Pump body: **AISI 316L stainless steel**
※ Rotor: **AISI 316L stainless steel**
※ Shaft: **AISI 316L stainless steel**

PERFORMANCE RANGE

- Flow rate up to **270 l/min** (16.2 m³/h)
- Head up to **45 m**

INSTALLATION AND USE

Designed to transfer clean water free from abrasive particles and liquids that will not damage the pump's components.

Thanks to their construction features, these centrifugal pumps are suited for domestic, agricultural, and industrial applications.

All components in contact with the pumped liquid are made of AISI 304 or AISI 316L stainless steel, ensuring total hygiene and maximum corrosion resistance.

ELECTRIC MOTOR

Equipped with cutting-edge electric motors, the three-phase pumps are designed to work with inverters, offering stable and noiseless performance.
They feature efficiency class **IE3** for three-phase motors and **IE2** for single-phase motors, bolstered by class F insulation and IPX4 protection.

APPLICATION LIMITS

- Manometric suction head up to **7 m**
- Liquid temperature between **-10 °C** and **+90 °C**
- Ambient temperature up to **+40 °C**
- Maximum working pressure:
  - **6 bar** for CP 100-130-132-150-158 ST4
    CP 100-130-132-150-158 ST6
  - **8 bar** for CP 170-170M ST4
    CP 170-170M ST6
    CP 180-190-200 ST4
    CP 180-190-200 ST6

AVAILABLE UPON REQUEST

※ Mechanical seal options available
※ Protection rating IP X5 for CP 170-170M-180-190-200 ST
※ Different voltage requirements 60 Hz frequency
※ Certified pumps WRAS APPROVED PRODUCT

CURVES AND PERFORMANCE DATA – HS=0 m

50 Hz

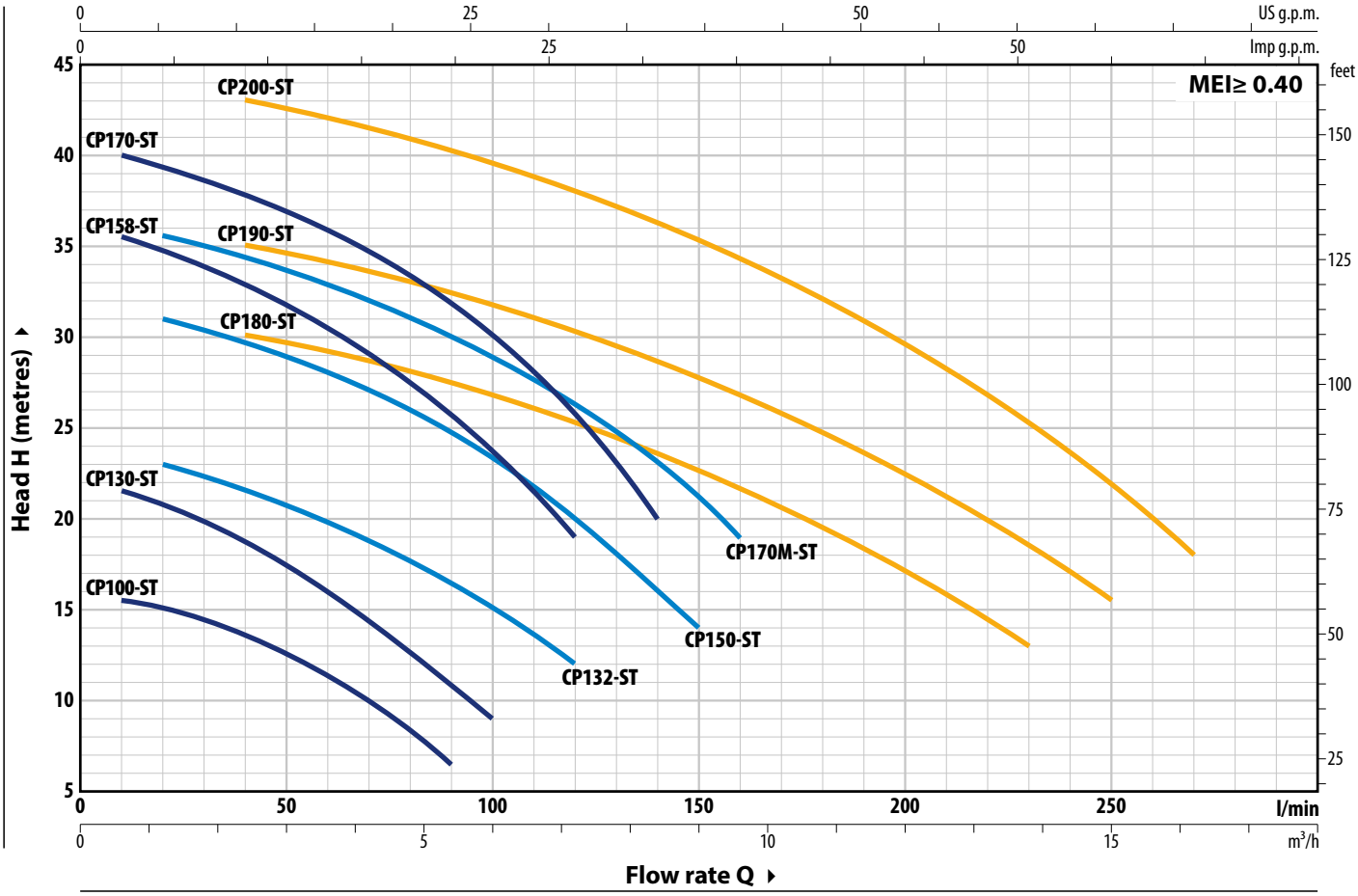

TYPE		POWER (P2)				Q m³/h	0	0.6	1.2	2.4	3.6	5.4	6.0	7.2	8.4	9.0	9.6	12	13.8	15	16.2
Single-phase	**Three-phase**	**kW**	**HP**	**1~**	**3~**	**Q l/min**	**0**	**10**	**20**	**40**	**60**	**90**	**100**	**120**	**140**	**150**	**160**	**200**	**230**	**250**	**270**
CPm 100-ST4 **CPm 100-ST6**	**CP 100-ST4** **CP 100-ST6**	0.25	0.33	IE2	IE3	H metres	16	15.5	15	13.5	11.2	6.5									
CPm 130-ST4 **CPm 130-ST6**	**CP 130-ST4** **CP 130-ST6**	0.37	0.50				22.5	21.5	20.8	18.8	16	10.8	9								
CPm 132-ST4 **CPm 132-ST6**	**CP 132-ST4** **CP 132-ST6**	0.55	0.75				24	–	23	21.5	19.8	16.5	15	12							
CPm 150-ST4 **CPm 150-ST6**	**CP 150-ST4** **CP 150-ST6**	0.75	1				32	–	31	29.8	28	24.8	23.2	20	16	14					
CPm 158-ST4 **CPm 158-ST6**	**CP 158-ST4** **CP 158-ST6**	0.75	1				36.5	35.5	34.5	33	31	26.2	24	19							
CPm 170-ST4 **CPm 170-ST6**	**CP 170-ST4** **CP 170-ST6**	1.1	1.5				41	40	39.2	37.8	36	32	30	25.8	20						
CPm 170M-ST4 **CPm 170M-ST6**	**CP 170M-ST4** **CP 170M-ST6**	1.1	1.5				36.5	–	35.5	34.3	33	30	29	26.4	23	21	19				
CPm 180-ST4 **CPm 180-ST6**	**CP 180-ST4** **CP 180-ST6**	1.1	1.5				31.5	–	–	30	29.2	27.5	26.8	25.2	23.5	22.5	21.5	17	13		
CPm 190-ST4 **CPm 190-ST6**	**CP 190-ST4** **CP 190-ST6**	1.5	2				37	–	–	35	34	32.2	31.5	30.2	28.7	27.8	27	22.7	18.5	15.5	
CPm 200-ST4 **CPm 200-ST6**	**CP 200-ST4** **CP 200-ST6**	2.2	3				45	–	–	43	42	40.2	39.5	38	36.5	35.5	34.5	29.8	25.5	22	18

Q = Flow rate **H** = Total manometric head **HS** = Suction height

Performance curves comply with EN ISO 9906 Grade 3B tolerance limits.

PERFORMANCE CURVES - HS=0 m

50 Hz

CP 100-ST CP130–ST

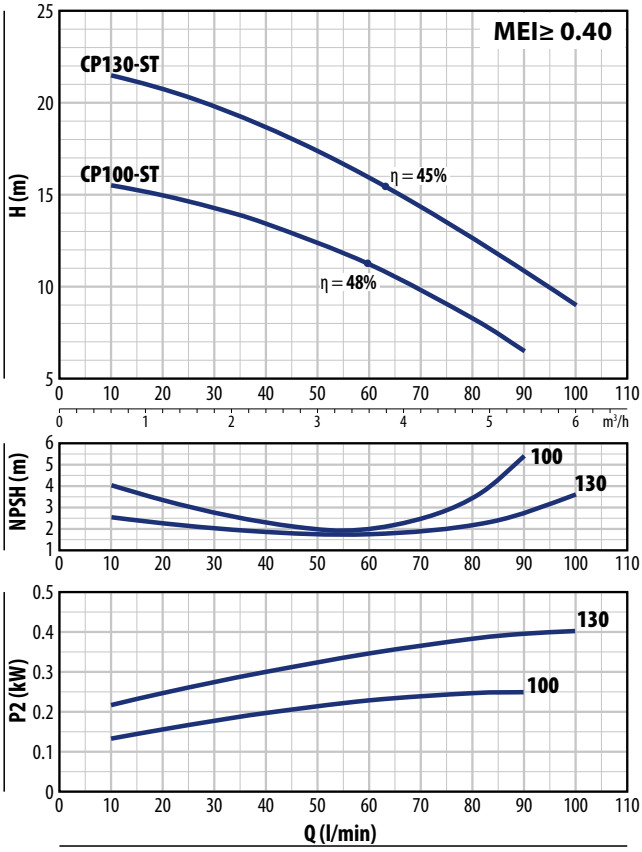

CP 132-ST

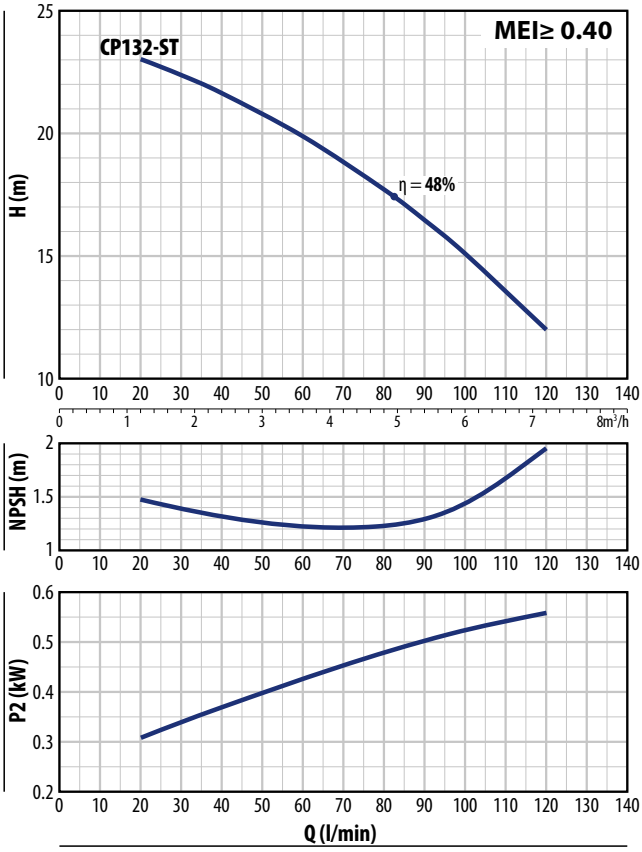

CP 150-ST

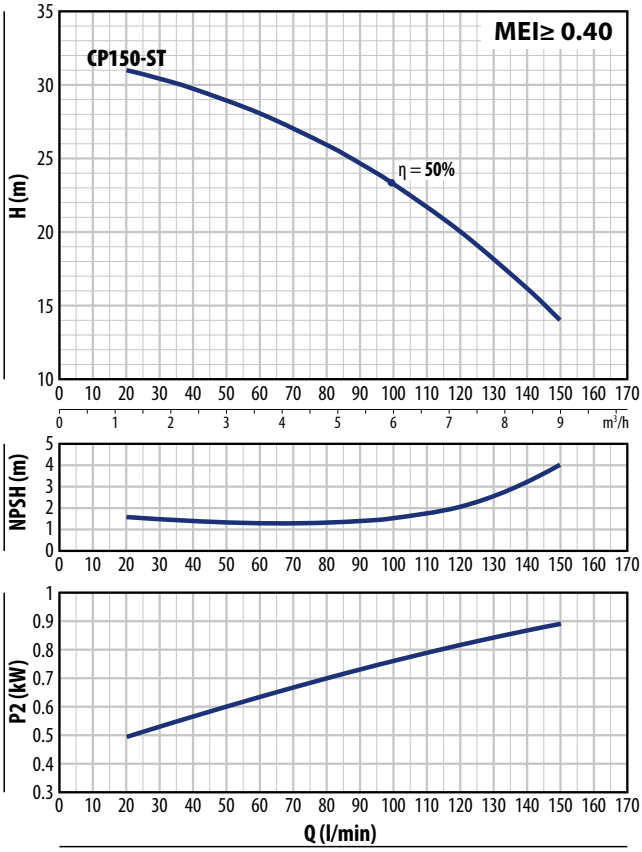

CP 158-ST

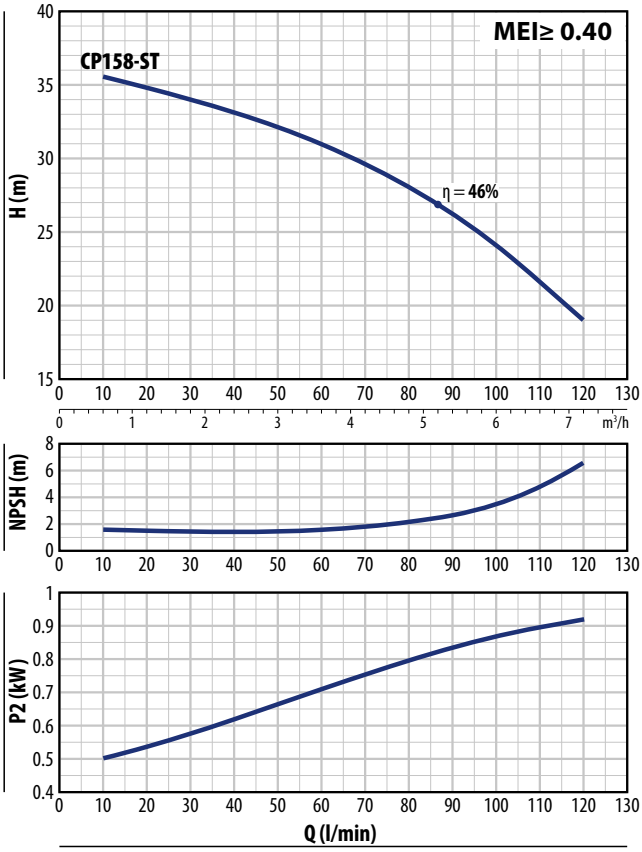

PERFORMANCE CURVES - HS=0 m

50 Hz

CP 170-ST

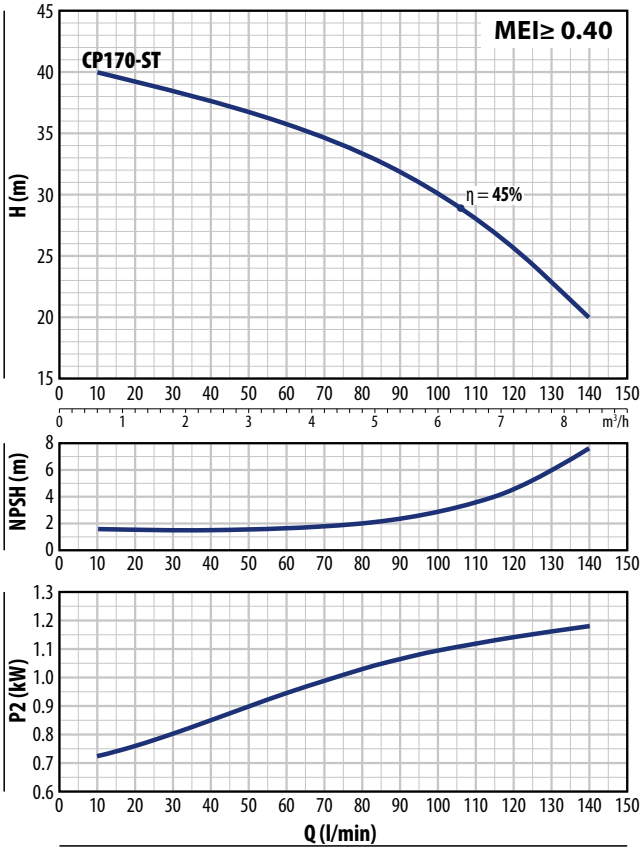

CP 170M-ST

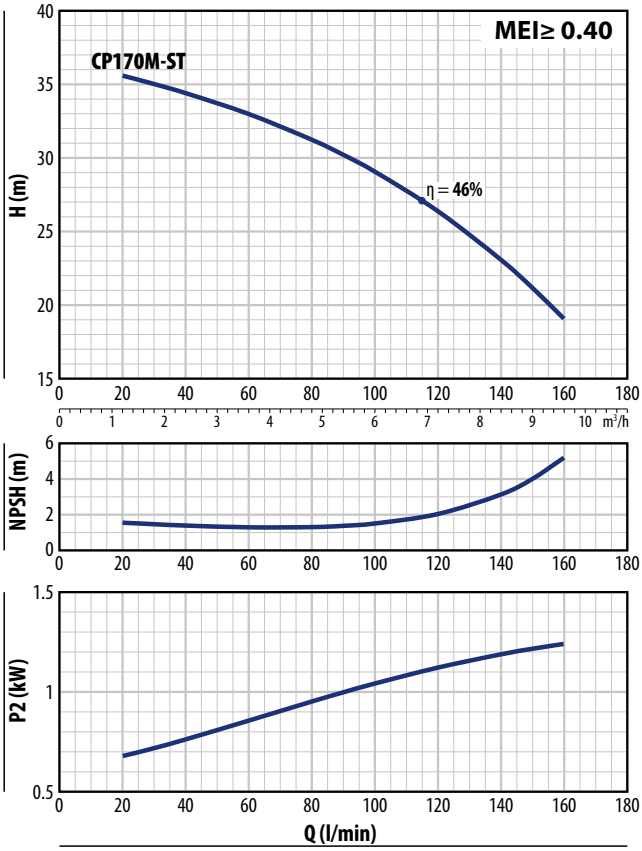

CP 180-ST CP 190-ST CP 200-ST

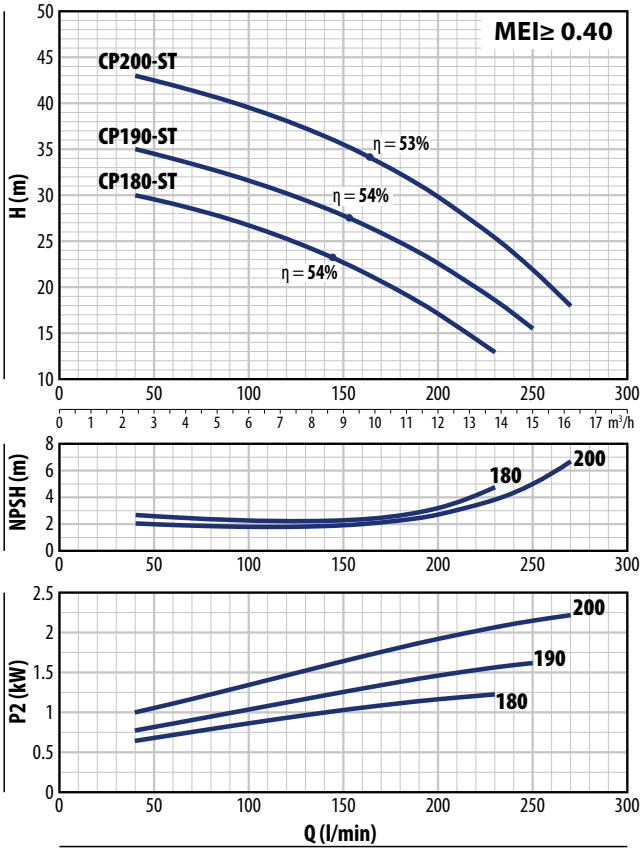

ABSORPTION

TYPE	VOLTAGE
Single-phase	**230 V**
CPm 100-ST4	2.0 A
CPm 130-ST4	3.0 A
CPm 132-ST4	3.7 A
CPm 150-ST4	6.0 A
CPm 158-ST4	6.0 A
CPm 170-ST4	7.8 A
CPm 170M-ST4	7.8 A
CPm 180-ST4	8.5 A
CPm 190-ST4	10.5 A
CPm 200-ST4	12.8 A

TYPE	VOLTAGE	
Three-phase	**230 V - Δ**	**400 V - ⅄**
CP 100-ST4	1.7 A	1.0 A
CP 130-ST4	1.9 A	1.1 A
CP 132-ST4	2.2 A	1.3 A
CP 150-ST4	4.2 A	2.4 A
CP 158-ST4	4.2 A	2.4 A
CP 170-ST4	5.7 A	3.3 A
CP 170M-ST4	5.7 A	3.3 A
CP 180-ST4	5.7 A	3.3 A
CP 190-ST4	6.6 A	3.8 A
CP 200-ST4	8.8 A	5.1 A

DIMENSIONS AND WEIGHT

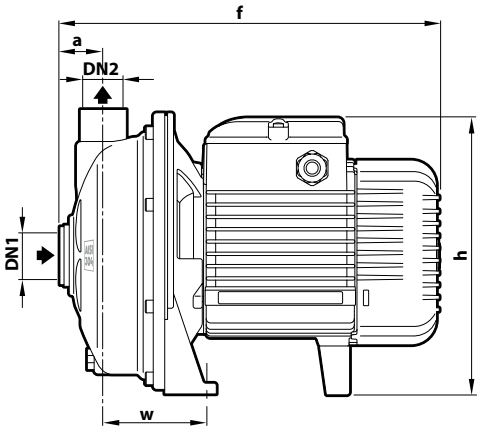

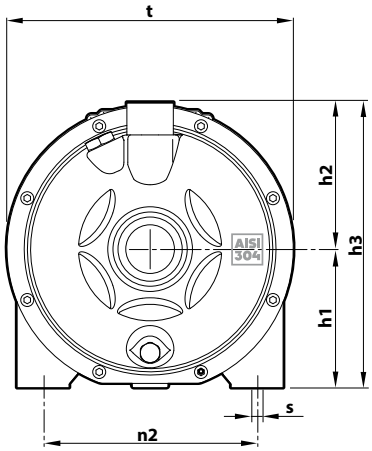

TYPE		PORTS		DIMENSIONS mm										kg	
Single-phase	**Three-phase**	**DN1**	**DN2**	a	f	h	h1	h2	h3	n2	t	w	s	1~	3~
CPm 100-ST4	**CP 100-ST4**	**1¼"**	**1"**	31.5	266	181	92	93.5	185.5	120	181	68.5	9	5.8	5.8
CPm 130-ST4	**CP 130-ST4**													6.7	6.7
CPm 132-ST4	**CP 132-ST4**													7.4	7.3
CPm 150-ST4	**CP 150-ST4**			34	296	219 *	107	112	219	165	221	80.5	9.5	11.1	11.1
CPm 158-ST4	**CP 158-ST4**													11.1	11.1
CPm 170-ST4	**CP 170-ST4**			33.5	370	251	120	117.5	237.5	180	244	86.5	11	16.0	14.7
CPm 170M-ST4	**CP 170M-ST4**													15.9	14.6
CPm 180-ST4	**CP 180-ST4**			33.5	370	250	120	117.5	237.5	180	244	86.5	11	15.8	15.8
CPm 190-ST4	**CP 190-ST4**													17.1	17.1
CPm 200-ST4	**CP 200-ST4**				390									19.6	19.6

(*) h=233 mm for single-phase 110 V versions

PALLET CAPACITY

TYPE		NO. OF PUMPS
Single-phase	**Three-phase**	
CPm 100-ST4	**CP 100-ST4**	96
CPm 130-ST4	**CP 130-ST4**	96
CPm 132-ST4	**CP 132-ST4**	96
CPm 150-ST4	**CP 150-ST4**	50
CPm 158-ST4	**CP 158-ST4**	50
CPm 170-ST4	**CP 170-ST4**	45
CPm 170M-ST4	**CP 170M-ST4**	45
CPm 180-ST4	**CP 180-ST4**	45
CPm 190-ST4	**CP 190-ST4**	45
CPm 200-ST4	**CP 200-ST4**	45

CONSTRUCTION FEATURES

1	**Pump body**	Stainless steel **AISI 304**
2	**Cover**	Stainless steel **AISI 304**
3	**Impeller**	Stainless steel **AISI 304**
4	**Mechanical seal**	

Pump	Seal	Shaft	Materials
CP 100-130-131-ST4	**AR-12**	Ø 12 mm	Ceramic / Graphite / NBR / AISI 304
CP 150-158-ST4	**AR-14**	Ø 14 mm	Ceramic / Graphite / NBR / AISI 304
CP 170-170M-180-190-200-ST4	**FN-18**	Ø 18 mm	Graphite / Ceramic / NBR / AISI 316

5	**Motor shaft**	Stainless steel **AISI 431**
6	**Electric motor**	**CPm-ST4**: single-phase 230 V - 50 Hz with winding integrated thermal motor protection. **CP-ST4**: three-phase 230/400 V - 50 Hz ※ Pumps are equipped with high-efficiency motors (IEC 60034-30-1) class **IE2** for single-phase models class **IE3** for three-phase models Continuous running duty **S1**

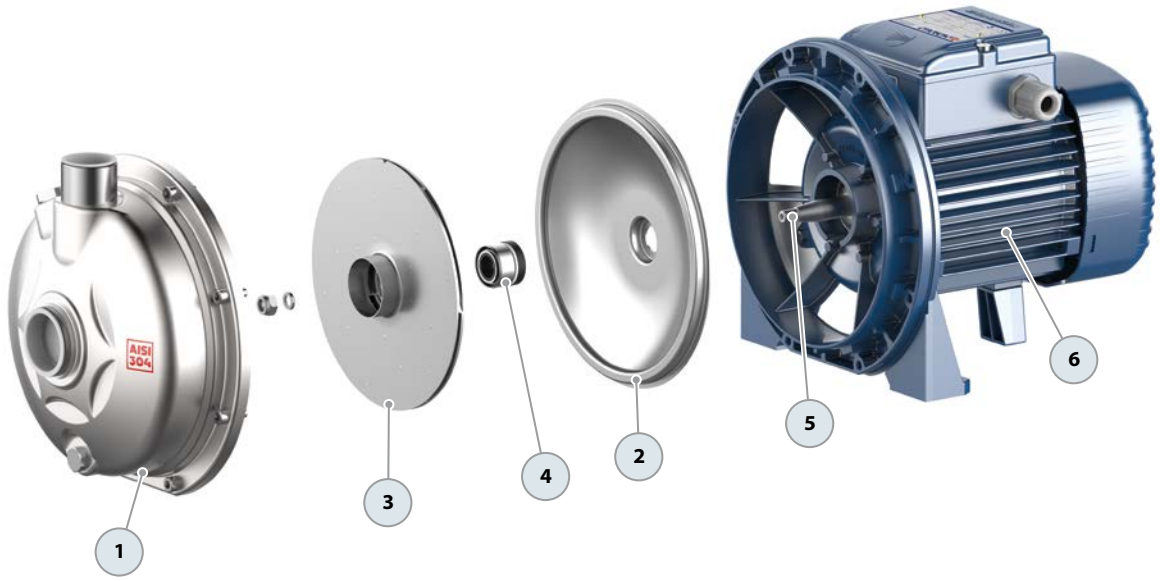

ABSORPTION

TYPE	VOLTAGE
Single-phase	**230 V**
CPm 100-ST6	2.0 A
CPm 130-ST6	3.0 A
CPm 132-ST6	3.7 A
CPm 150-ST6	6.0 A
CPm 158-ST6	6.0 A
CPm 170-ST6	7.8 A
CPm 170M-ST6	7.8 A
CPm 180-ST6	8.5 A
CPm 190-ST6	10.5 A
CPm 200-ST6	12.8 A

TYPE	VOLTAGE	
Three-phase	**230 V - Δ**	**400 V - ⅄**
CP 100-ST6	1.7 A	1.0 A
CP 130-ST6	1.9 A	1.1 A
CP 132-ST6	2.2 A	1.3 A
CP 150-ST6	4.2 A	2.4 A
CP 158-ST6	4.2 A	2.4 A
CP 170-ST6	5.7 A	3.3 A
CP 170M-ST6	5.7 A	3.3 A
CP 180-ST6	5.7 A	3.3 A
CP 190-ST6	6.6 A	3.8 A
CP 200-ST6	8.8 A	5.1 A

DIMENSIONS AND WEIGHT

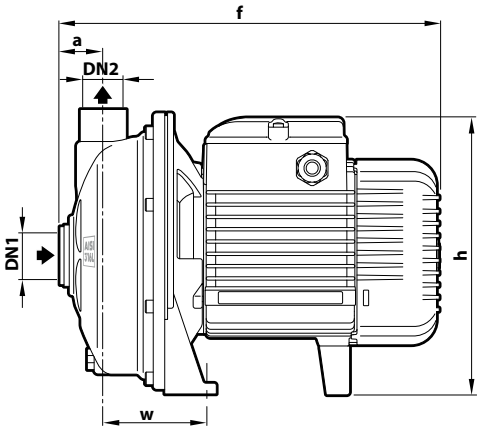

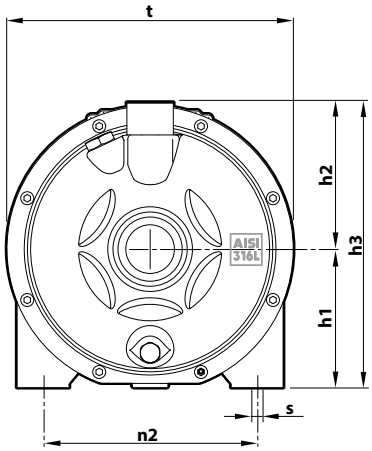

TYPE		PORTS		DIMENSIONS mm										kg	
Single-phase	**Three-phase**	**DN1**	**DN2**	a	f	h	h1	h2	h3	n2	t	w	s	1~	3~
CPm 100-ST6	**CP 100-ST6**	**1¼"**	**1"**	31.5	266	181	92	93.5	185.5	120	181	68.5	9	5.8	5.8
CPm 130-ST6	**CP 130-ST6**													6.7	6.7
CPm 132-ST6	**CP 132-ST6**													7.4	7.3
CPm 150-ST6	**CP 150-ST6**			34	296	219 *	107	112	219	165	221	80.5	9.5	11.1	11.1
CPm 158-ST6	**CP 158-ST6**													11.1	11.1
CPm 170-ST6	**CP 170-ST6**			33.5	370	251	120	117.5	237.5	180	244	86.5	11	16.0	14.7
CPm 170M-ST6	**CP 170M-ST6**													15.9	14.6
CPm 180-ST6	**CP 180-ST6**			33.5	370	250	120	117.5	237.5	180	244	86.5	11	15.8	15.8
CPm 190-ST6	**CP 190-ST6**													17.1	17.1
CPm 200-ST6	**CP 200-ST6**				390									19.6	19.6

(*) h=233 mm for single-phase 110 V versions

PALLET CAPACITY

TYPE		NO. OF PUMPS
Single-phase	**Three-phase**	
CPm 100-ST6	**CP 100-ST6**	96
CPm 130-ST6	**CP 130-ST6**	96
CPm 132-ST6	**CP 132-ST6**	96
CPm 150-ST6	**CP 150-ST6**	50
CPm 158-ST6	**CP 158-ST6**	50
CPm 170-ST6	**CP 170-ST6**	45
CPm 170M-ST6	**CP 170M-ST6**	45
CPm 180-ST6	**CP 180-ST6**	45
CPm 190-ST6	**CP 190-ST6**	45
CPm 200-ST6	**CP 200-ST6**	45

CONSTRUCTION FEATURES

1	**Pump body**	Stainless steel **AISI 316L**
2	**Cover**	Stainless steel **AISI 316L**
3	**Impeller**	Stainless steel **AISI 316L**

4 Mechanical seal

Pump	Seal	Shaft	Materials
CP 100-130-132-ST6	**AR-12ST6**	Ø 12 mm	Ceramic / Graphite / NBR / AISI 316
CP 150-158-ST6	**AR-14ST6**	Ø 14 mm	Ceramic / Graphite / NBR / AISI 316
CP 170-170M-180-190-200-ST6	**FN-18ST6**	Ø 18 mm	Graphite / Ceramic / NBR / AISI 316

5 Motor shaft Stainless steel **AISI 316L**

6 Electric motor

CPm-ST6: single-phase 230 V - 50 Hz with winding integrated thermal motor protection.
CP-ST6: three-phase 230/400 V - 50 Hz

※ Pumps are equipped with high-efficiency motors (IEC 60034-30-1)
class **IE2** for single-phase models
class **IE3** for three-phase models

Continuous running duty **S1**

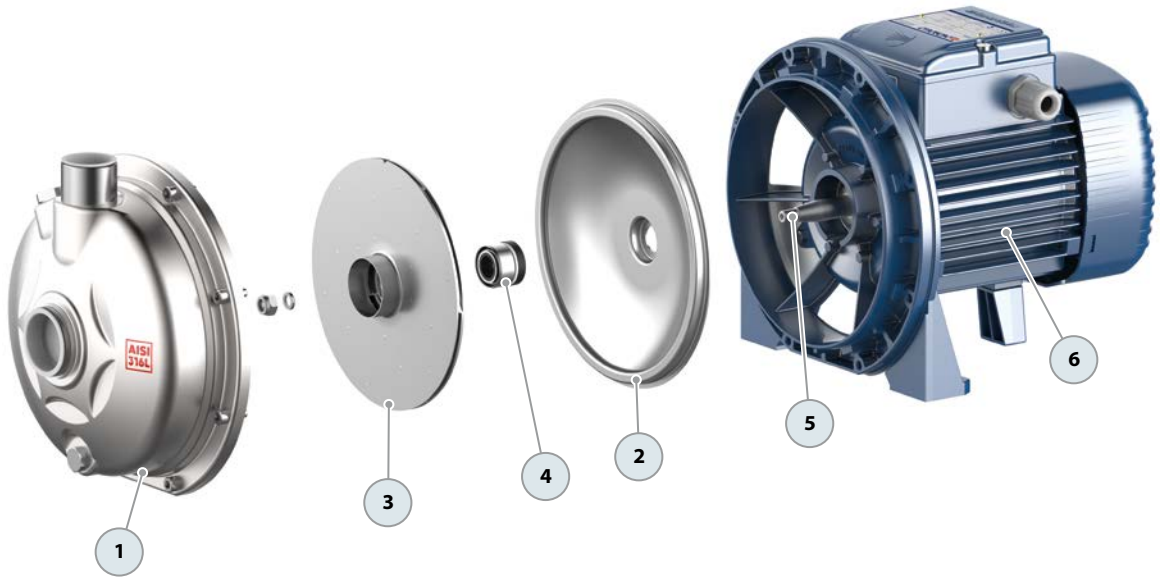

CP Centrifugal pumps

Clean water

Domestic use

Civil use

PERFORMANCE RANGE

- Flow rate up to **160 l/min** (9.6 m³/h)
- Head up to **56 m**

INSTALLATION AND USE

Designed to transfer clean water free from abrasive particles and liquids that will not damage the pump's components.

Reliable and easy to operate, these pumps have extensive application in domestic and civil settings, particularly for distributing water with small to medium-sized pressure tanks, transferring fluids, and watering orchards and gardens.

※ **The AISI 304 stainless steel impeller comes with a ten-year guarantee**

ELECTRIC MOTOR

Equipped with cutting-edge electric motors, the three-phase pumps are designed to work with inverters, offering stable and noiseless performance.
They feature efficiency class **IE3** for three-phase motors and **IE2** for single-phase motors, bolstered by class F insulation and IPX4 protection.

APPLICATION LIMITS

- Manometric suction head up to **7 m**
- Liquid temperature between **-10 °C** and **+90 °C**
- Ambient temperature up to **+40 °C**
- Maximum working pressure:
  - **6 bar** for CP 100-130-132-150-158
  - **10 bar** for CP 170-190-200

AVAILABLE UPON REQUEST

※ Mechanical seal options available
※ Protection rating IP X5 for CP 170, CP 170M
※ Different voltage requirements 60 Hz frequency

PATENTS - TRADE MARKS - MODELS

- CPm158 registered trademark no. 0001516350
- Registered community model no. 002098434

CURVES AND PERFORMANCE DATA – HS=0 m

50 Hz

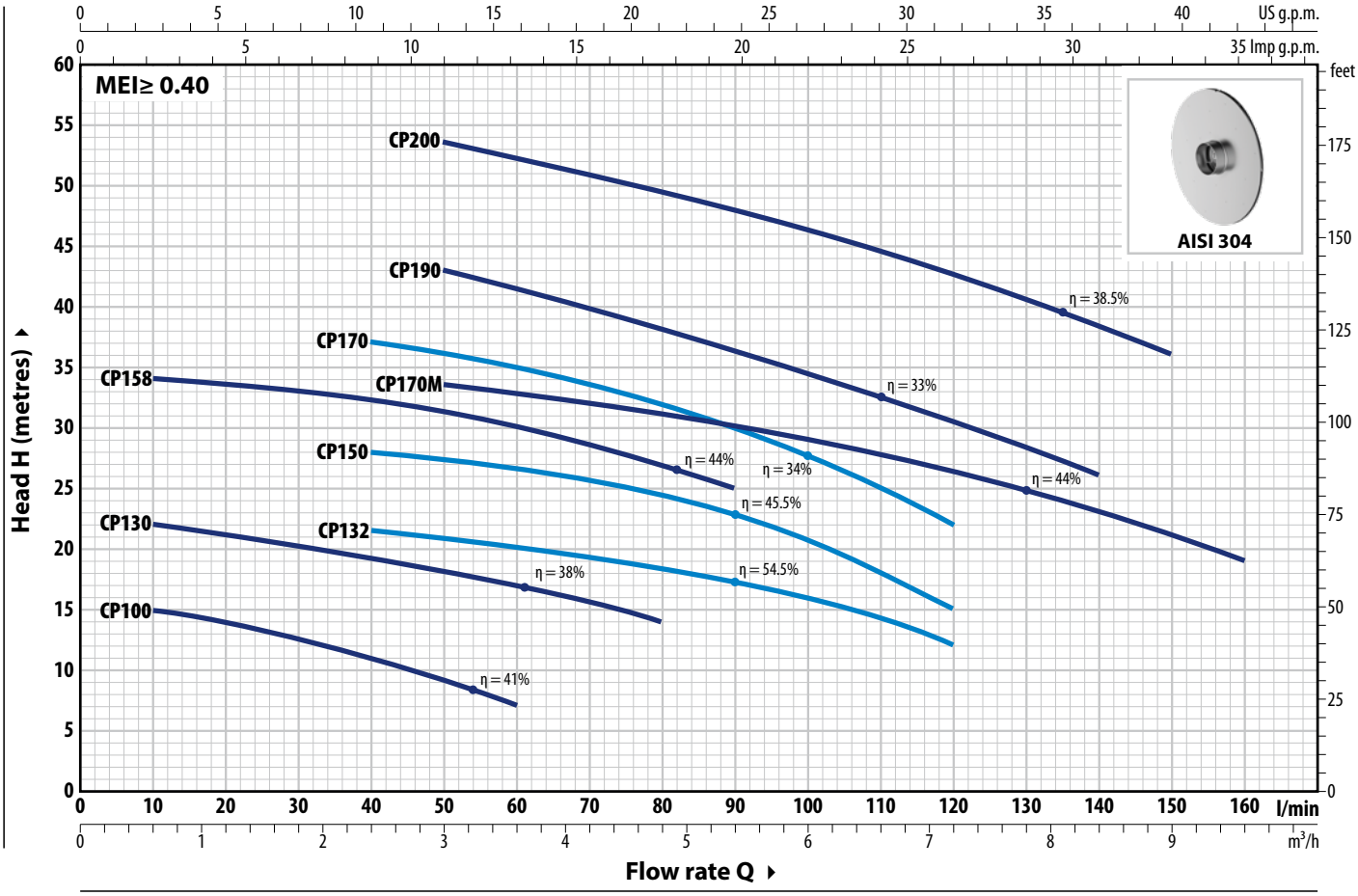

TYPE Single-ph.	TYPE Three-ph.	POWER (P2) kW	POWER (P2) HP	1~	3~	Q	m³/h	0	0.6	1.2	1.8	2.4	3.0	3.6	4.2	4.8	5.4	6.0	6.6	7.2	7.8	8.4	9.0	9.6
							l/min	**0**	**10**	**20**	**30**	**40**	**50**	**60**	**70**	**80**	**90**	**100**	**110**	**120**	**130**	**140**	**150**	**160**
CPm 100	**CP 100**	0.25	0.33					16	15	14	12.5	11	9	7										
CPm 130	**CP 130**	0.37	0.50					23	22	21	20	19	18	17	15.5	14								
CPm 132	**CP 132**	0.55	0.75					23	–	22.5	22	21.5	21	20.5	19.5	18.5	17.5	16	14	12				
CPm 150	**CP 150**	0.75	1					29.5	–	29	28.5	28	27.5	26.5	26	24.5	23	21	18	15				
CPm 158	**CP 158**	0.75	1	**IE2**	**IE3**	**H** metres		36	34	33.5	33	32.5	31.5	30	28.5	27	25							
CPm 170	**CP 170**	1.1	1.5					41	–	–	38	37	36	35	33.5	32	30	27.5	25	22				
CPm 170M	**CP 170M**	1.1	1.5					36	–	–	35	34.5	33.5	33	32	31	30	29	28	26.5	25	23	21	19
CPm 190	**CP 190**	1.5	2					48	–	–	46	44.5	43	41.5	40	38	36	34.5	32.5	30.5	28	26		
CPm 200	**CP 200**	2.2	3					56	–	–	55	54.5	53.5	52	51	49.5	48	46	44.5	42.5	40.5	38.5	36	

Q = Flow rate **H** = Total manometric head **HS** = Suction height

Performance curves comply with EN ISO 9906 Grade 3B tolerance limits.

ABSORPTION

TYPE	VOLTAGE
Single-phase	**230 V**
CPm 100	1.9 A
CPm 130	3.2 A
CPm 132	3.9 A
CPm 150	5.7 A
CPm 158	6.0 A
CPm 170 - 170M	7.8 A
CPm 190	11.0 A
CPm 200	13.0 A

TYPE	VOLTAGE	
Three-phase	**230 V - Δ**	**400 V - ⅄**
CP 100	1.6 A	0.95 A
CP 130	2.0 A	1.15 A
CP 132	2.2 A	1.3 A
CP 150	4.2 A	2.4 A
CP 158	4.3 A	2.5 A
CP 170 - 170M	5.2 A	3.0 A
CP 190	7.4 A	4.3 A
CP 200	9.3 A	5.4 A

DIMENSIONS AND WEIGHT

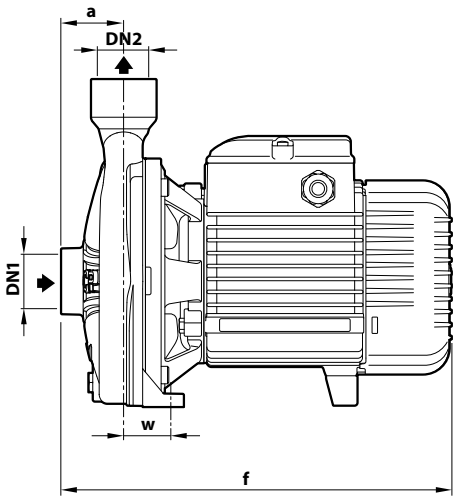

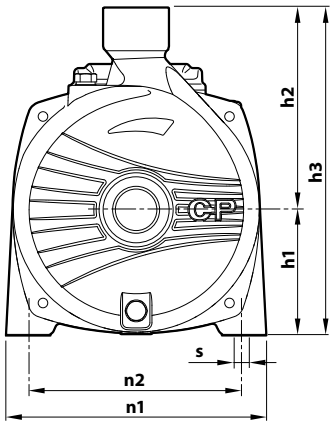

TYPE		PORTS		DIMENSIONS mm									kg	
Single-ph.	**Three-ph.**	**DN1**	**DN2**	a	f	h3	h1	h2	n1	n2	w	s	1~	3~
CPm 100	**CP 100**												7.0	7.0
CPm 130	**CP 130**				257	205	82	123	165	135	38		7.8	7.8
CPm 132	**CP 132**	**1"**	**1"**	42								11	8.5	8.5
CPm 150	**CP 150**				286	240	92	148	190	160	37		12.3	12.2
CPm 158	**CP 158**												12.4	12.3
CPm 170	**CP 170**			51	367	260	110	150	206	165	44.5		19.1	17.6
CPm 170M	**CP 170M**	**1¼"**	**1"**									11	19.3	17.9
CPm 190	**CP 190**			47.5	364	290	115	175	242	206	36.5		21.6	21.5
CPm 200	**CP 200**				384								24.6	24.6

PALLET CAPACITY

TYPE		NO. OF PUMPS
Single-ph.	**Three-ph.**	
CPm 100	**CP 100**	96
CPm 130	**CP 130**	96
CPm 132	**CP 132**	96
CPm 150	**CP 150**	70
CPm 158	**CP 158**	70
CPm 170	**CP 170**	50
CPm 170M	**CP 170M**	50
CPm 190	**CP 190**	36
CPm 200	**CP 200**	36

CONSTRUCTION FEATURES

1	**Pump body**	Cast iron with cataphoresis treatment with ISO 228/1 threaded ports
2	**Cover**	**AISI 304** stainless steel (cast iron for models CP 170-170M-190-200)
3	**Impeller**	Stainless steel **AISI 304**

4 Mechanical seal

Pump	Seal	Shaft	Materials
CP 100-130-132	**AR-12**	Ø 12 mm	Ceramic / Graphite / NBR
CP 150-158	**AR-14**	Ø 14 mm	Ceramic / Graphite / NBR
CP 170-170M-190-200	**FN-18**	Ø 18 mm	Graphite / Ceramic / NBR

5 Motor shaft Stainless steel **AISI 431**

6 Electric motor

CPm: single-phase 230 V - 50 Hz with winding integrated thermal motor protection.
CP: three-phase 230/400 V - 50 Hz

※ Pumps are equipped with high-efficiency motors (IEC 60034-30-1)
class **IE2** for single-phase models
class **IE3** for three-phase models

Continuous running duty **S1**

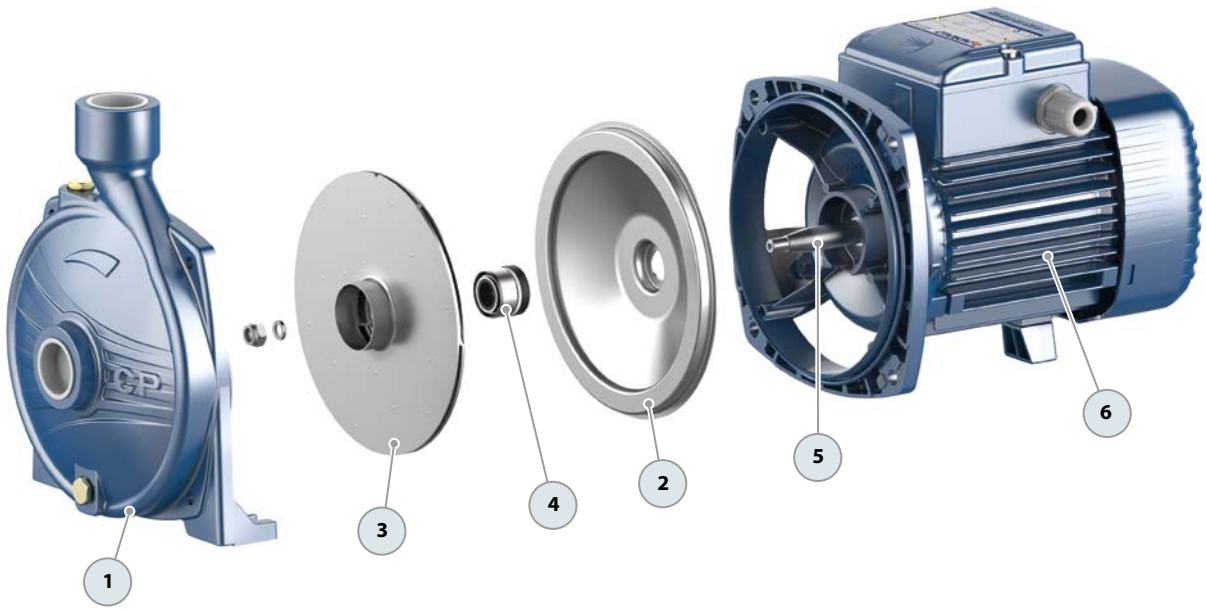

CP Centrifugal pumps

Clean water
Civil use
Agricultural use
Industrial use

PERFORMANCE RANGE

- Flow rate up to **900 l/min** (54 m³/h)
- Head up to **76 m**

INSTALLATION AND USE

Designed to transfer clean water free from abrasive particles and liquids that will not damage the pump's components.

Reliable and easy to operate, these pumps are widely used in civil, agricultural, and industrial settings for water supply, air conditioning and cooling systems, and irrigation purposes.

ELECTRIC MOTOR

Equipped with cutting-edge electric motors, the three-phase pumps are designed to work with inverters, offering stable and noiseless performance.

They feature efficiency class **IE3** for three-phase motors and **IE2** for single-phase motors, bolstered by class F insulation and IPX4 protection for models CP160 and CP210, and IPX5 protection for models CP220, CP230, and CP250.

APPLICATION LIMITS

- Manometric suction head up to **7 m**
- Liquid temperature between **-10 °C** and **+90 °C**
- Ambient temperature between **-10 °C** and **+40 °C**
- Maximum working pressure **10 bar**

AVAILABLE UPON REQUEST

※ Mechanical seal options available
※ Pump shaft in stainless steel AISI 316 - EN 10088-3 - 1.4401 for CP 220, CP 230, CP 250
※ Protection rating IP X5 for CP 160 and CP 210
※ Different voltage requirements 60 Hz frequency

PATENTS - TRADE MARKS - MODELS

- Registered community model No. 002098434 for CP 160, CP 210, CP 250
- Italian registered model no. 72753 for CP 220, CP 230

CURVES AND PERFORMANCE DATA – HS=0 m

50 Hz

CP 160

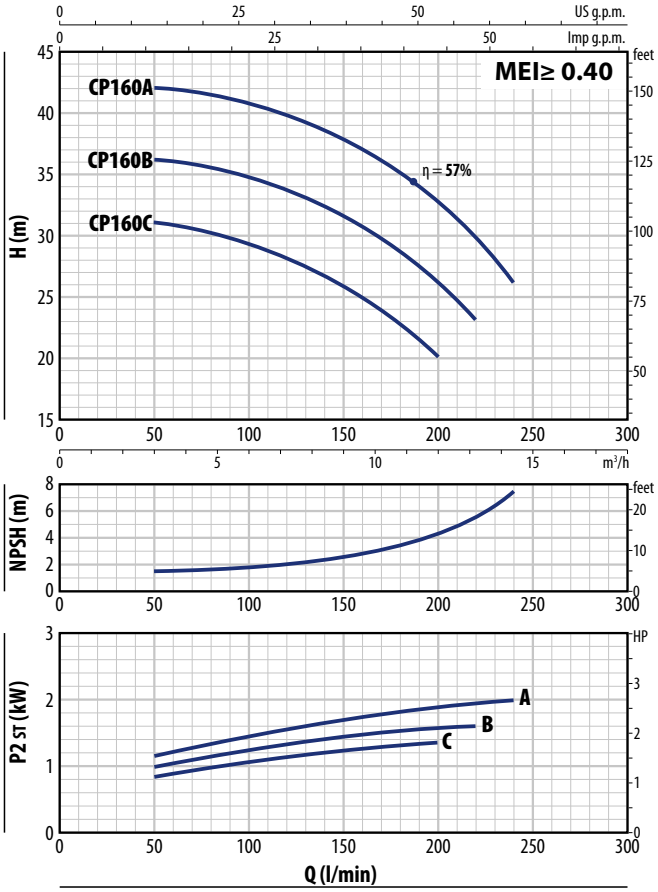

CP 210

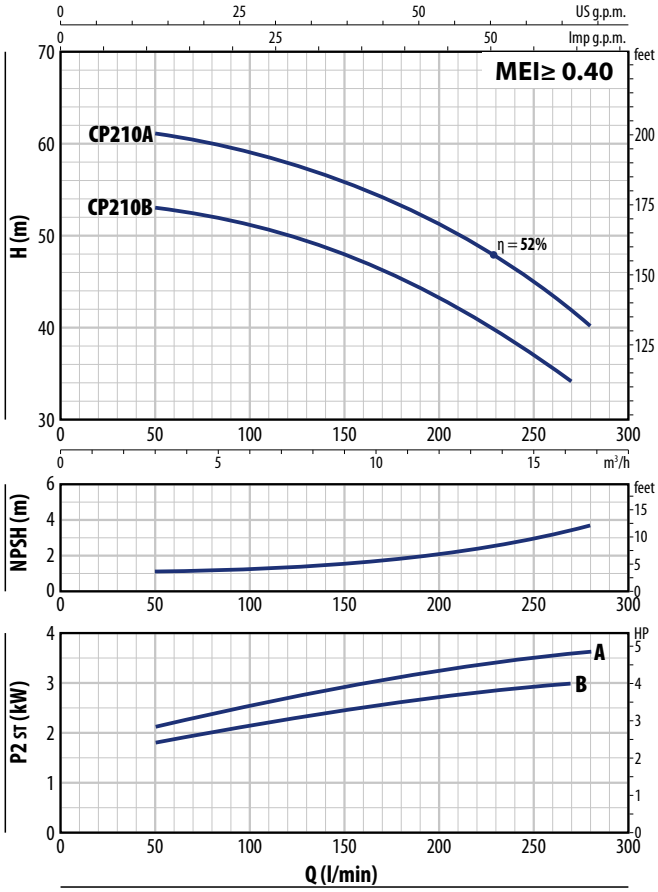

CP 160

TYPE		POWER (P2)				Q m³/h	0	3	4.5	6	7.5	9	10.5	12	13.2	14.4
Single-ph.	Three-ph.	kW	HP	1~	3~	l/min	**0**	**50**	**75**	**100**	**125**	**150**	**175**	**200**	**220**	**240**
CPm 160C	CP 160C	1.1	1.5	IE2	IE3	H metres	32	31	30.5	29.5	28	26	23	20		
CPm 160B	CP 160B	1.5	2				37	36	35.5	34.5	33.5	31.5	29	26.5	23	
CPm 160A	CP 160A	2.2	3				43	42	41.5	40.5	39.5	38	35.5	33	30	26

CP 210

TYPE	POWER (P2)			Q m³/h	0	3	4.5	6	7.5	9	10.5	12	13.2	14.4	15	16.2	16.8
Three-ph.	kW	HP	3~	l/min	**0**	**50**	**75**	**100**	**125**	**150**	**175**	**200**	**220**	**240**	**250**	**270**	**280**
CP 210B	3	4	IE3	H metres	54	53	52	51	49.5	48	45.5	43	40	38.5	37	34	
CP 210A	4	5.5			61	61	60	59	57.5	56	53.5	51	49	46.5	45	42	40

Q = Flow rate **H** = Total manometric head **HS** = Suction height

Performance curves comply with EN ISO 9906 Grade 3B tolerance limits.

CURVES AND PERFORMANCE DATA – HS=0 m

50 Hz

CP 220

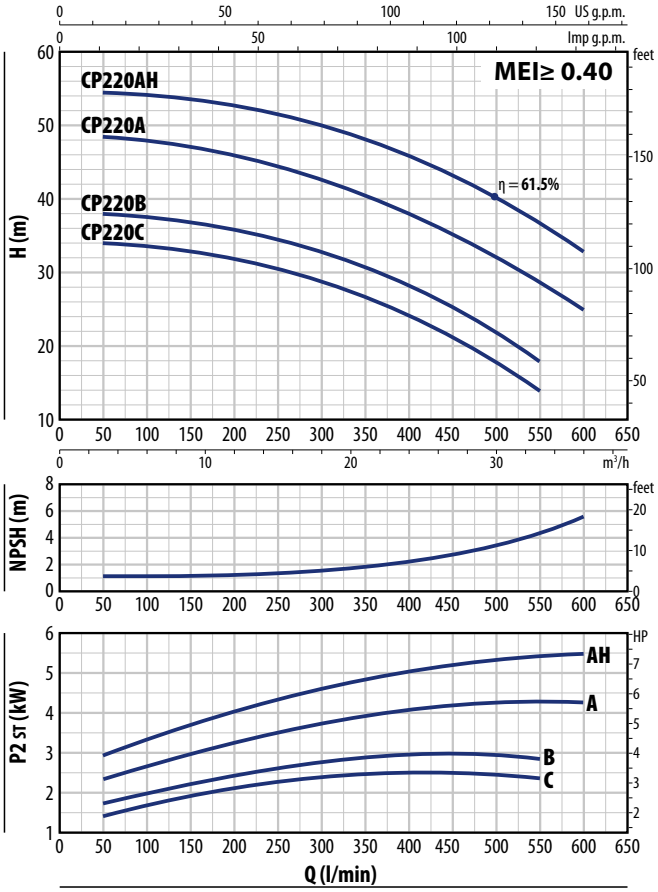

CP 230

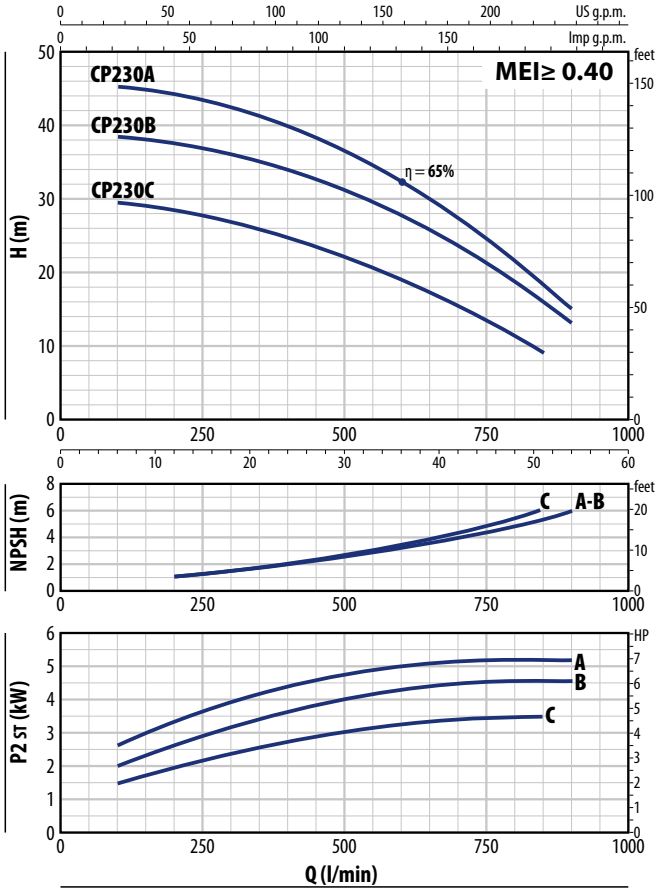

CP 220

TYPE		POWER (P2)				Q m³/h	0	3	6	12	18	24	30	33	36
Single-phase	Three-phase	kW	HP	1~	3~	Q l/min	**0**	**50**	**100**	**200**	**300**	**400**	**500**	**550**	**600**
CPm 220C	CP 220C	2.2	3	IE2	IE3	H metres	34	34	33.5	32	29	24.3	18	14	
–	CP 220B	3	4				38	38	37.5	36	33	28.5	22	18	
–	CP 220A	4	5.5				49	48.5	48	46	42.5	38	32	29	25
–	CP 220AH	5.5	7.5				54.5	54.5	54	52.5	50	46	40.5	37	33

CP 230

TYPE	POWER (P2)			Q m³/h	0	6	12	18	24	30	36	42	48	51	54
Three-phase	kW	HP	3~	Q l/min	0	**100**	**200**	**300**	**400**	**500**	**600**	**700**	**800**	**850**	**900**
CP 230C	3	4	IE3	H metres	30	29.5	28.5	27	25	22	19.5	15.5	11.5	9	
CP 230B	4	5.5			39	38.5	38	36	34	31	28	24	18.5	15	13
CP 230A	5.5	7.5			46	45.5	44.5	42	40	37	32.5	27.5	21.5	18	15

Q = Flow rate **H** = Total manometric head **HS** = Suction height

Performance curves comply with EN ISO 9906 Grade 3B tolerance limits.

CURVES AND PERFORMANCE DATA – HS=0 m

50 Hz

CP 250

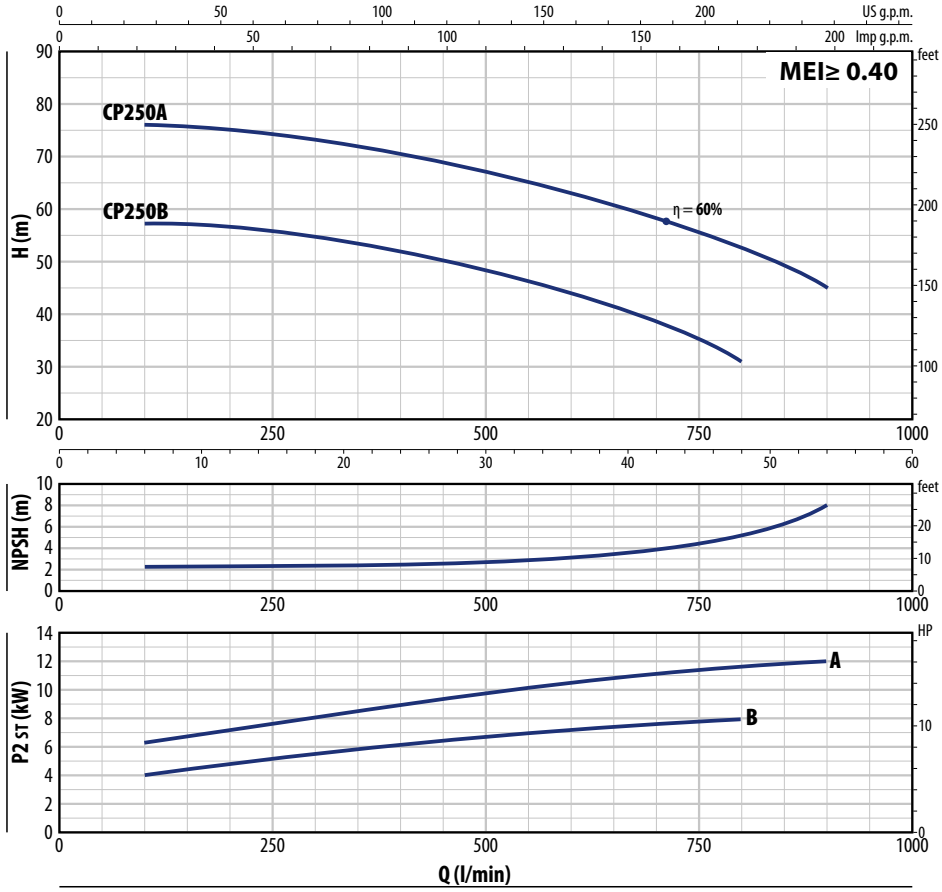

CP 250

TYPE Three-phase	POWER (P2) kW	HP	3~	Q m³/h / l/min	0 / 0	6 / 100	12 / 200	18 / 300	24 / 400	30 / 500	36 / 600	42 / 700	48 / 800	54 / 900
CP 250B	7.5	10	IE3	H metres	57	57	56.5	54.5	52	48.5	44	38	31	
CP 250A	11	15			76	76	75	73.5	71	67.5	63	58	52	45

Q = Flow rate **H** = Total manometric head **HS** = Suction height

Performance curves comply with EN ISO 9906 Grade 3B tolerance limits.

ABSORPTION

TYPE Single-phase	VOLTAGE 230 V
CPm 160C	8.5 A
CPm 160B	10.3 A
CPm 160A	13.0 A
CPm 220C	14.2 A

TYPE Three-ph.	VOLTAGE 230 V - Δ	400 V - ⅄	400 V - Δ	690 V - ⅄
CP 160C	5.7 A	3.3 A	–	–
CP 160B	6.9 A	4.0 A	–	–
CP 160A	8.8 A	5.1 A	–	–
CP 210B	12.6 A	7.3 A	–	–
CP 210A	15.1 A	8.7 A	–	–
CP 220C	9.0 A	5.2 A	–	–
CP 220B	12.6 A	7.3 A	–	–
CP 220A	17.0 A	9.8 A	–	–
CP 220AH	–	–	11.5 A	6.6 A
CP 230C	13.1 A	7.6 A	–	–
CP 230B	16.8 A	9.7 A	–	–
CP 230A	–	–	11.5 A	6.6 A
CP 250B	–	–	15.0 A	8.7 A
CP 250A	–	–	22.5 A	13.0 A

DIMENSIONS AND WEIGHT

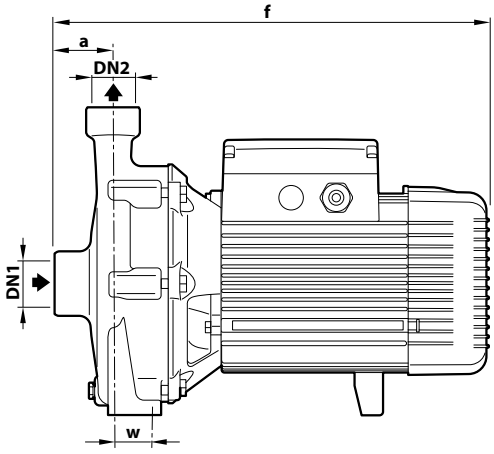

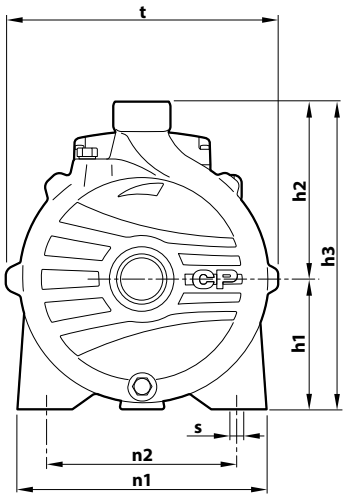

TYPE		PORTS		DIMENSIONS mm										kg	
Single-ph.	**Three-ph.**	**DN1**	**DN2**	a	f	h1	h2	h3	t	n1	n2	w	s	1~	3~
CPm 160C	**CP 160C**	**1½"**	**1"**	54	370	110	150	260	–	206	165	44.5	11	18.7	18.8
CPm 160B	**CP 160B**													20.0	20.0
CPm 160A	**CP 160A**				390									22.7	22.9
–	**CP 210B**			60	454	132	180	312		274	205	35		–	33.8
–	**CP 210A**													–	37.2
CPm 220C	**CP 220C**	**2"**	**2"**	70	428	132	183	315	243	230	170	40	14	29.5	32.3
–	**CP 220B**			70	468	136	192	328	273	250	190	40		–	34.2
–	**CP 220A**													–	41.0
–	**CP 220AH**													–	47.0
–	**CP 230C**													–	37.2
–	**CP 230B**													–	41.0
–	**CP 230A**													–	46.0
–	**CP 250B**			65	519	160	232	392	317	294	230	45		–	67.0
–	**CP 250A**				570									–	98.0

PALLET CAPACITY

TYPE		NO. OF PUMPS
Single-ph.	**Three-ph.**	
CPm 160C	**CP 160C**	50
CPm 160B	**CP 160B**	50
CPm 160A	**CP 160A**	35
–	**CP 210B**	18
–	**CP 210A**	18

TYPE		NO. OF PUMPS
Single-ph.	**Three-ph.**	
CPm 220C	**CP 220C**	18
–	**CP 220B**	18
–	**CP 220A**	18
–	**CP 220AH**	18
–	**CP 230C**	18
–	**CP 230B**	18
–	**CP 230A**	18
–	**CP 250B**	6
–	**CP 250A**	6

CONSTRUCTION FEATURES

1	**Pump body**	Cast iron with ISO 228/1 threaded ports
2	**Cover**	Cast iron
3	**Impeller**	Stainless steel for CP160 Brass for CP 210, CP 220, CP 230 Cast iron for CP 250

4 Mechanical seal

Pump	Seal	Shaft	Materials
CP 160C-B-A	**FN-18**	Ø 18 mm	Graphite / Ceramic / NBR
CP 220C	**FN-20**	Ø 20 mm	Graphite / Ceramic / NBR
CP 210B-A CP 220B-A-AH CP 230C-B-A CP 250B	**FN-24**	Ø 24 mm	Graphite / Ceramic / NBR
CP 250A	**FN-32 NU**	Ø 32 mm	Graphite / Ceramic / NBR

5	**Motor shaft**	Stainless steel **AISI 431**
6	**Electric motor**	**CPm**: single-phase 230 V - 50 Hz. **CP**: three-phase 230/400 V - 50 Hz up to 4 kW. 400/690 V - 50 Hz from 5.5 to 11 kW. ※ Pumps are equipped with high-efficiency motors (IEC 60034-30-1) class **IE2** for single-phase models class **IE3** for three-phase models Continuous running duty **S1**

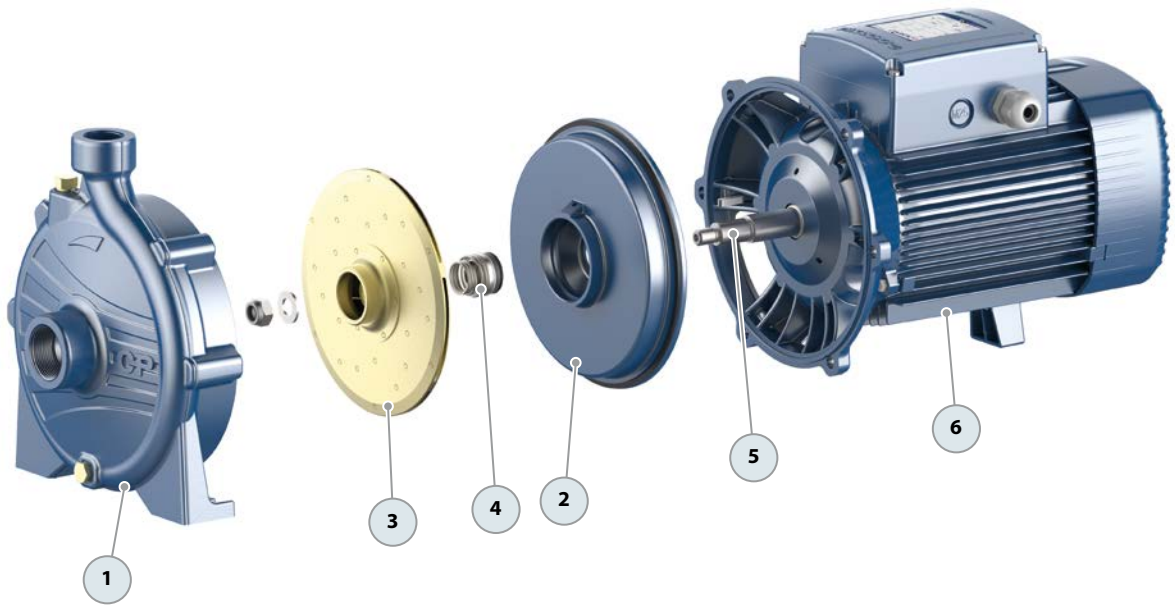

2CP 25/130 Twin impeller centrifugal pump

Clean water Domestic use

INSTALLATION AND USE

Designed to transfer clean water free from abrasive particles and liquids that will not damage the pump's components. They can be used in a variety of applications thanks to their high performance and adaptability.

They are an ideal choice for domestic water distribution when used with pressure tanks.

APPLICATION LIMITS

- Manometric suction head up to **7 m**
- Liquid temperature between **-10 °C** and **+90 °C**
- Ambient temperature up to **+40 °C**
- Maximum working pressure **6 bar**

AVAILABLE UPON REQUEST

※ Mechanical seal options available
※ Different voltage requirements 60 Hz frequency

CURVES AND PERFORMANCE DATA – HS=0 m 50 Hz

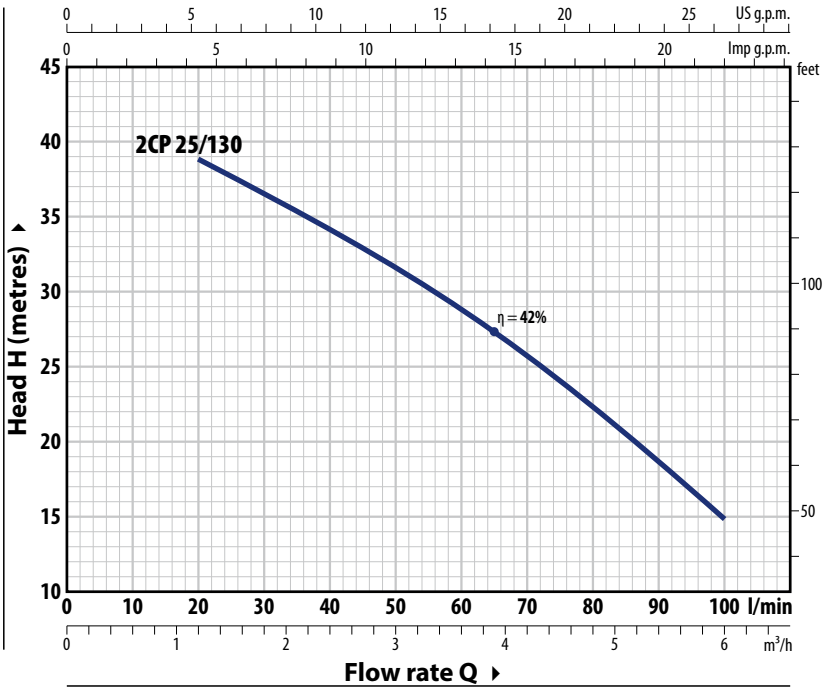

CONSUMPTIONS

TYPE	VOLTAGE
Single-phase	**230 V**
2CPm 25/130	6.3 A

TYPE	VOLTAGE	
Three-phase	**230 V - Δ**	**400 V - ⅄**
2CP 25/130	4.5 A	2.6 A

TYPE		POWER (P2)				Q										
							m³/h	0	1.2	1.8	2.4	3	3.6	4.2	4.8	5.4	6
Single-phase	**Three-phase**	**kW**	**HP**	**1~**	**3~**		l/min	**0**	**20**	**30**	**40**	**50**	**60**	**70**	**80**	**90**	**100**
2CPm 25/130	**2CP 25/130**	0.75	1	**IE2**	**IE3**	**H** metres		42	39	37	34.5	31.5	28.5	25.5	22	18	15

Q = Flow rate **H** = Total manometric head **HS** = Suction height

Performance curves comply with EN ISO 9906 Grade 3B tolerance limits.

DIMENSIONS AND WEIGHT

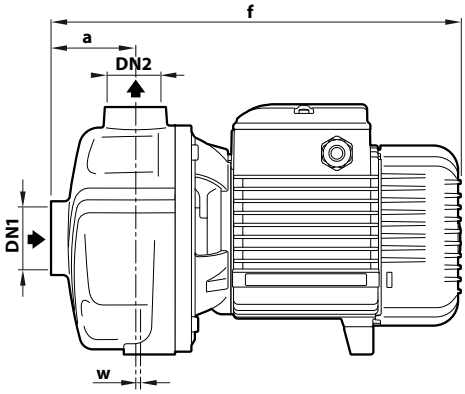

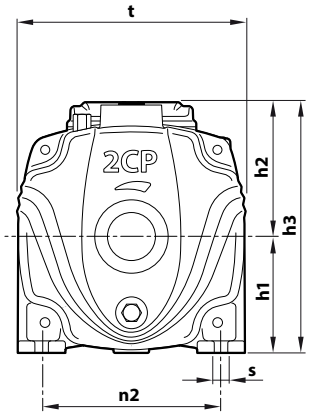

TYPE		PORTS		DIMENSIONS mm									kg	
Single-phase	**Three-phase**	**DN1**	**DN2**	a	f	h1	h2	h3	t	n2	w	s	1~	3~
2CPm 25/130	**2CP 25/130**	**1¼"**	**1"**	73	332	92	108	200	180	142	2.5	10	15.5	15.4

MATERIALS AND COMPONENTS

1	**Pump body**	Cast iron with ISO 228/1 threaded ports (Start of production with new design 06.2024)
2	**Cover**	Stainless steel **AISI 304**
3	**Impellers**	Stainless steel **AISI 304**
4	**Diffusers**	Stainless steel **AISI 304**
5	**Mechanical seal**	Seal / Shaft / Materials **AR-14** / Ø 14 mm / Ceramic / Graphite / NBR
6	**Motor shaft**	Stainless steel **AISI 431**
7	**Electric motor**	**2CPm 25/130**: single-phase 230 V - 50Hz with winding integrated thermal motor protection **2CP 25/130**: three-phase 230/400 V - 50 Hz ※ Pumps are equipped with high-efficiency motors (IEC 60034-30-1) class **IE2** for single-phase models class **IE3** for three-phase models Continuous running duty **S1**

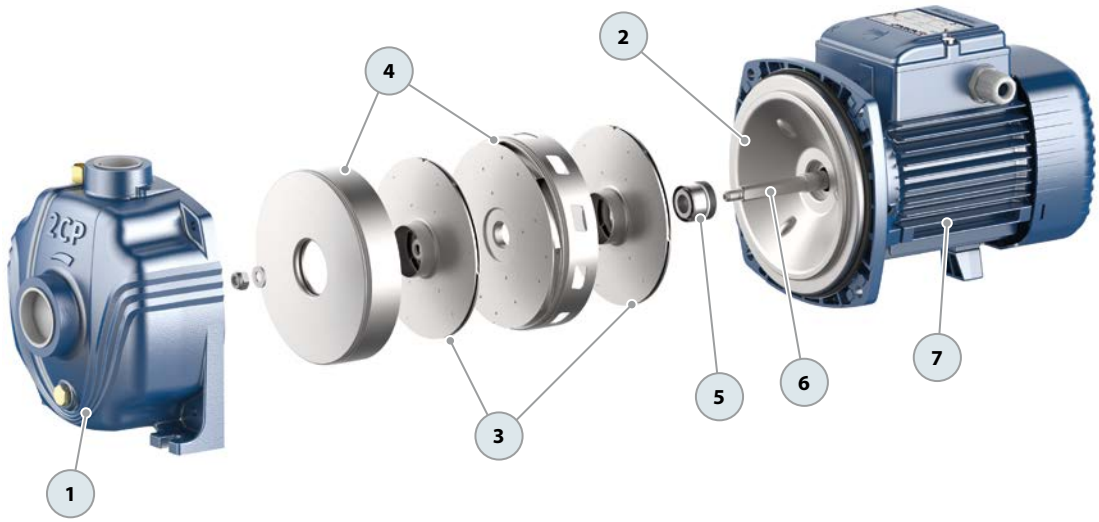

2CP Twin impeller centrifugal pumps

Clean water
Domestic use
Civil use
Industrial use

PERFORMANCE RANGE

- Flow rate up to **450 l/min** (27 m³/h)
- Head up to **112 m**

INSTALLATION AND USE

They are recommended for pumping clean water and liquids that are chemically non-aggressive for the pump materials.

Its high efficiency and adaptability to a wide variety of applications make it an ideal choice in the domestic, civil and industrial sectors, particularly for water distribution in conjunction with autoclave tanks, for increasing network pressure, and for fire-fighting units.

ELECTRIC MOTOR

The three-phase pumps are equipped with newly developed electric motors designed to work with inverters, which guarantee stable and quiet operation.

Efficiency class **IE3** for three-phase motors and **IE2** for single-phase motors, with class F insulation and IPX4 protection.

APPLICATION LIMITS

- Manometric suction head up to **7 m**
- Liquid temperature between from **-10 °C** and **+90 °C**
- Ambient temperature between **-10 °C** and **+40 °C**
- Maximum working pressure **10 bar**

AVAILABLE UPON REQUEST

※ Mechanical seal options available
※ Different voltage requirements 60 Hz frequency
※ IPX5 protection for:
- 2CP32/200 – 2CP40/180
- 2CP32/210 – 2CP40/200

CURVES AND PERFORMANCE DATA – HS=0 m

50 Hz

2CP 25/14

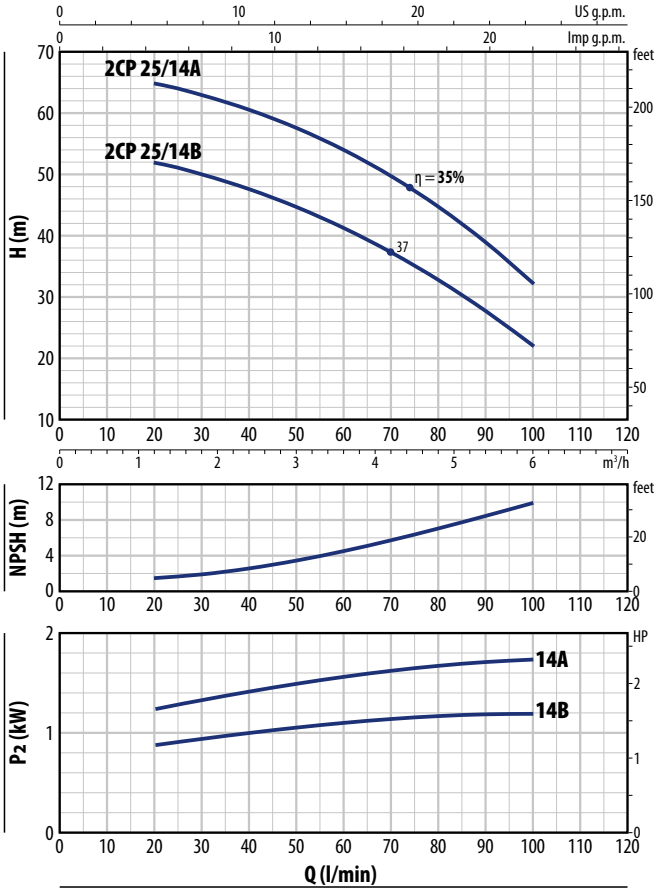

2CP 25/16

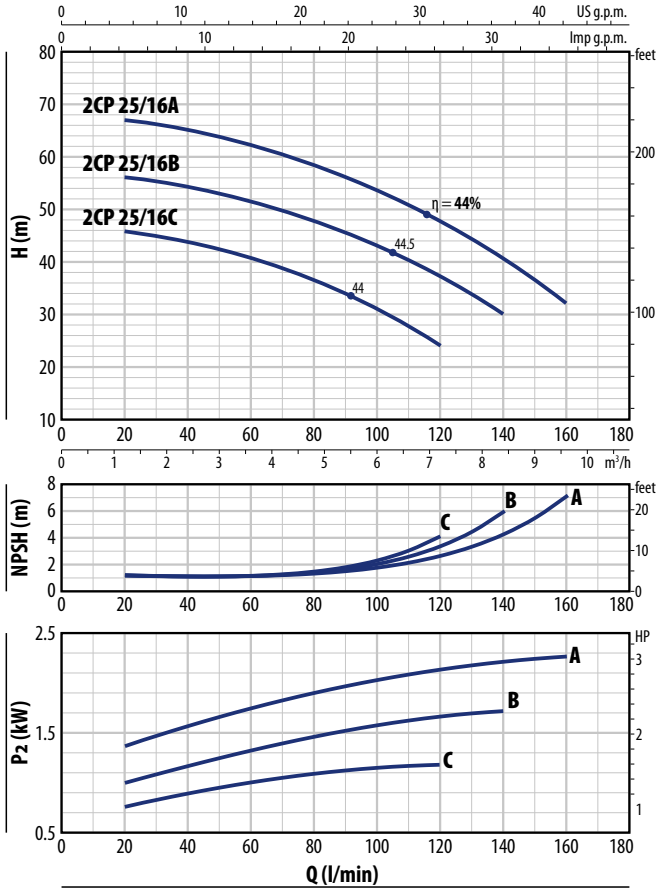

2CP 25/14

TYPE		POWER (P2)				Q	m³/h	0	1.2	1.8	2.4	3	3.6	4.2	4.8	5.4	6
Single-phase	Three-phase	kW	HP	1~	3~		l/min	**0**	**20**	**30**	**40**	**50**	**60**	**70**	**80**	**90**	**100**
2CPm 25/14B	**2CP 25/14B**	1.1	1.5	IE2	IE3	**H** metres		54	52	50	47.5	44.5	41	37	32.5	27.5	22
2CPm 25/14A	**2CP 25/14A**	1.5	2					67	65	63	60.5	57.5	54	49.5	44.5	39	32

2CP 25/16

TYPE		POWER (P2)				Q	m³/h	0	1.2	2.4	3.6	4.8	6	7.2	8.4	9.6
Single-phase	Three-phase	kW	HP	1~	3~		l/min	**0**	**20**	**40**	**60**	**80**	**100**	**120**	**140**	**160**
2CPm 25/16C	**2CP 25/16C**	1.1	1.5	IE2	IE3	**H** metres		47	46	44	40.5	36	30.5	24		
2CPm 25/16B	**2CP 25/16B**	1.5	2					58	56	54	51	47.5	43	37	30	
2CPm 25/16A	**2CP 25/16A**	2.2	3					68	67	65	62	58.5	54	48	40.5	32

Q = Flow rate **H** = Total manometric head **HS** = Suction height

Performance curves comply with EN ISO 9906 Grade 3B tolerance limits.

CURVES AND PERFORMANCE DATA – HS=0 m

50 Hz

2CP 32/200

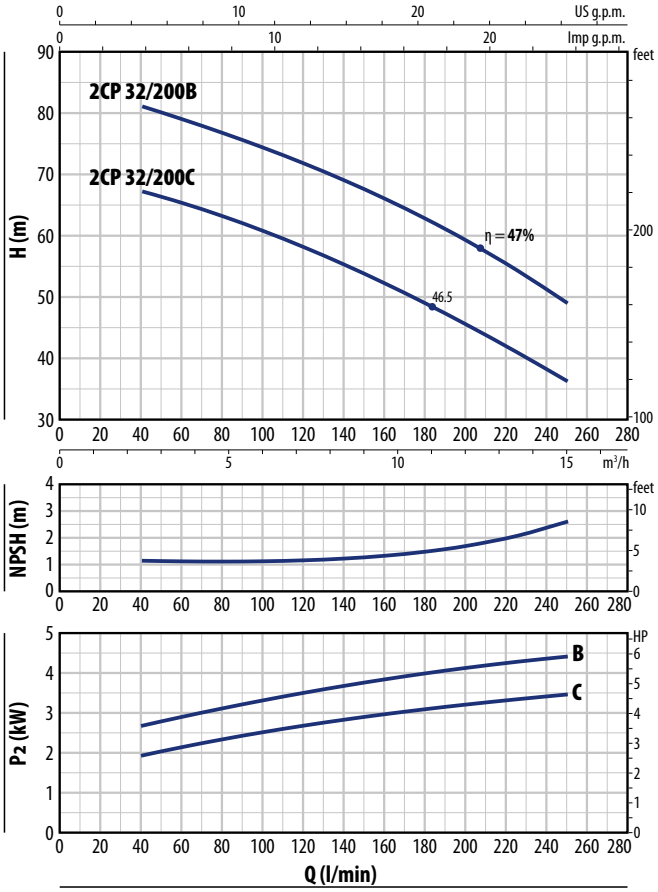

2CP 32/210

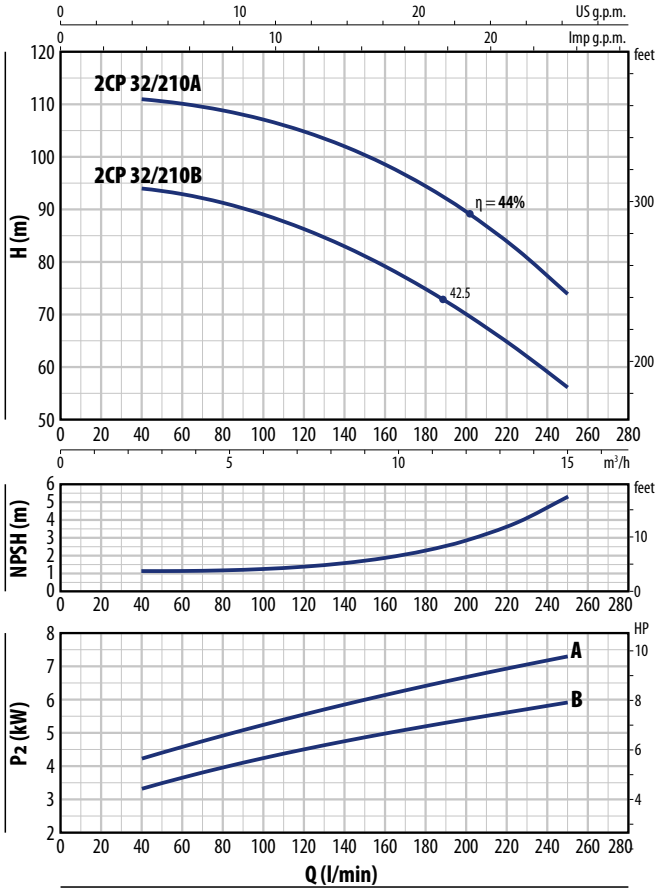

2CP 32/200

TYPE	POWER (P2)			Q m³/h	0	2.4	3.6	4.8	6	7.2	8.4	9.6	10.8	12	13.5	15
Three-phase	**kW**	**HP**	**3~**	l/min	**0**	**40**	**60**	**80**	**100**	**120**	**140**	**160**	**180**	**200**	**225**	**250**
2CP 32/200C	3	4	**IE3**	**H** metres	70	67	65	63	60.5	58	55	52	48.5	45.5	41	36
2CP 32/200B	4	5.5			85	81	79	77	74.5	71.5	69	66	62.5	59	54.5	49

2CP 32/210

TYPE	POWER (P2)			Q m³/h	0	2.4	3.6	4.8	6	7.2	8.4	9.6	10.8	12	13.5	15
Three-phase	**kW**	**HP**	**3~**	l/min	**0**	**40**	**60**	**80**	**100**	**120**	**140**	**160**	**180**	**200**	**225**	**250**
2CP 32/210B	5.5	7.5	**IE3**	**H** metres	94	94	93	91	89	86	83	79	75	70	63.5	56
2CP 32/210A	7.5	10			112	111	110	109	107	105	102	99	95	90	82.5	74

Q = Flow rate **H** = Total manometric head **HS** = Suction height

Performance curves comply with EN ISO 9906 Grade 3B tolerance limits.

CURVES AND PERFORMANCE DATA – HS=0 m

50 Hz

2CP 40/180

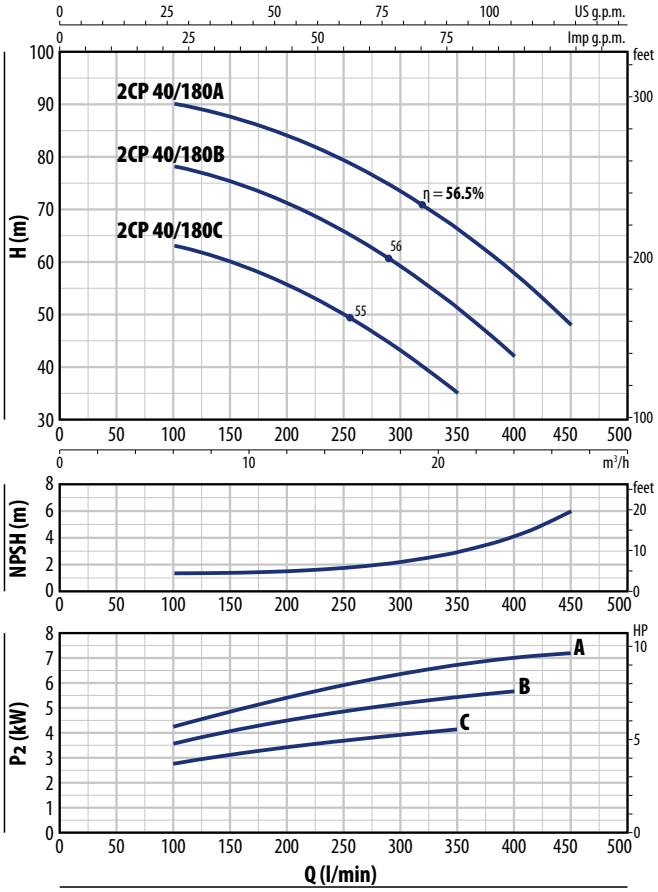

2CP 40/200

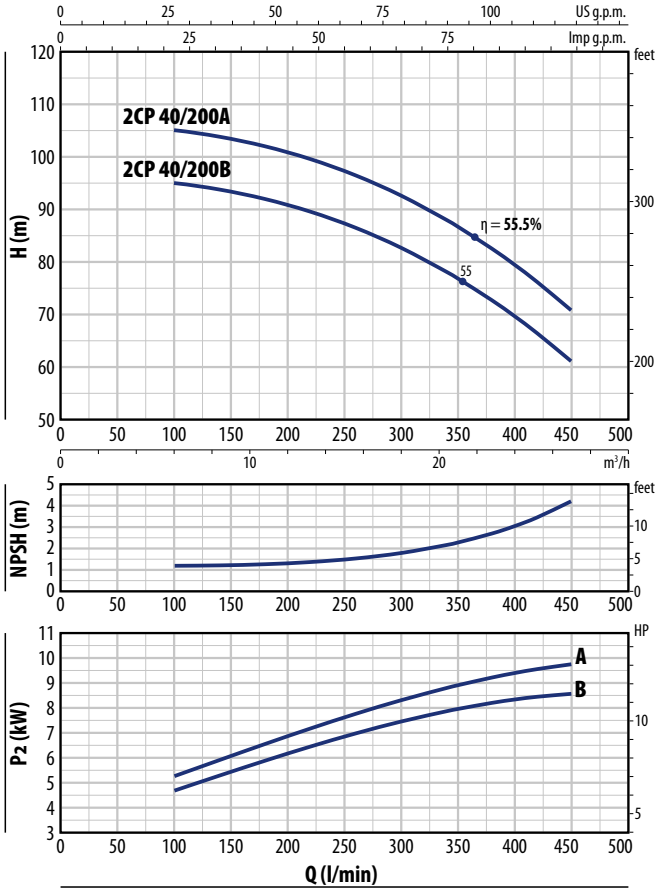

2CP 40/180

TYPE	POWER (P2)			Q	m³/h	0	6	9	12	15	18	21	24	27
Three-phase	**kW**	**HP**	**3~**		l/min	**0**	**100**	**150**	**200**	**250**	**300**	**350**	**400**	**450**
2CP 40/180C	4	5.5				65	63	60	55.5	50	43	35		
2CP 40/180B	5.5	7.5	**IE3**	**H** metres		80	78	75	71	65.5	59	51	42	
2CP 40/180A	7.5	10				92	90	87.5	84	79	73.5	66	58	48

2CP 40/200

TYPE	POWER (P2)			Q	m³/h	0	6	9	12	15	18	21	24	27
Three-phase	**kW**	**HP**	**3~**		l/min	**0**	**100**	**150**	**200**	**250**	**300**	**350**	**400**	**450**
2CP 40/200B	9.2	12.5	**IE3**	**H** metres		96	95	93	91	87	83	77	69.5	61
2CP 40/200A	11	15				106	105	103	101	97	93	87	79.5	71

Q = Flow rate **H** = Total manometric head **HS** = Suction height

Performance curves comply with EN ISO 9906 Grade 3B tolerance limits.

ABSORPTION

TYPE **Single-phase**	VOLTAGE **230 V**
2CPm 25/14B	7.7 A
2CPm 25/14A	10.5 A
2CPm 25/16C	7.7 A
2CPm 25/16B	10.0 A
2CPm 25/16A	13.8 A

TYPE	VOLTAGE			
Three-phase	**230 V - Δ**	**400 V - ⅄**	**400 V - Δ**	**690 V - ⅄**
2CP 25/14B	5.4 A	3.1 A	–	–
2CP 25/14A	6.9 A	4.0 A	–	–
2CP 25/16C	5.4 A	3.1 A	–	–
2CP 25/16B	6.9 A	4.0 A	–	–
2CP 25/16A	9.2 A	5.3 A	–	–
2CP 32/200C	12.8 A	7.4 A	–	–
2CP 32/200B	18.2 A	10.5 A	–	–
2CP 32/210B	–	–	12.5 A	7.2 A
2CP 32/210A	–	–	16.0 A	9.2 A
2CP 40/180C	17.0 A	9.8 A	–	–
2CP 40/180B	–	–	12.3 A	7.1 A
2CP 40/180A	–	–	15.4 A	8.9 A
2CP 40/200B	–	–	17.5 A	10.1 A
2CP 40/200A	–	–	20.0 A	11.6 A

DIMENSIONS AND WEIGHT

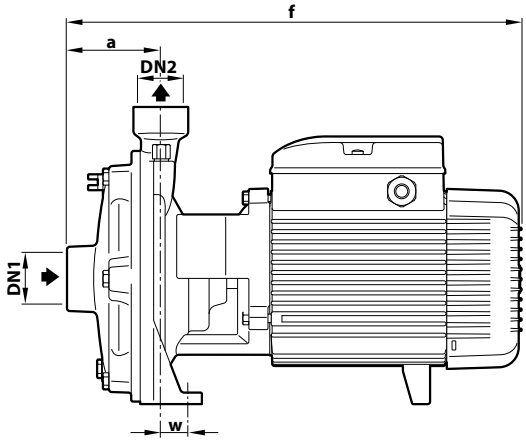

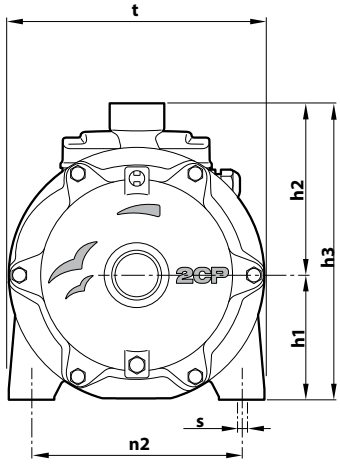

TYPE		PORTS		DIMENSIONS mm									kg	
Single-phase	**Three-phase**	**DN1**	**DN2**	a	f	h1	h2	h3	t	n2	w	s	1~	3~
2CPm 25/14B	**2CP 25/14B**	**1¼"**	**1"**	82	404	93	130	223	200	162	17	10	20.8	20.8
2CPm 25/14A	**2CP 25/14A**					110	151	261	225	185	26	11	24.7	24.6
2CPm 25/16C	**2CP 25/16C**					93	130	223	200	162	17	10	21.3	20.6
2CPm 25/16B	**2CP 25/16B**					110	151	261	226	185	26	11	24.5	24.4
2CPm 25/16A	**2CP 25/16A**				424								27.1	27.3
–	**2CP 32/200C**	**1½"**	**1¼"**	95	464	132	172	304	266	206	19	14	–	38.9
–	**2CP 32/200B**												–	42.0
–	**2CP 32/210B**	**2"**		108	541	139	195	334	292	232	21		–	54.9
–	**2CP 32/210A**												–	60.0
–	**2CP 40/180C**		**1½"**		496								–	48.7
–	**2CP 40/180B**				542								–	53.0
–	**2CP 40/180A**												–	59.0
–	**2CP 40/200B**			110	620	160	195	355	298				–	93.0
–	**2CP 40/200A**												–	92.0

PALLET CAPACITY

TYPE **Single-phase**	 **Three-phase**	NO. OF PUMPS
2CPm 25/14B	**2CP 25/14B**	50
2CPm 25/14A	**2CP 25/14A**	50
2CPm 25/16C	**2CP 25/16C**	50
2CPm 25/16B	**2CP 25/16B**	50
2CPm 25/16A	**2CP 25/16A**	35

TYPE **Three-phase**	NO. OF PUMPS
2CP 32/200C	18
2CP 32/200B	18
2CP 32/210B	12
2CP 32/210A	12
2CP 40/180C	12
2CP 40/180B	12
2CP 40/180A	12
2CP 40/200B	6
2CP 40/200A	6

MATERIALS AND COMPONENTS

1	**Suction body**	Cast iron with ISO 228/1 threaded suction port
2	**Delivery port**	Cast iron with ISO 228/1 threaded delivery port
3	**Impellers**	Brass

4 Mechanical seal

Water pump	Seal	Shaft	Materials
2CP 25/14 2CP 25/16	**FN-18**	Ø 18 mm	Graphite / Ceramic / NBR
2CP 32/200	**FN-20**	Ø 20 mm	Graphite / Ceramic / NBR
2CP 32/210 2CP 40/180	**FN-24**	Ø 24 mm	Graphite / Ceramic / NBR
2CP 40/200	**FN-32 NU**	Ø 32 mm	Graphite / Ceramic / NBR

5	**Motor shaft**	Stainless steel **AISI 431**
6	**Electric motor**	**2CPm**: single-phase 230 V - 50Hz with winding integrated thermal motor protection **2CP**: three-phase 230/400 V - 50 Hz up to 4 kW 400/690 V - 50 Hz 5.5 to 11 kW ※ Pumps are equipped with high-efficiency motors (IEC 60034-30-1) class **IE2** for single-phase models class **IE3** for three-phase models Continuous running duty **S1**

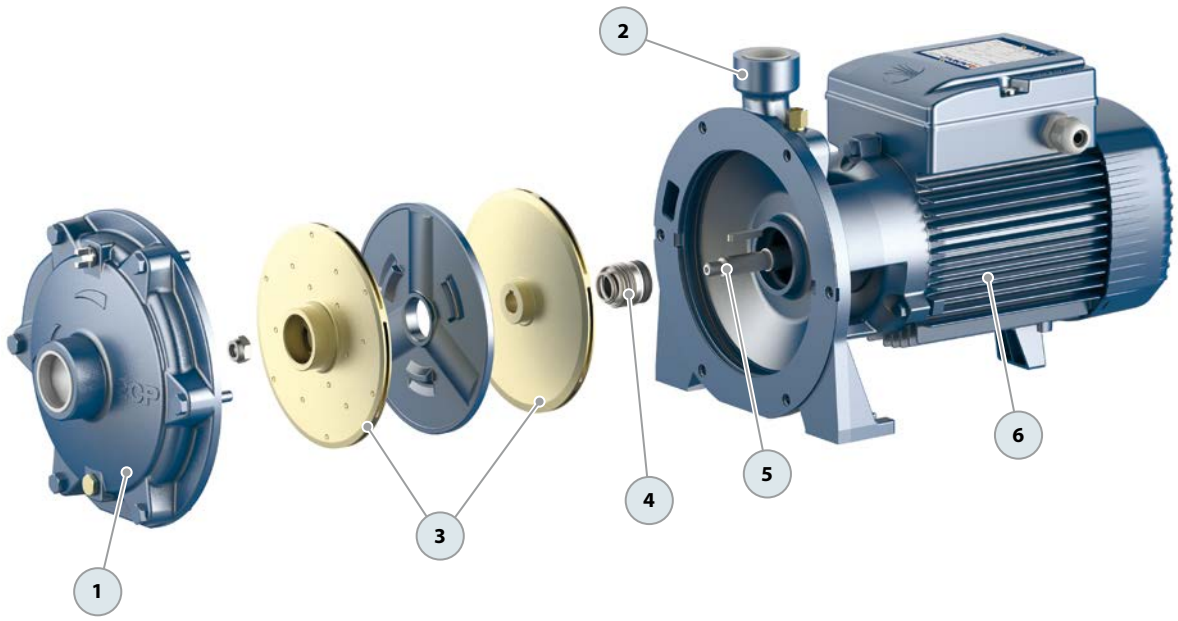

2-5CP - I Multi-stage centrifugal pumps

Clean water

Domestic use

※ Particularly quiet, energy-efficient multi-stage pumps equipped with stainless steel impeller

PERFORMANCE RANGE

- Flow rate up to **130 l/min** (7.8 m³/h)
- Head up to **67 m**

INSTALLATION AND USE

They are recommended for pumping clean water and chemically non-aggressive liquids for the pump materials.

Due to their reliability and quietness, they are widely used in the domestic sector and especially for water distribution coupled with small or medium-sized autoclave tanks, for irrigating vegetable gardens or orchards, etc.

ELECTRIC MOTOR

Three-phase pumps are equipped with high-efficiency motors (IEC 60034-30-1).

Efficiency class **IE3** for three-phase motors and **IE2** for single-phase motors, with class F insulation and IPX4 protection.

APPLICATION LIMITS

- Manometric suction head up to **7 m**
- Liquid temperature between **-10 °C** and **+60 °C**
- Ambient temperature up to **+40 °C**
- Maximum working pressure **6 bar**

PATENTS - TRADE MARKS - MODELS

- Registered Community Model No. 002073635-0001

AVAILABLE UPON REQUEST

※ Technopolymer impeller (cost-effective version)
※ Different voltage requirements 60 Hz frequency

CURVES AND PERFORMANCE DATA – HS=0 m

50 Hz

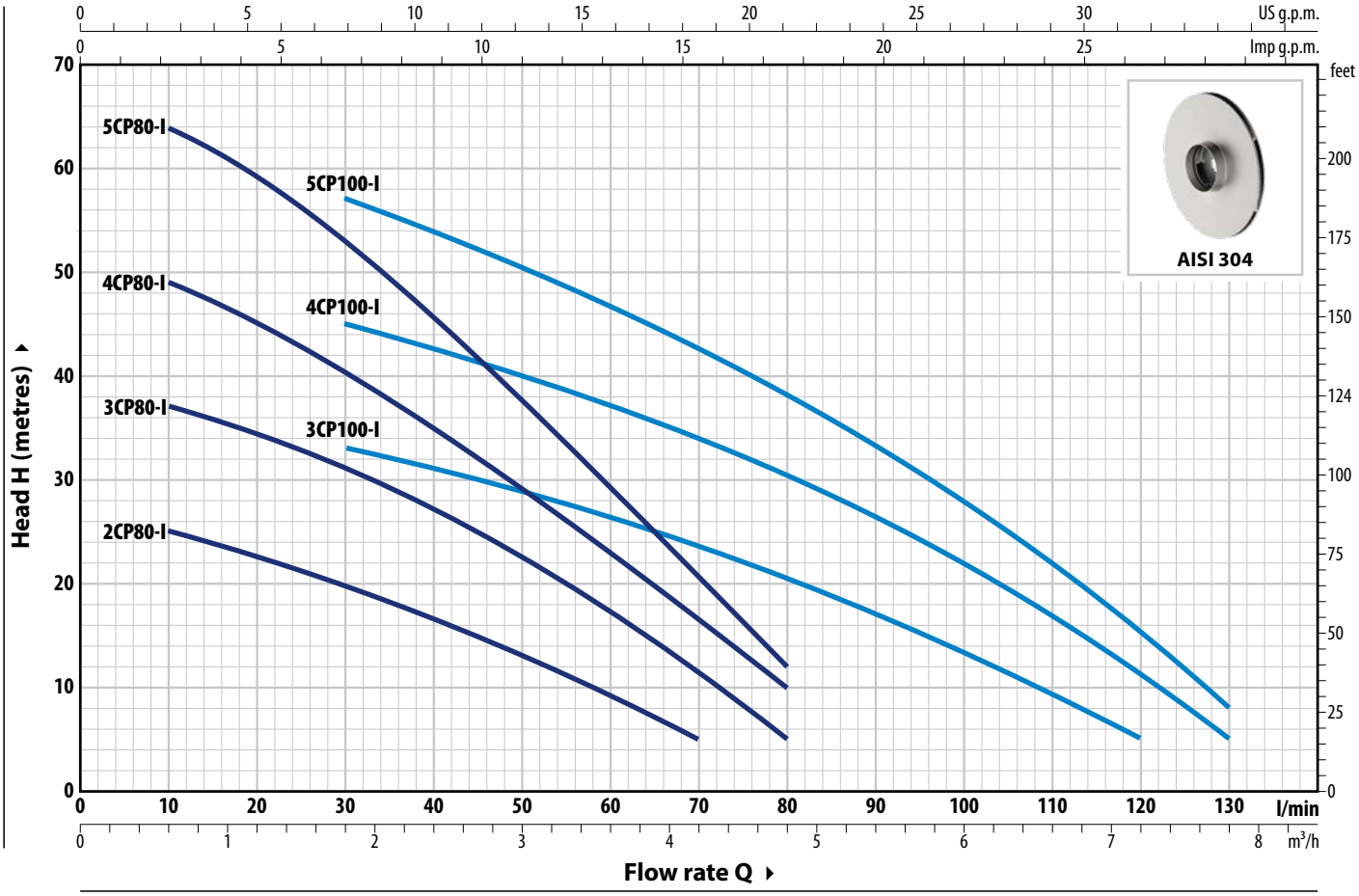

TYPE		POWER (P2)				Q	m³/h	0	0.3	0.6	1.2	1.8	2.4	3.0	3.6	4.2	4.8	5.4	6.0	6.6	7.2	7.8
Single-ph.	**Three-ph.**	**kW**	**HP**	**1~**	**3~**		l/min	**0**	**5**	**10**	**20**	**30**	**40**	**50**	**60**	**70**	**80**	**90**	**100**	**110**	**120**	**130**
2CPm 80-I	**2CP 80-I**	0.30	0.40					27	26	25	22.5	20	16.5	13	9	5						
3CPm 80-I	**3CP 80-I**	0.45	0.60					40	38	37	34.5	31	27	22.5	17	11	5					
4CPm 80-I	**4CP 80-I**	0.55	0.75					52	50	49	44.5	40	34	28.5	22.5	16	10					
5CPm 80-I	**5CP 80-I**	0.75	1	**IE2**	**IE3**	**H** metres		67	66	64	59	53	45.5	37.5	29.5	20.5	12					
3CPm 100-I	**3CP 100-I**	0.55	0.75					38	37	36	34.5	33	31	28	26	23	20	17	13.5	10	5	
4CPm 100-I	**4CP 100-I**	0.75	1					50	50	49	47	45	42	39.5	37	34	30.5	26.5	22	17	11	5
5CPm 100-I	**5CP 100-I**	0.90	1.25					63	62	61.5	59.5	57	53.5	50.5	46.5	42.5	38	33	28	22	15	8

Q = Flow rate **H** = Total manometric head **HS** = Suction height

Performance curves comply with EN ISO 9906 Grade 3B tolerance limits.

ABSORPTION

TYPE	VOLTAGE
Single-phase	**230 V**
2CPm 80-I	2.3 A
3CPm 80-I	3.2 A
4CPm 80-I	3.9 A
5CPm 80-I	5.3 A
3CPm 100-I	4.1 A
4CPm 100-I	5.8 A
5CPm 100-I	6.8 A

TYPE	VOLTAGE	
Three-phase	**230 V - Δ**	**400 V - ⅄**
2CP 80-I	1.7 A	1.0 A
3CP 80-I	2.6 A	1.5 A
4CP 80-I	3.5 A	2.0 A
5CP 80-I	4.3 A	2.5 A
3CP 100-I	3.5 A	2.0 A
4CP 100-I	4.3 A	2.5 A
5CP 100-I	4.3 A	2.5 A

DIMENSIONS AND WEIGHT

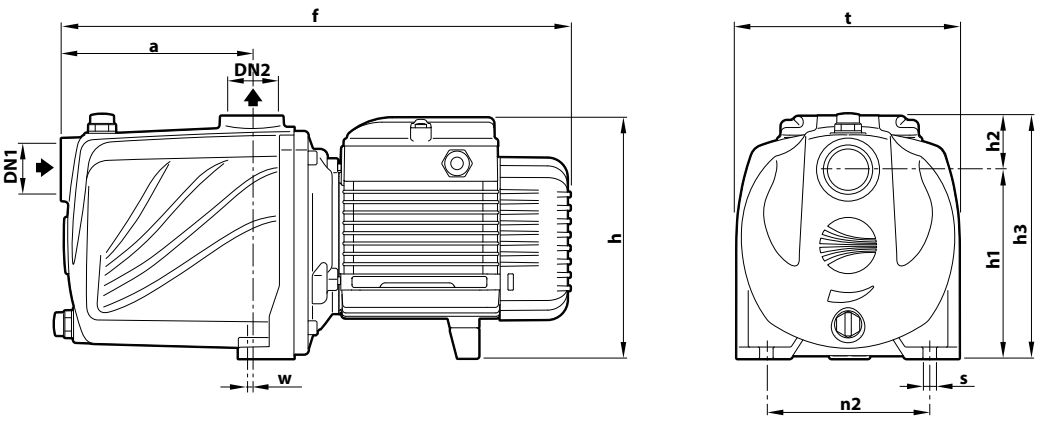

TYPE		PORTS		DIMENSIONS mm										kg	
Single-phase	**Three-phase**	**DN1**	**DN2**	a	f	h	h1	h2	h3	t	n2	w	s	1~	3~
2CPm 80-I	**2CP 80-I**	**1”**	**1”**	110	338	172	134	38	172	158	118	1	10	9.7	9.7
3CPm 80-I	**3CP 80-I**													10.7	10.7
4CPm 80-I	**4CP 80-I**			135	363									12.2	11.5
5CPm 80-I	**5CP 80-I**				382	192 *								15.1	15.1
3CPm 100-I	**3CP 100-I**			110	338	172								11.4	10.7
4CPm 100-I	**4CP 100-I**			135	382	192 *								14.9	15.5
5CPm 100-I	**5CP 100-I**													14.9	15.7

(*) h=221 mm for single-phase 110 V versions

PALLET CAPACITY

TYPE		NO. OF PUMPS
Single-phase	**Three-phase**	
2CPm 80-I	**2CP 80-I**	84
3CPm 80-I	**3CP 80-I**	84
4CPm 80-I	**4CP 80-I**	84
5CPm 80-I	**5CP 80-I**	72
3CPm 100-I	**3CP 100-I**	84
4CPm 100-I	**4CP 100-I**	72
5CPm 100-I	**5CP 100-I**	72

MATERIALS AND COMPONENTS

1	**Pump body**	Cast iron with cataphoresis treatment with ISO 228/1 threaded ports
2	**Cover**	Stainless steel **AISI 304**
3	**Impellers**	Stainless steel **AISI 304**
4	**Diffusers**	Noryl™ complete with wear rings

5 Mechanical seal

Seal	Shaft	Materials
AR-13	Ø 13 mm	Ceramic / Graphite / NBR

6	**Motor shaft**	Stainless steel **AISI 431**

7 Electric motor

2-5CPm -I: single-phase 230 V - 50 Hz with winding integrated thermal motor protection
2-5CP -I: three-phase 230/400 V - 50 Hz

※ Pumps are equipped with high-efficiency motors (IEC 60034-30-1)
class **IE2** for single-phase models
class **IE3** for three-phase models

Continuous running duty **S1**

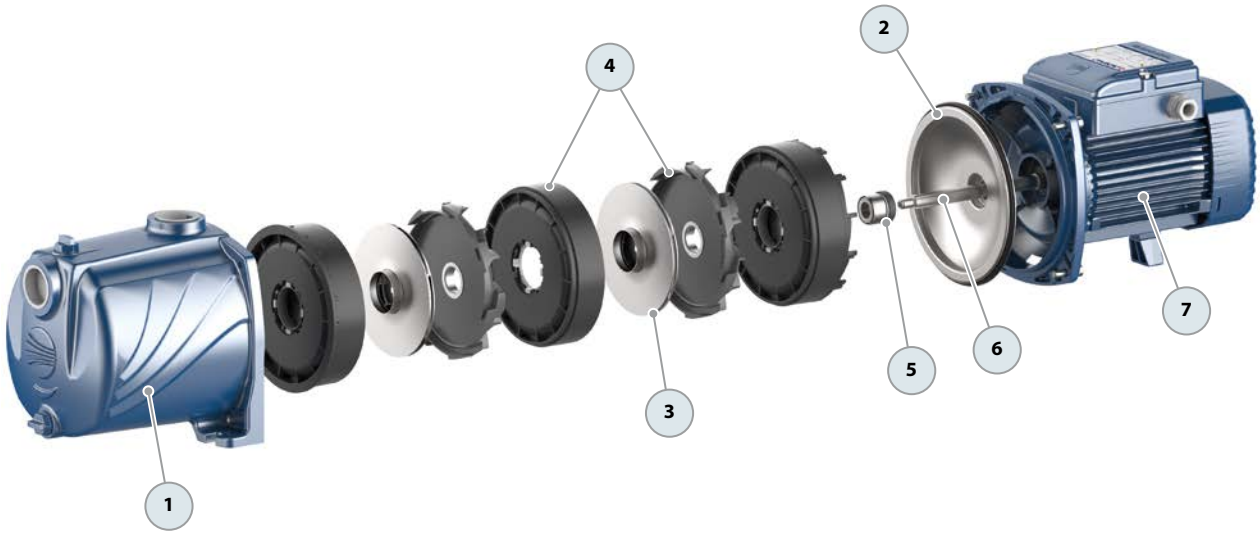

2-5CR Multi-stage centrifugal pumps

Clean water

Domestic use

Civil use

※ Quiet, energy-efficient stainless steel multi-stage pumps

※ Pump body: **Stainless steel AISI 304**
※ Cover: **Stainless steel AISI 304**
※ Impellers: **Stainless steel AISI 304**
※ Shaft: **Stainless steel AISI 431**

PERFORMANCE RANGE

- Flow rate up to **130 l/min** (7.8 m³/h)
- Head up to **67 m**

INSTALLATION AND USE

Designed to transfer clean water free from abrasive particles and liquids that will not damage the pump's components. Highly reliable and quiet, they are suitable for domestic applications.

They work seamlessly with pressure tanks, offering an ideal setup for all irrigation requirements.

ELECTRIC MOTOR

The three-phase pumps are equipped with newly developed electric motors designed to work with inverters, which guarantee stable and quiet operation.

Efficiency class **IE3** for three-phase motors and **IE2** for single-phase motors, with class F insulation and IPX4 protection.

APPLICATION LIMITS

- Manometric suction head up to **7 m**
- Liquid temperature between **-10 °C** and **+60 °C**
- Ambient temperature up to **+40 °C**
- Maximum working pressure **7 bar**

AVAILABLE UPON REQUEST

※ Technopolymer impeller (cost-effective version)
※ Mechanical seal options available
※ Different voltage requirements 60 Hz frequency
※ Certified pumps WRAS APPROVED PRODUCT

CURVES AND PERFORMANCE DATA – HS=0 m

50 Hz

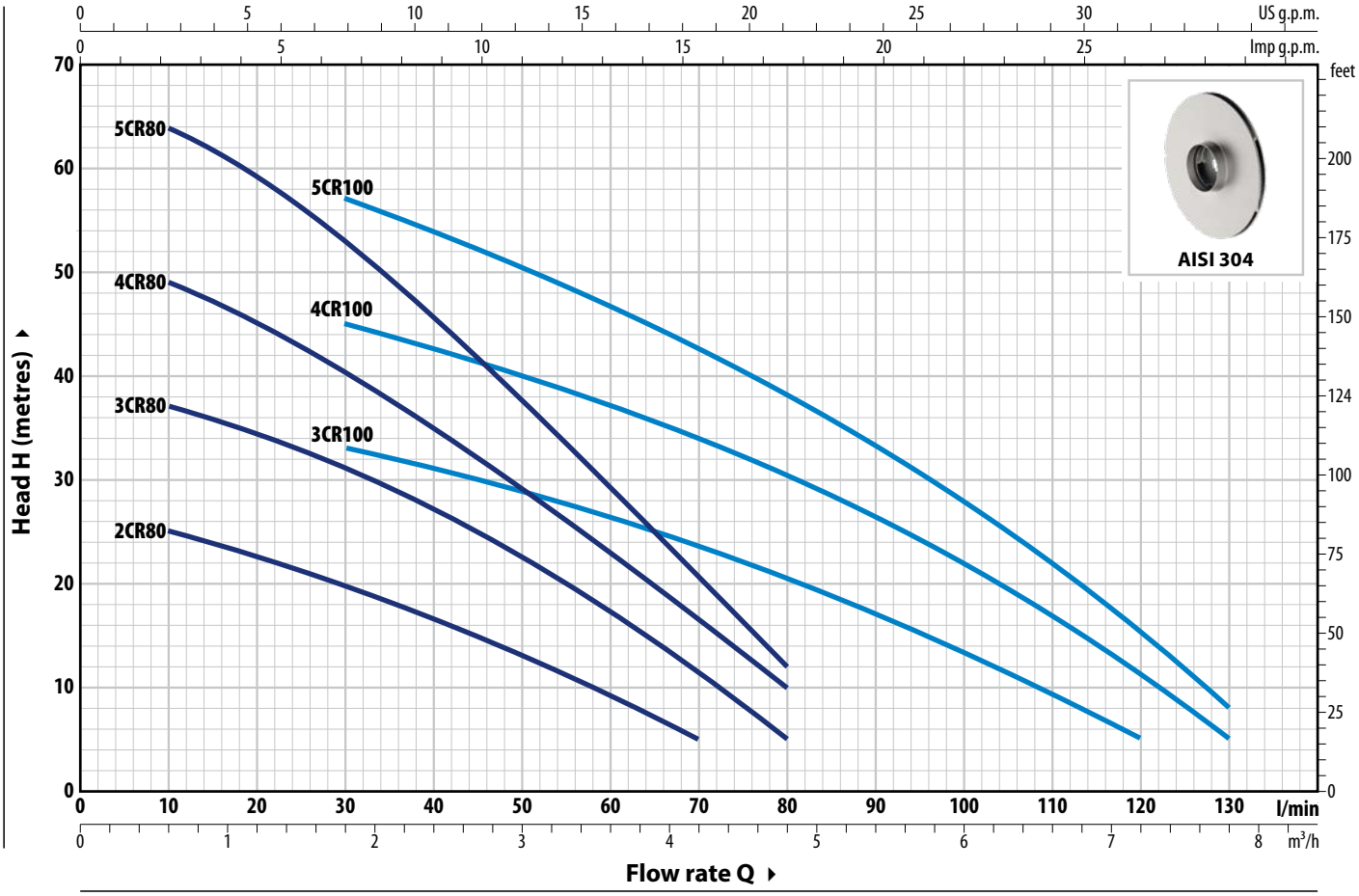

TYPE		POWER (P2)				Q m³/h	0	0.3	0.6	1.2	1.8	2.4	3.0	3.6	4.2	4.8	5.4	6.0	6.6	7.2	7.8
Single-ph.	**Three-ph.**	**kW**	**HP**	**1~**	**3~**	l/min	**0**	**5**	**10**	**20**	**30**	**40**	**50**	**60**	**70**	**80**	**90**	**100**	**110**	**120**	**130**
2CRm 80	**2CR 80**	0.30	0.40				27	26	25	22.5	20	16.5	13	9	5						
3CRm 80	**3CR 80**	0.45	0.60				40	38	37	34.5	31	27	22.5	17	11	5					
4CRm 80	**4CR 80**	0.55	0.75				52	50	49	44.5	40	34	28.5	22.5	16	10					
5CRm 80	**5CR 80**	0.75	1	**IE2**	**IE3**	**H** metres	67	66	64	59	53	45.5	37.5	29.5	20.5	12					
3CRm 100	**3CR 100**	0.55	0.75				38	37	36	34.5	33	31	28	26	23	20	17	13.5	10	5	
4CRm 100	**4CR 100**	0.75	1				50	50	49	47	45	42	39.5	37	34	30.5	26.5	22	17	11	5
5CRm 100	**5CR 100**	0.90	1.25				63	62	61.5	59.5	57	53.5	50.5	46.5	42.5	38	33	28	22	15	8

Q = Flow rate **H** = Total manometric head **HS** = Suction height

Performance curves comply with EN ISO 9906 Grade 3B tolerance limits.

ABSORPTION

TYPE	VOLTAGE
Single-phase	**230 V**
2CRm 80	2.2 A
3CRm 80	3.2 A
4CRm 80	3.9 A
5CRm 80	5.5 A
3CRm 100	3.9 A
4CRm 100	5.8 A
5CRm 100	6.8 A

TYPE	VOLTAGE	
Three-phase	**230 V - Δ**	**400 V - ⅄**
2CR 80	1.7 A	1.0 A
3CR 80	2.6 A	1.5 A
4CR 80	3.5 A	2.0 A
5CR 80	4.3 A	2.5 A
3CR 100	3.5 A	2.0 A
4CR 100	4.0 A	2.3 A
5CR 100	4.3 A	2.5 A

DIMENSIONS AND WEIGHT

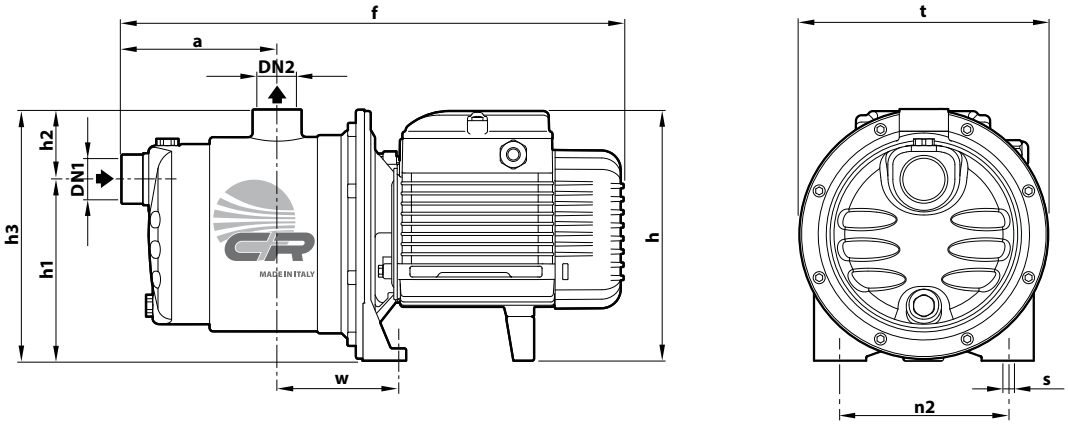

TYPE		PORTS		DIMENSIONS mm										kg	
Single-phase	**Three-phase**	**DN1**	**DN2**	a	f	h	h1	h2	h3	t	n2	w	s	1~	3~
2CRm 80	**2CR 80**			113	367	182							9	6.9	6.9
3CRm 80	**3CR 80**													7.9	7.9
4CRm 80	**4CR 80**			138	392									9.1	8.4
5CRm 80	**5CR 80**	**1"**	**1"**		410	202 *	132	51	183	182	120	87	10	11.8	11.8
3CRm 100	**3CR 100**			113	367	182							9	8.6	7.9
4CRm 100	**4CR 100**			138	410	202 *							10	11.6	11.6
5CRm 100	**5CR 100**													12.4	11.7

(*) h=221 mm for single-phase 110V versions

PALLET CAPACITY

TYPE		NO. OF PUMPS
Single-phase	**Three-phase**	
2CRm 80	**2CR 80**	84
3CRm 80	**3CR 80**	84
4CRm 80	**4CR 80**	72
5CRm 80	**5CR 80**	72
3CRm 100	**3CR 100**	84
4CRm 100	**4CR 100**	72
5CRm 100	**5CR 100**	72

MATERIALS AND COMPONENTS

1	**Pump body**	Stainless steel **AISI 304**,provided with ISO 228/1 threaded ports
2	**Cover**	Stainless steel **AISI 304**
3	**Impellers**	Stainless steel **AISI 304**
4	**Diffusers**	Noryl™ complete with wear rings

5 Mechanical seal

Seal	Shaft	Materials
AR-13	Ø 13 mm	Ceramic / Graphite / NBR

6	**Motor shaft**	Stainless steel **AISI 431**
7	**Electric motor**	**2-5CRm**: single-phase 230 V - 50 Hz with winding integrated thermal motor protection **2-5CR**: three-phase 230/400 V - 50 Hz ※ Pumps are equipped with high-efficiency motors (IEC 60034-30-1) class **IE2** for single-phase models class **IE3** for three-phase models Continuous running duty **S1**

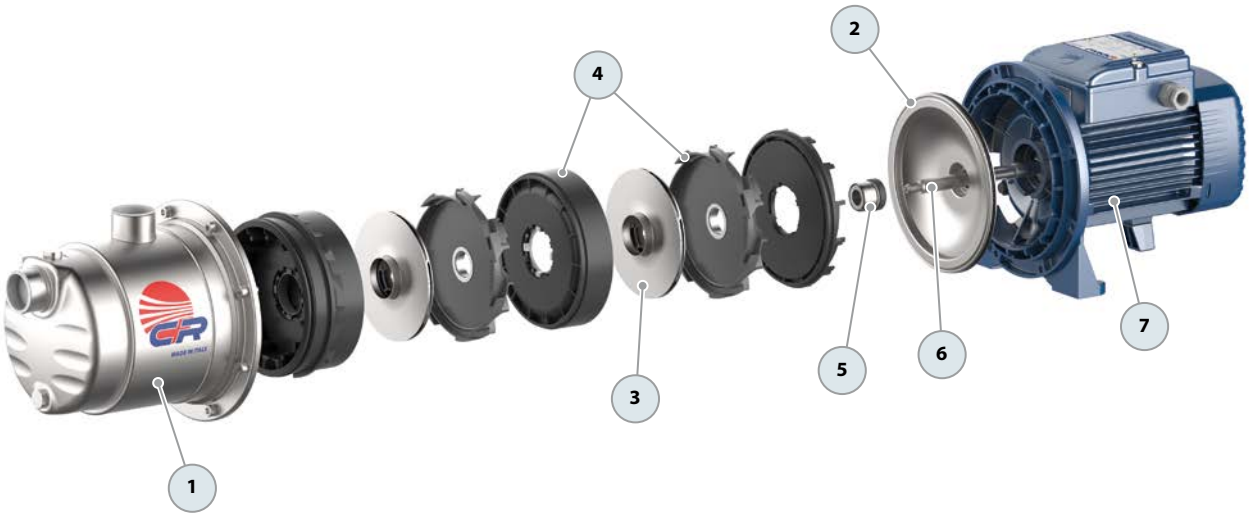

FCR Stainless steel multi-stage centrifugal pumps

Clean water

Domestic use

Civil use

※ Quiet, energy-efficient stainless steel multi-stage pumps

※ Pump body: **Stainless steel AISI 304**
※ Cover: **Stainless steel AISI 304**
※ Impellers: **Stainless steel AISI 304**
※ Shaft: **Stainless steel AISI 431**

PERFORMANCE RANGE

- Flow rate up to **130 l/min** (7.8 m³/h)
- Head up to **67 m**

INSTALLATION AND USE

Quiet performance and efficient energy use make them perfect for water supply and pressurization tasks. They integrate with pressure tanks for optimal water distribution, making them suitable for a wide range of uses from industrial applications to irrigation systems.

ELECTRIC MOTOR

The three-phase pumps are equipped with newly developed electric motors designed to work with inverters, which guarantee stable and quiet operation.

Efficiency class **IE3** for three-phase motors and **IE2** for single-phase motors, with class F insulation and IPX4 protection.

KEY FEATURES

※ Stainless steel components extend service life and enhance efficiency.
※ Multi-stage design results in exceptionally quiet operation.

APPLICATION LIMITS

- Manometric suction head up to **7 m**
- Liquid temperature between **-10 °C** and **+60 °C**
- Ambient temperature up to **+40 °C**
- Maximum working pressure **7 bar**

AVAILABLE UPON REQUEST

※ Mechanical seal options available
※ Different voltage requirements 60 Hz frequency
※ Certified pumps WRAS APPROVED PRODUCT

CURVES AND PERFORMANCE DATA – HS=0 m

50 Hz

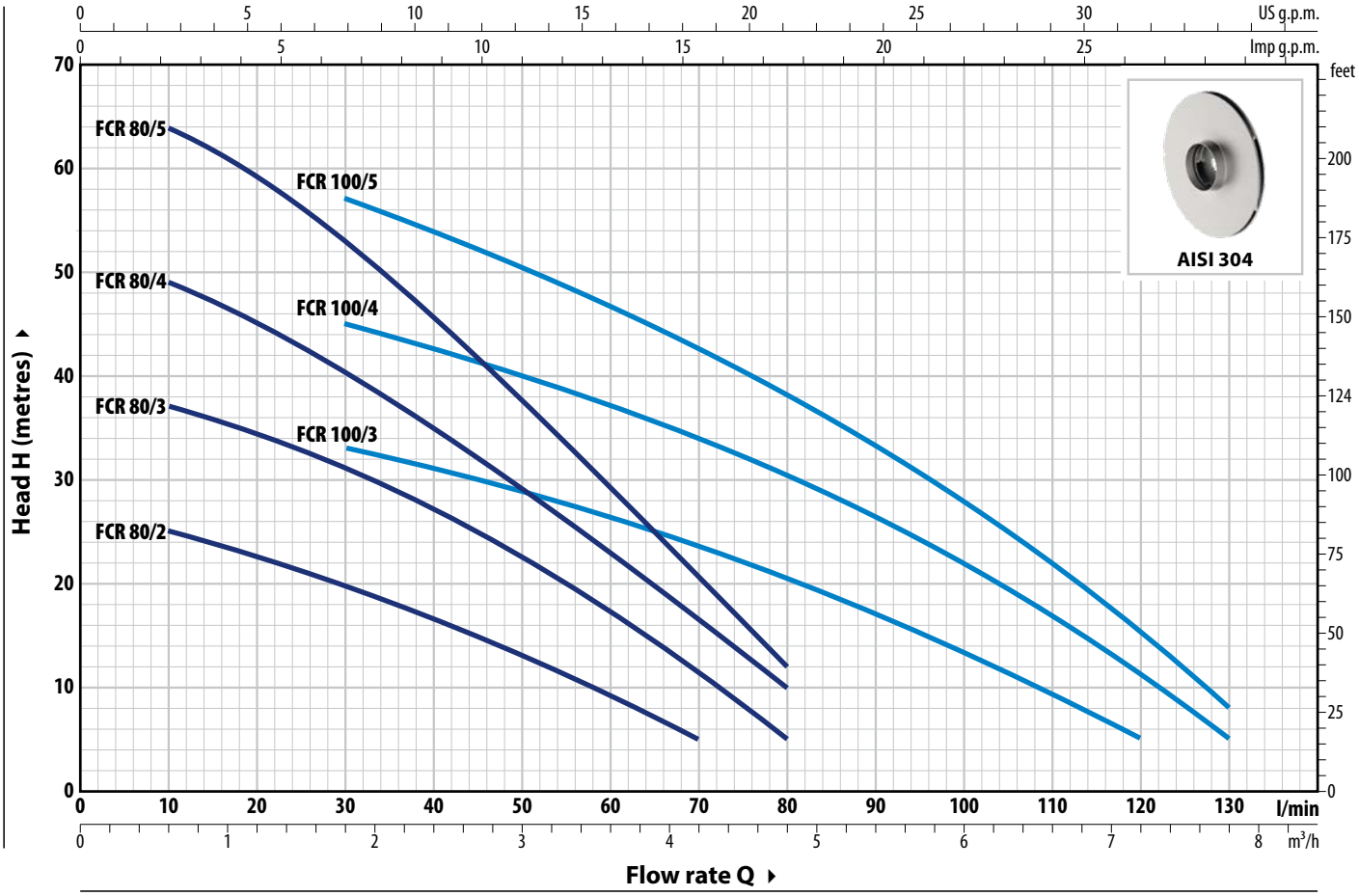

TYPE		POWER (P2)				Q m³/h	0	0.3	0.6	0.9	1.2	1.5	1.8	2.4	3.0	3.6	4.2	4.8	5.4	6.0	6.6	7.2	7.8
Single-ph.	**Three-ph.**	**kW**	**HP**	**1~**	**3~**	l/min	**0**	**5**	**10**	**15**	**20**	**25**	**30**	**40**	**50**	**60**	**70**	**80**	**90**	**100**	**110**	**120**	**130**
FCRm 80/2	**FCR 80/2**	0.30	0.40				27	26	25	24	22.5	21	20	16.5	13	9	5						
FCRm 80/3	**FCR 80/3**	0.45	0.60				40	38	37	36	34.5	33	31	27	22.5	17	11	5					
FCRm 80/4	**FCR 80/4**	0.55	0.75				52	50	49	47	44.5	42	40	34	28.5	22.5	16	10					
FCRm 80/5	**FCR 80/5**	0.75	1	**IE2**	**IE3**	**H** metres	67	66	64	62	59	56	53	45.5	37.5	29.5	20.5	12					
FCRm 100/3	**FCR 100/3**	0.55	0.75				38	37	36	35	34.5	33.5	33	31	28	26	23	20	17	13.5	10	5	
FCRm 100/4	**FCR 100/4**	0.75	1				50	50	49	48	47	46	45	42	39.5	37	34	30.5	26.5	22	17	11	5
FCRm 100/5	**FCR 100/5**	0.90	1.25				63	62	61.5	60.5	59.5	58	57	53.5	50.5	46.5	42.5	38	33	28	22	15	8

Q = Flow rate **H** = Total manometric head **HS** = Suction height

Performance curves comply with EN ISO 9906 Grade 3B tolerance limits.

ABSORPTION

TYPE	VOLTAGE
Single-phase	**230 V**
FCRm 80/2	2.1 A
FCRm 80/3	3.2 A
FCRm 80/4	3.9 A
FCRm 80/5	5.5 A
FCRm 100/3	3.9 A
FCRm 100/4	5.8 A
FCRm 100/5	6.8 A

TYPE	VOLTAGE	
Three-phase	**230 V - Δ**	**400 V - ⅄**
FCR 80/2	1.6 A	0.9 A
FCR 80/3	2.2 A	1.3 A
FCR 80/4	2.9 A	1.7 A
FCR 80/5	4.0 A	2.3 A
FCR 100/3	2.9 A	1.7 A
FCR 100/4	4.0 A	2.3 A
FCR 100/5	4.3 A	2.5 A

DIMENSIONS AND WEIGHT

WITH THREADED PORTS

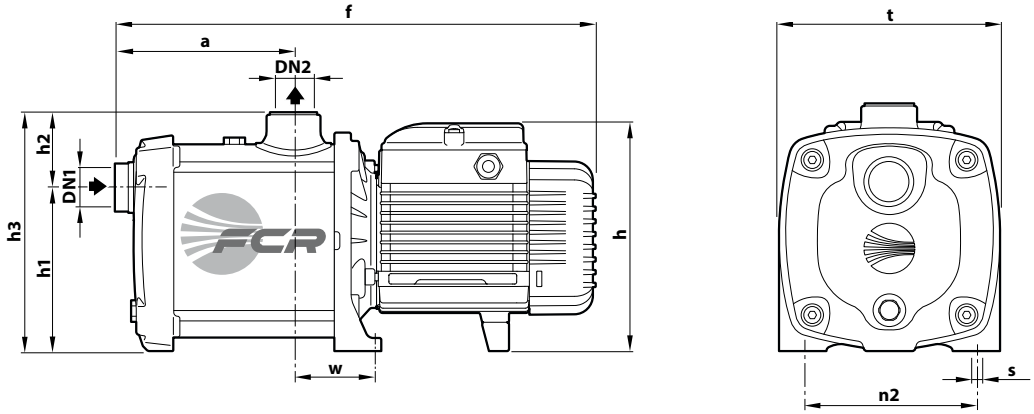

MODEL		PORTS		DIMENSIONS mm										kg	
Single-ph.	**Three-ph.**	**DN1**	**DN2**	a	f	h	h1	h2	h3	t	n2	w	s	1~	3~
FCRm 80/2	**FCR 80/2**			107	333	171								6.9	6.9
FCRm 80/3	**FCR 80/3**													7.9	7.9
FCRm 80/4	**FCR 80/4**			132	358									9.3	9.1
FCRm 80/5	**FCR 80/5**	**1"**	**1"**		377	189	122	56	178	160	125	56.5	9	11.8	11.8
FCRm 100/3	**FCR 100/3**			107	333	171								8.8	8.1
FCRm 100/4	**FCR 100/4**			132	377	189								11.6	11.6
FCRm 100/5	**FCR 100/5**													12.4	12.1

WITH FLANGED PORTS

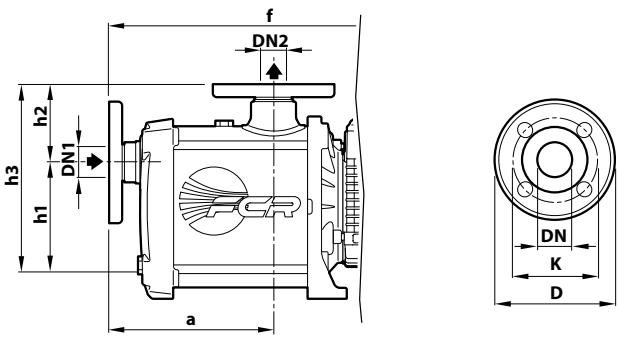

TYPE	PORTS		DIMENSIONS mm				
	DN1	DN2	a	f	h1	h2	h3
FCR 80/2			129	355			
FCR 80/3							
FCR 80/4			154	380			
FCR 80/5	**25**	**25**		399	122	78	200
FCR 100/3			129	355			
FCR 100/4			154	399			
FCR 100/5							

FLANGE	D	K	HOLES	
DN	mm	mm	N°	Ø (mm)
25	85	115	4	14
25	85	115	4	14

MATERIALS AND COMPONENTS

1	**Pump body**	Stainless steel **AISI 304**,provided with ISO 228/1 threaded ports
2	**Cover**	Stainless steel **AISI 304**
3	**Impellers**	Stainless steel **AISI 304**
4	**Diffusers**	Noryl™ complete with wear rings
5	**Mechanical seal**	

Seal	Shaft	Materials
AR-13	Ø 13 mm	Ceramic / Graphite / NBR

6	**Motor shaft**	Stainless steel **AISI 431**
7	**Electric motor**	**FCRm**: single-phase 230 V - 50 Hz with winding integrated thermal motor protection **FCR**: three-phase 230/400 V - 50 Hz ※ Pumps are equipped with high-efficiency motors (IEC 60034-30-1) class **IE2** for single-phase models class **IE3** for three-phase models Continuous running duty **S1**

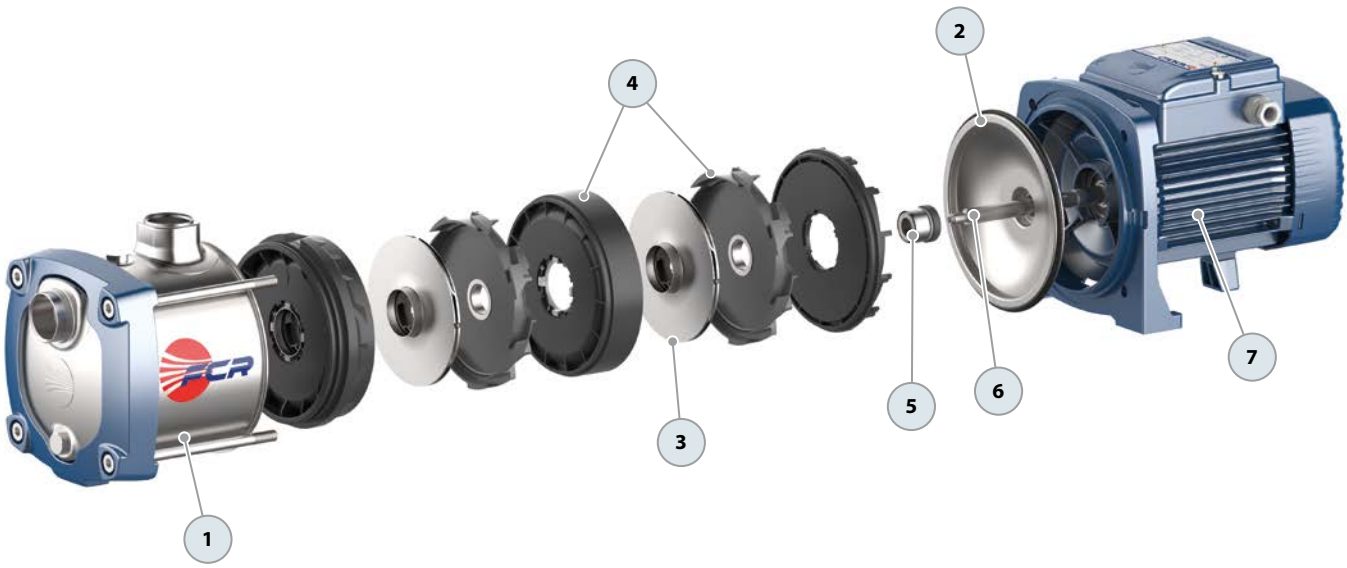

FCR Stainless steel multi-stage centrifugal pumps

Clean water

Domestic use

Civil use

※ Quiet, energy-efficient stainless steel multi-stage pumps

※ Pump body: **Stainless steel AISI 304**
※ Cover: **Stainless steel AISI 304**
※ Diffusers: **Stainless steel AISI 304**
※ Impellers: **Stainless steel AISI 304**
※ Shaft: **Stainless steel AISI 431**

PERFORMANCE RANGE

- Flow rate up to **240 l/min** (14.4 m³/h)
- Head up to **113 m**

INSTALLATION AND USE

Designed to transfer clean water free from abrasive particles and safe liquids that will not damage any of the pump's components. Highly reliable and quiet, they are suitable for domestic applications.

They work seamlessly with small to medium-sized pressure tanks, offering an ideal setup for all irrigation requirements.

ELECTRIC MOTOR

The three-phase pumps are equipped with newly developed electric motors designed to work with inverters, which guarantee stable and quiet operation.

Efficiency class **IE3** for three-phase motors and **IE2** for single-phase motors, with class F insulation and IPX4 protection.

KEY FEATURES

※ Stainless steel components extend service life and enhance efficiency.
※ Multi-stage design results in exceptionally quiet operation.

APPLICATION LIMITS

- Manometric suction head up to **7 m**
- Liquid temperature between **-10 °C** and **+90 °C**
- Ambient temperature up to **+40 °C**
- Maximum working pressure **11 bar**

AVAILABLE UPON REQUEST

※ Technopolymer impeller (cost-effective version)
※ Mechanical seal options available
※ Different voltage requirements 60 Hz frequency
※ IPX5 protection
※ Certified pumps WRAS APPROVED PRODUCT
※ ISO 228/1 standard flanges for suction and discharge openings, made of AISI 304 stainless steel

DN1 G 1¼"

DN2 G 1"

CURVES AND PERFORMANCE DATA – HS=0 m

50 Hz

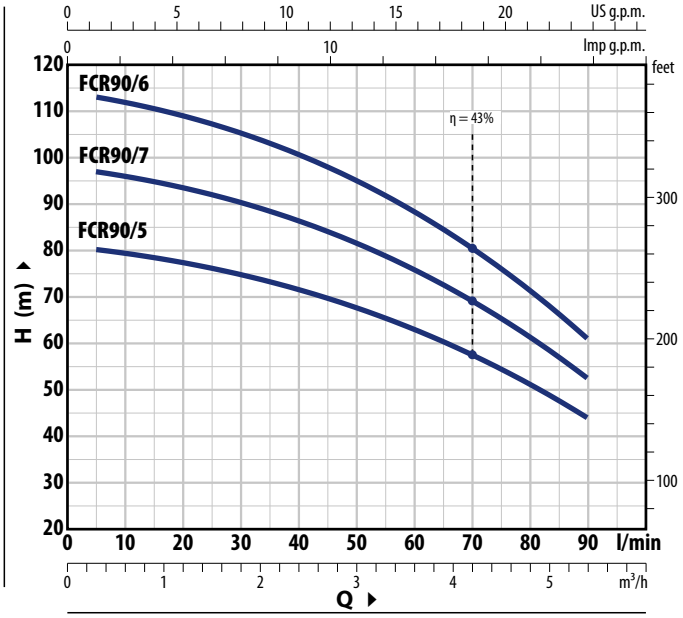

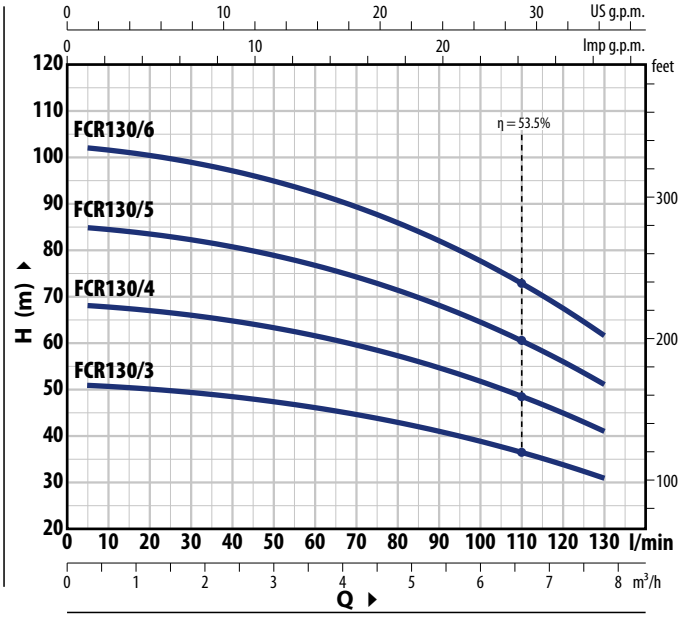

TYPE		POWER (P2)				Q m³/h	0	0.3	0.6	1.2	2.4	3.6	4.8	5.4	6.0	7.8
Single-ph.	**Three-ph.**	**kW**	**HP**	**1~**	**3~**	Q l/min	**0**	**5**	**10**	**20**	**40**	**60**	**80**	**90**	**100**	**130**
FCRm 90/5	**FCR 90/5**	1.1	1.5	IE2	IE3	H metres	81	80	79	77	71	62.5	51	44		
FCRm 90/6	**FCR 90/6**	1.5	2				97	96	95	93	86	75	61	52		
FCRm 90/7	**FCR 90/7**	1.8	2.5				113	112	111	108	100	88	71	61		
FCRm 130/3	**FCR 130/3**	1.1	1.5	IE2	IE3	H metres	51.5	51.5	51	50.5	49	46.5	43	41	39	31
FCRm 130/4	**FCR 130/4**	1.5	2				68.5	68.5	68	67	65	62	57.5	55	52	41
FCRm 130/5	**FCR 130/5**	1.8	2.5				86	85	85	84	81	77	72	68.5	65	51.5
FCRm 130/6	**FCR 130/6**	2.2	3				103	103	102	101	98	93	86	82	78	62

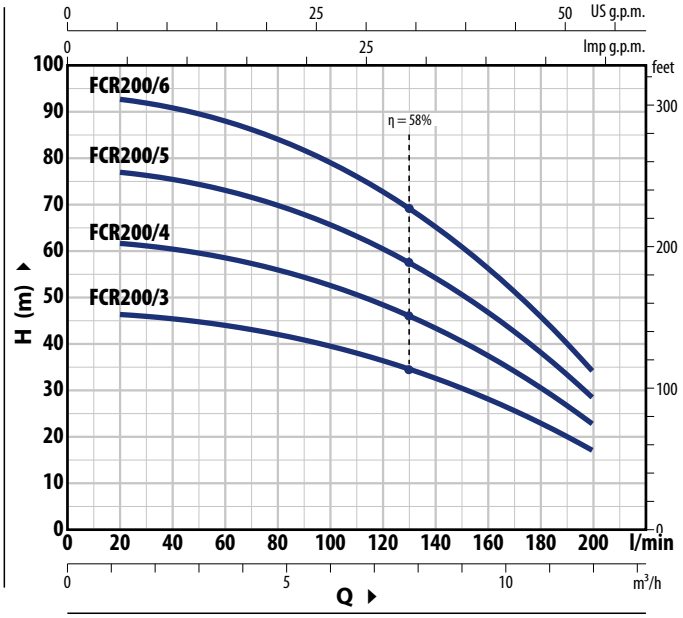

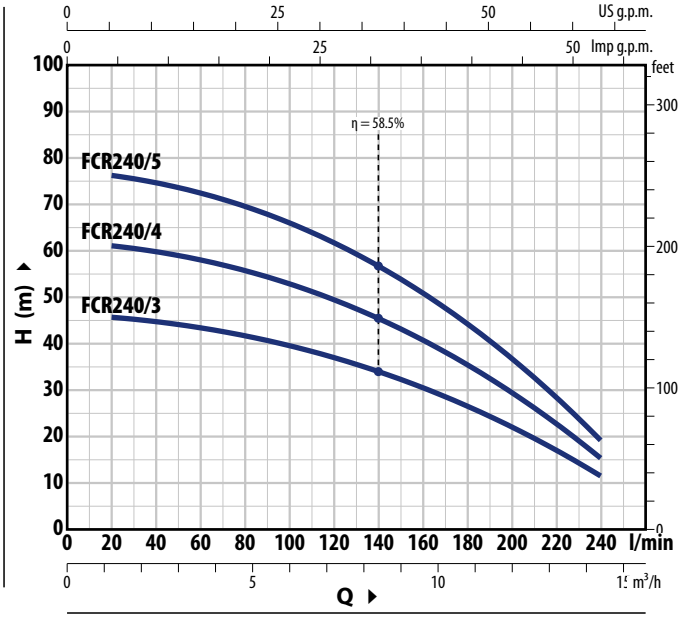

TIPO		POTENZA (P2)				Q m³/h	0	1.2	2.4	3.6	4.8	6.0	7.2	8.4	9.6	10.8	12.0	13.2	14.4
Monofase	**Trifase**	**kW**	**HP**	**1~**	**3~**	Q l/min	**0**	**20**	**40**	**60**	**80**	**100**	**120**	**140**	**160**	**180**	**200**	**220**	**240**
FCRm 200/3	**FCR 200/3**	1.1	1.5	IE2	IE3	H metres	47	46.5	45.5	44	42	39.5	36.5	32.5	28	23.1	17		
FCRm 200/4	**FCR 200/4**	1.5	2				62.5	62	60.5	58.5	56	53	48.5	43.5	37.5	31	23		
FCRm 200/5	**FCR 200/5**	1.8	2.5				78	77.5	76	73	70	66	61	54.5	47	38.5	28.5		
FCRm 200/6	**FCR 200/6**	2.2	3				94	93	91	88	84	79	73	65.5	56.5	46	34.5		
※ **FCRm 240/3**	**FCR 240/3**	1.5	2	IE2	IE3	H metres	46.5	46	45	43.5	42	39.5	37	34	30.5	26.6	22	17	11.5
※ **FCRm 240/4**	**FCR 240/4**	1.8	2.5				62	61	60	58	55.5	53	49.5	45.5	41	35.5	29.5	22.8	15.5
※ **FCRm 240/5**	**FCR 240/5**	2.2	3				77	76.5	75	73	69.5	66	62	57	51	44.5	37	28.5	19

Q = Portata **H** = Prevalenza manometrica totale **HS** = Altezza di aspirazione

Tolleranza delle curve di prestazione secondo EN ISO 9906 Grado 3B.

※ **Start of production 04.2024** ※

ABSORPTION

TYPE	VOLTAGE
Single-phase	**230 V**
FCRm 90/5	9.0 A
FCRm 90/6	10.5 A
FCRm 90/7	12.5 A
FCRm 130/3	8.5 A
FCRm 130/4	10.3 A
FCRm 130/5	12.5 A
FCRm 130/6	13.5 A
FCRm 200/3	8.7 A
FCRm 200/4	10.5 A
FCRm 200/5	12.5 A
FCRm 200/6	14.0 A
FCRm 240/3	8.5 A
FCRm 240/4	10.5 A
FCRm 240/5	12.5 A

TYPE	VOLTAGE	
Three-phase	**230 V - Δ**	**400 V - ⅄**
FCR 90/5	6.1 A	3.5 A
FCR 90/6	6.9 A	4.0 A
FCR 90/7	8.3 A	4.8 A
FCR 130/3	5.5 A	3.2 A
FCR 130/4	6.9 A	4.0 A
FCR 130/5	8.6 A	5.0 A
FCR 130/6	9.0 A	5.2 A
FCR 200/3	5.9 A	3.4 A
FCR 200/4	7.3 A	4.2 A
FCR 200/5	8.6 A	5.0 A
FCR 200/6	9.5 A	5.5 A
FCR 240/3	5.7 A	3.3 A
FCR 240/4	7.6 A	4.4 A
FCR 240/5	8.6 A	5.0 A

DIMENSIONS AND WEIGHT

※ WITH THREADED PORTS

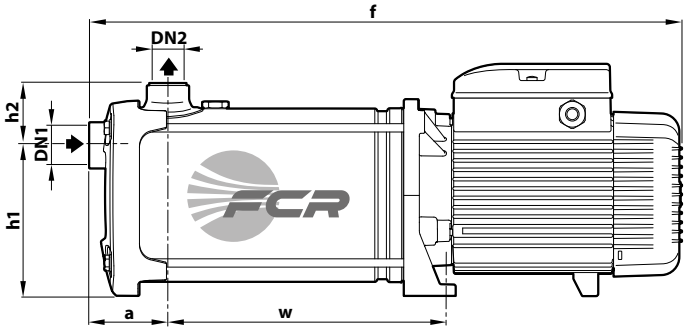

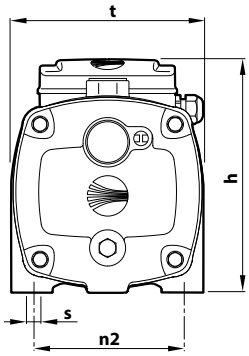

TYPE		PORTS		DIMENSIONS mm									kg	
Single-phase	**Three-phase**	**DN1**	**DN2**	a	f	h	h1	h2	t	n2	w	s	1~	3~
FCRm 90/5	**FCR 90/5**				492						191		20.0	20.0
FCRm 90/6	**FCR 90/6**				518						217		22.0	22.0
FCRm 90/7	**FCR 90/7**				564						243		25.7	25.7
FCRm 130/3	**FCR 130/3**				440						139		18.0	18.0
FCRm 130/4	**FCR 130/4**				466						165		20.2	20.2
FCRm 130/5	**FCR 130/5**				512						191		23.7	23.7
FCRm 130/6	**FCR 130/6**				538						217		24.7	24.7
FCRm 200/3	**FCR 200/3**	**1¼"**	**1"**	75	440	228	145	59	185	145	139	11	18.0	18.0
FCRm 200/4	**FCR 200/4**				466						165		20.2	20.2
FCRm 200/5	**FCR 200/5**				512						191		23.7	23.7
FCRm 200/6	**FCR 200/6**				538						217		24.7	24.7
FCRm 240/3	**FCR 240/3**				440						139		19.2	19.2
FCRm 240/4	**FCR 240/4**				486						165		22.7	22.7
FCRm 240/5	**FCR 240/5**				512						191		23.7	23.7

※ WITH FLANGED PORTS

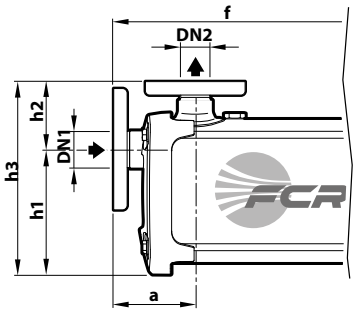

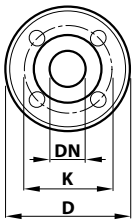

TYPE	PORTS		DIMENSIONS mm				
	DN1	DN2	a	f	h1	h2	h3
FCR 90/5				515			
FCR 90/6				541			
FCR 90/7				587			
FCR 130/3				463			
FCR 130/4				489			
FCR 130/5				535			
FCR 130/6	**25**	**32**	97.5	561	145	82	227
FCR 200/3				463			
FCR 200/4				489			
FCR 200/5				535			
FCR 200/6				561			
FCR 240/3				463			
FCR 240/4				509			
FCR 240/5				535			

FLANGES **DN**	D (mm)	K (mm)	N° HOLES	Ø (mm)
25	85	115	4	14
32	100	140	4	18

MATERIALS AND COMPONENTS

1	**Pump body**	Stainless steel **AISI 304** with ISO 228/1 threaded ports
2	**Cover**	Stainless steel **AISI 304**
3	**Impellers**	Stainless steel **AISI 304**
4	**Diffusers**	Stainless steel **AISI 304**
5	**Mechanical seal**	

Seal	Shaft	Materials
FN-18	Ø 18 mm	Graphite / Ceramic / NBR

6	**Motor shaft**	Stainless steel **AISI 431**
7	**Electric motor**	**FCRm**: single-phase 230 V - 50 Hz with winding integrated thermal motor protection **FCR**: three-phase 230/400 V - 50 Hz ※ Pumps are equipped with high-efficiency motors (IEC 60034-30-1) class **IE2** for single-phase models class **IE3** for three-phase modelss Continuous running duty **S1**

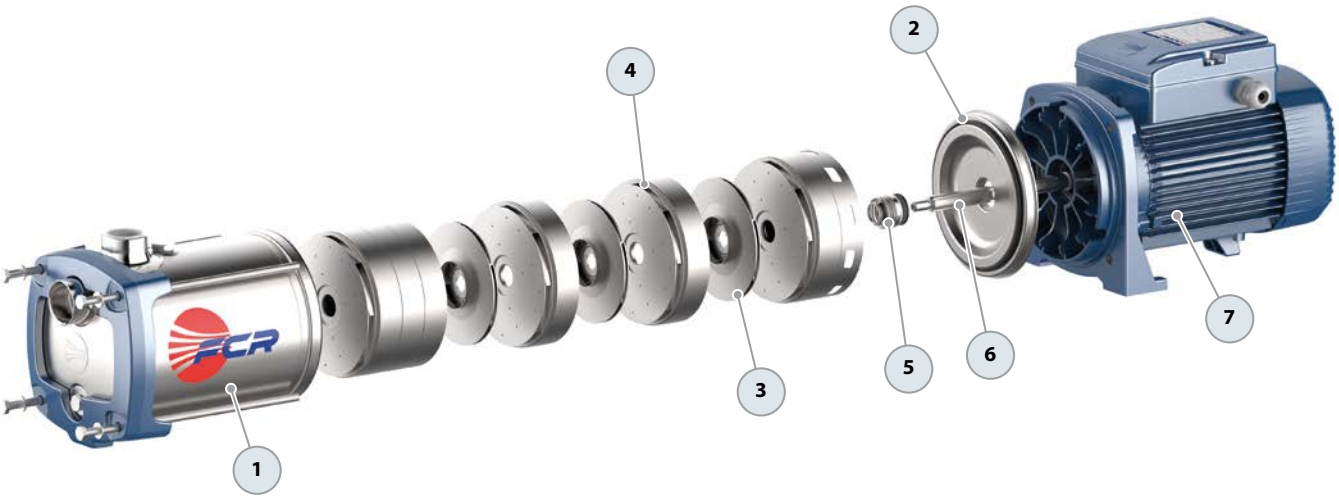

FCR Stainless steel multi-stage centrifugal pumps

Clean water
Civil use
Industrial use

※ Low noise, low energy stainless steel multi-stage pumps

※ Pump body: **Stainless steel AISI 304**
※ Cover: **Stainless steel AISI 304**
※ Diffusers: **Stainless steel AISI304**
※ Impellers: **Stainless steel AISI 304**
※ Shaft: **Stainless steel AISI 431**

PERFORMANCE RANGE

- Flow rate up to **800 l/min** (48 m³/h)
- Head up to **120 m**

INSTALLATION AND USE

Due to their silent operation and energy efficiency, these pumps are ideal for water supply and pressurization, water distribution in conjunction with autoclaves, industrial uses, and irrigation systems.

ELECTRIC MOTOR

The three-phase pumps are equipped with newly developed electric motors designed to work with inverters, which guarantee stable and quiet operation.

Efficiency class **IE3**, class F insulation and IP55 protection.

KEY FEATURES

※ Stainless steel components extend service life and enhance efficiency.
※ Multi-stage design results in exceptionally quiet operation.

APPLICATION LIMITS

- Manometric suction head up to **7 m**
- Liquid temperature between **-15 °C** and **+90 °C**
- Ambient temperature up to **+40 °C**
- Maximum working pressure **12 bar**

AVAILABLE UPON REQUEST

※ AISI 316 stainless steel pump.
※ Handling of liquids with higher or lower temperatures.
※ Different voltage requirements 60 Hz frequency
※ **WRAS-certified** pumps
※ ISO 228/1 standard flanges for suction and discharge openings, made of AISI 304 stainless steel.

CURVES AND PERFORMANCE DATA – HS=0 m

50 Hz

FCR 15

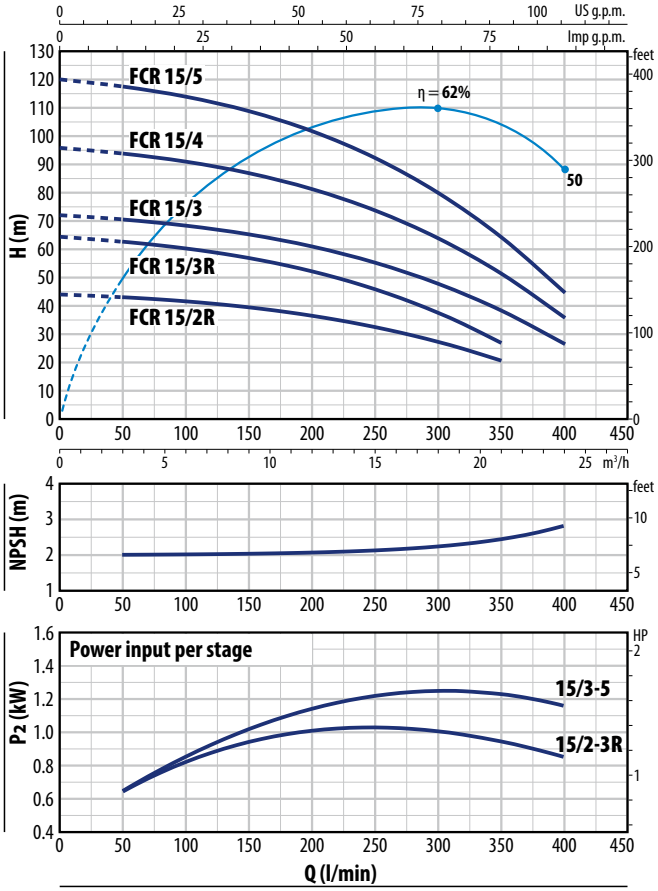

FCR 30

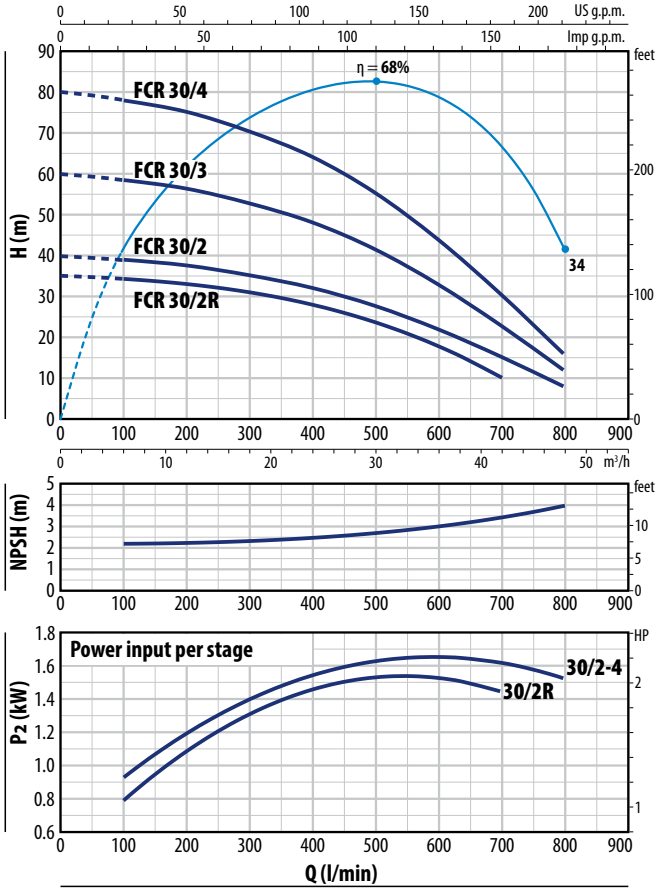

FCR 15

TYPE	POWER (P2)			Q m³/h	0	3	6	12	18	21	24
Three-phase	kW	HP	3~	l/min	**0**	**50**	**100**	**200**	**300**	**350**	**400**
FCR 15/2R	2.2	3	IE3	H metres	44	43	41.5	36.5	27.5	20.5	
FCR 15/3R	3	4			64.5	62.5	60.5	52.0	37.5	27	
FCR 15/3	4	5.5			72	70	68.5	61	48	38.5	27
FCR 15/4	5.5	7.5			96	94	91	81	64	51.5	36
FCR 15/5	7.5	10			120	117	114	102	80	64.5	45

FCR 30

TYPE	POWER (P2)			Q m³/h	0	6	12	18	24	36	42	48
Three-phase	kW	HP	3~	l/min	**0**	**100**	**200**	**300**	**400**	**600**	**700**	**800**
FCR 30/2R	3	4	IE3	H metres	35	34	33	31	28	17.6	10	
FCR 30/2	4	5.5			40	39	37.5	35	31.5	22	15.7	8
FCR 30/3	5.5	7.5			60	58.5	56	52.5	47.5	33	23.5	12
FCR 30/4	7.5	10			80	78	75	70	63	44	31.3	16

Q = Flow rate **H** = Total manometric head **HS** = Suction height

Performance curves comply with EN ISO 9906 Grade 3B tolerance limits.

ABSORPTION

TYPE	VOLTAGE			
Three-ph.	**230 V - Δ**	**400 V - ⅄**	**400 V - Δ**	**690 V - ⅄**
FCR 15/2R	10.4 A	6.0 A	–	–
FCR 15/3R	12.5 A	7.2 A	–	–
FCR 15/3	15.2 A	8.8 A	–	–
FCR 15/4	–	–	11.2 A	6.5 A
FCR 15/5	–	–	14.2 A	8.2 A

TYPE	VOLTAGE			
Three-ph.	**230 V - Δ**	**400 V - ⅄**	**400 V - Δ**	**690 V - ⅄**
FCR 30/2R	12.1 A	7.0 A	–	–
FCR 30/2	15.2 A	8.8 A	–	–
FCR 30/3	–	–	11.2 A	6.5 A
FCR 30/4	–	–	14.1 A	8.2 A

DIMENSIONS AND WEIGHT

※ WITH THREADED PORTS

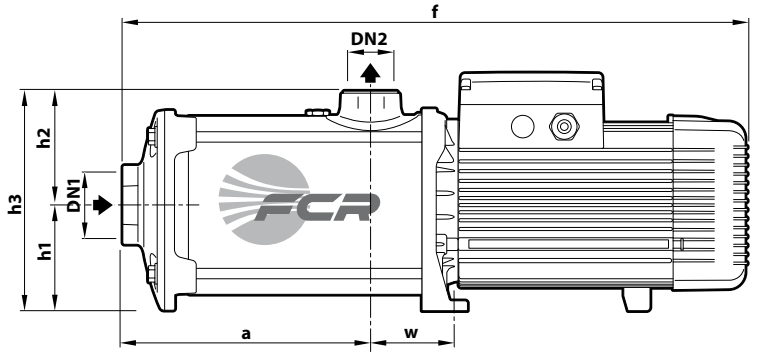

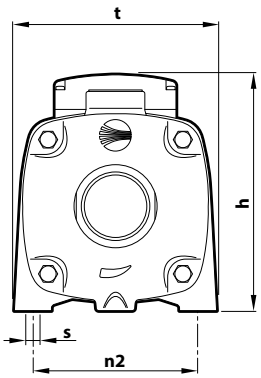

TYPE	PORTS		N°	DIMENSIONS mm										kg
Three-phase	**DN1**	**DN2**	STAGES	a	f	h	h1	h2	h3	t	n2	w	s	3~
FCR 15/2R			2	155	533									34.0
FCR 15/3R			3	199	577									40.0
FCR 15/3			3			271	120	132	252	234	190	96	12	40.0
FCR 15/4			4	243	621									46.0
FCR 15/5	**2½"**	**2"**	5	287	715									57.0
FCR 30/2R			2	155	533									37.0
FCR 30/2			2			271	120	132	252	234	190	96	12	37.0
FCR 30/3			3	199	577									44.0
FCR 30/4			4	243	671									54.0

※ WITH FLANGED PORTS

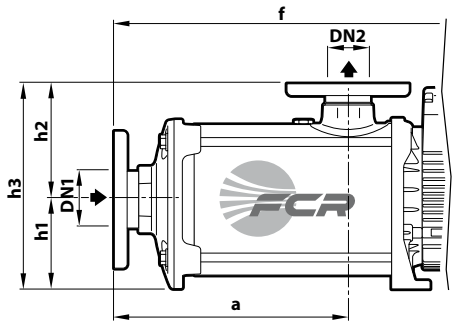

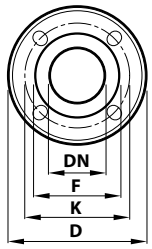

TYPE	PORTS		DIMENSIONS mm				
Three-phase	DN1	DN2	a	f	h1	h2	h3
FCR 15/2R			189	566			
FCR 15/3R			233	610			
FCR 15/3					120	165	285
FCR 15/4			277	654			
FCR 15/5	**65**	**50**	320	748			
FCR 30/2R			189	566			
FCR 30/2					120	165	285
FCR 30/3			233	610			
FCR 30/4			276	704			

FLANGE	D	K	F	HOLES	
DN	mm	mm	mm	N°	Ø (mm)
50	165	125	99	4	18
65	185	145	118	4	18

MATERIALS AND COMPONENTS

1	**Pump body**	Stainless steel **AISI 304**,provided with ISO 228/1 threaded ports
2	**Cover**	Stainless steel **AISI 304**
3	**Impellers**	Stainless steel **AISI 304**
4	**Diffusers**	Stainless steel **AISI 304**
5	**Mechanical seal**	

Seal	Shaft	Materials
FN-KU-24 ISO 3069 EN 12756	Ø 24 mm	Graphite / Ceramic / NBR

6	**Pump shaft**	Stainless steel **AISI 316L**
7	**Electric motor**	**Three-phase** 230/400 V - 50 Hz up to 4 kW 400/690 V - 50 Hz 5.5 to 7.5 kW ※ The pumps are equipped with high-efficiency motors (IEC 60034-30-1) class **IE3** Continuous running duty **S1**

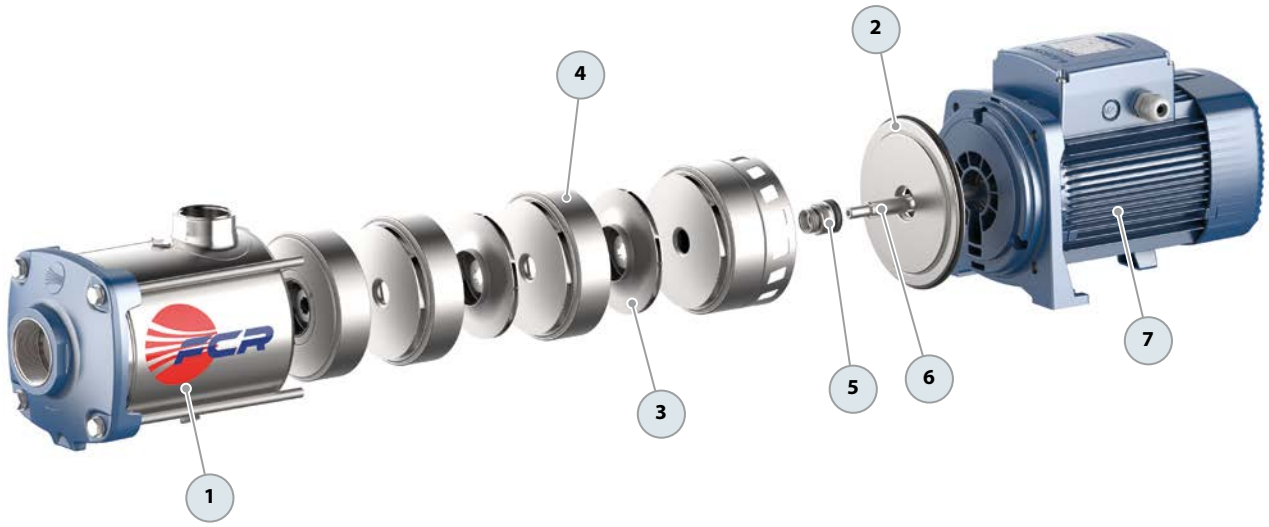

MK Multi-stage centrifugal pumps

Clean water
Domestic use
Civil use
Agricultural use

PERFORMANCE RANGE

- Flow rate up to **180 l/min** (10.8 m³/h)
- Head up to **114 m**

INSTALLATION AND USE

Compact and cost-effective vertical multistage centrifugal pumps suitable for water supply, clean liquids, and pressurization in domestic, civil, and agricultural systems, as well as irrigation.

ELECTRIC MOTOR

The three-phase pumps are equipped with newly developed electric motors designed to work with inverters, which guarantee stable and quiet operation.

Efficiency class **IE3** for three-phase motors and **IE2** for single-phase motors, with class F insulation and IPX4 protection.

APPLICATION LIMITS

- Manometric suction head up to **7 m**
- Liquid temperature between **-10 °C** and **+60 °C**
- Ambient temperature up to **+40 °C**
- Maximum working pressure **11 bar**

AVAILABLE UPON REQUEST

※ Different voltage requirements 60 Hz frequency

CURVES AND PERFORMANCE DATA – HS=0 m

50 Hz

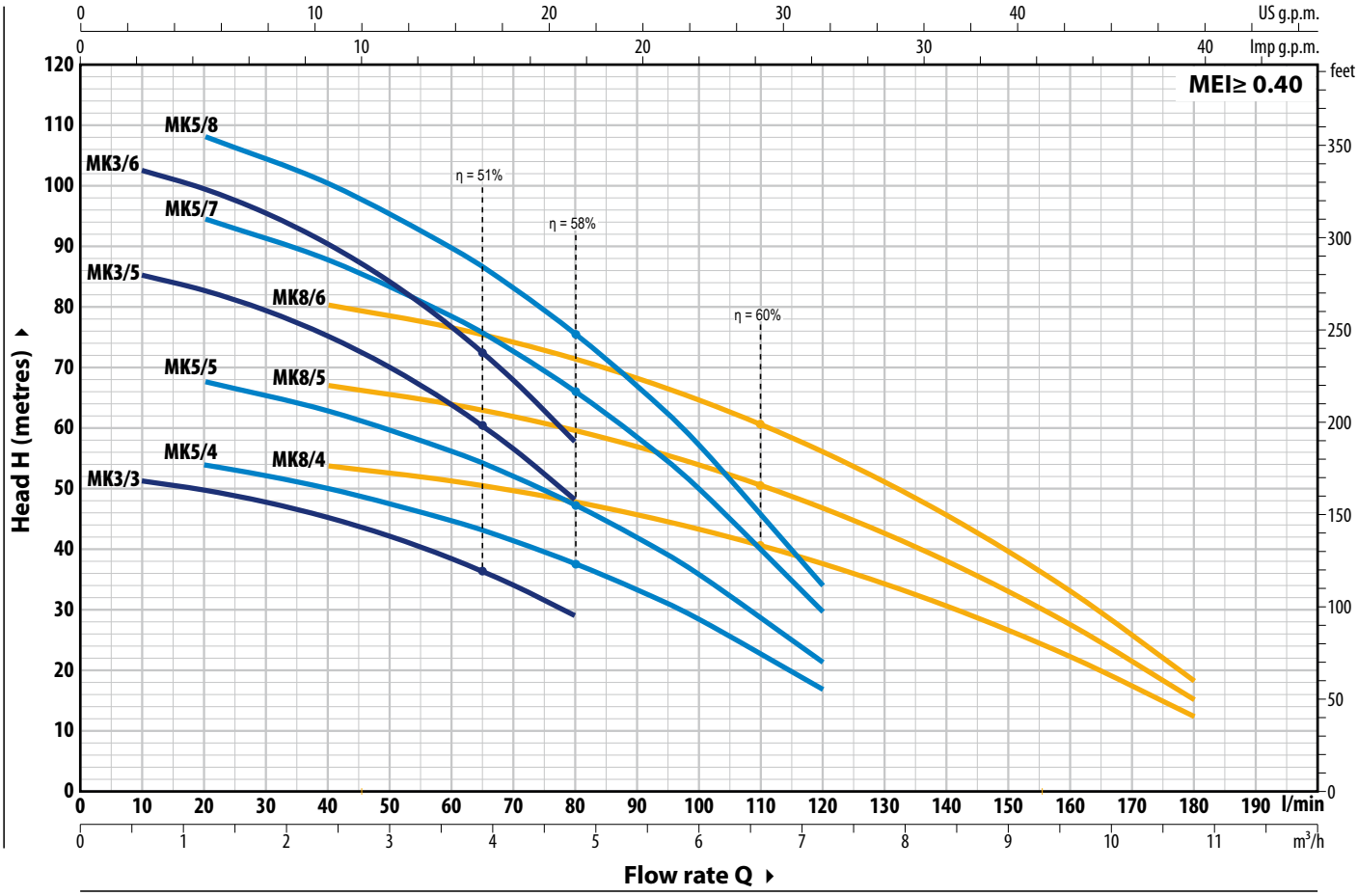

TYPE		POWER (P2)				Q m³/h	0	0.6	1.2	2.4	3.6	4.8	6.0	7.2	8.4	9.6	10.8
Single-ph.	**Three-ph.**	**kW**	**HP**	**1~**	**3~**	Q l/min	**0**	**10**	**20**	**40**	**60**	**80**	**100**	**120**	**140**	**160**	**180**
MKm 3/3	**MK 3/3**	0.75	1				52.5	51.5	50	45	38.5	29					
MKm 3/5	**MK 3/5**	1.1	1.5				87	85	83	75	64	48					
MKm 3/6	**MK 3/6**	1.5	2				105	103	100	90	77	58					
MKm 5/4	**MK 5/4**	0.75	1				57	–	54	50	45	37.5	28.5	17			
MKm 5/5	**MK 5/5**	1.1	1.5				71	–	67.5	62.5	56	47	35.5	21.5			
MKm 5/7	**MK 5/7**	1.5	2	**IE2**	**IE3**	**H** metres	99	–	95	88	78	66	50	30			
MKm 5/8	**MK 5/8**	2.2	3				114	–	108	100	90	75	57	34			
MKm 8/4	**MK 8/4**	1.1	1.5				56	–	–	53.5	51	47.5	43	37.5	30.5	22.1	12
MKm 8/5	**MK 8/5**	1.5	2				70	–	–	67	64	59.5	54	47	38	27.5	15.5
MKm 8/6	**MK 8/6**	2.2	3				84	–	–	80	77	72	64.5	56	45.5	33	18.5

Q = Flow rate **H** = Total manometric head **HS** = Suction height

Performance curves comply with EN ISO 9906 Grade 3B tolerance limits.

ABSORPTION

TYPE	VOLTAGE
Single-ph.	**230 V**
MKm 3/3	5.7 A
MKm 3/5	7.8 A
MKm 3/6	9.5 A
MKm 5/4	5.7 A
MKm 5/5	7.1 A
MKm 5/7	9.3 A
MKm 5/8	10.0 A
MKm 8/4	7.8 A
MKm 8/5	9.7 A
MKm 8/6	11.1 A

TYPE	VOLTAGE	
Three-ph.	**230 V - Δ**	**400 V - ⅄**
MK 3/3	4.2 A	2.4 A
MK 3/5	5.2 A	3.0 A
MK 3/6	6.1 A	3.5 A
MK 5/4	4.3 A	2.5 A
MK 5/5	4.7 A	2.7 A
MK 5/7	6.1 A	3.5 A
MK 5/8	7.4 A	4.3 A
MK 8/4	5.2 A	3.0 A
MK 8/5	6.1 A	3.5 A
MK 8/6	7.8 A	4.5 A

DIMENSIONS AND WEIGHT

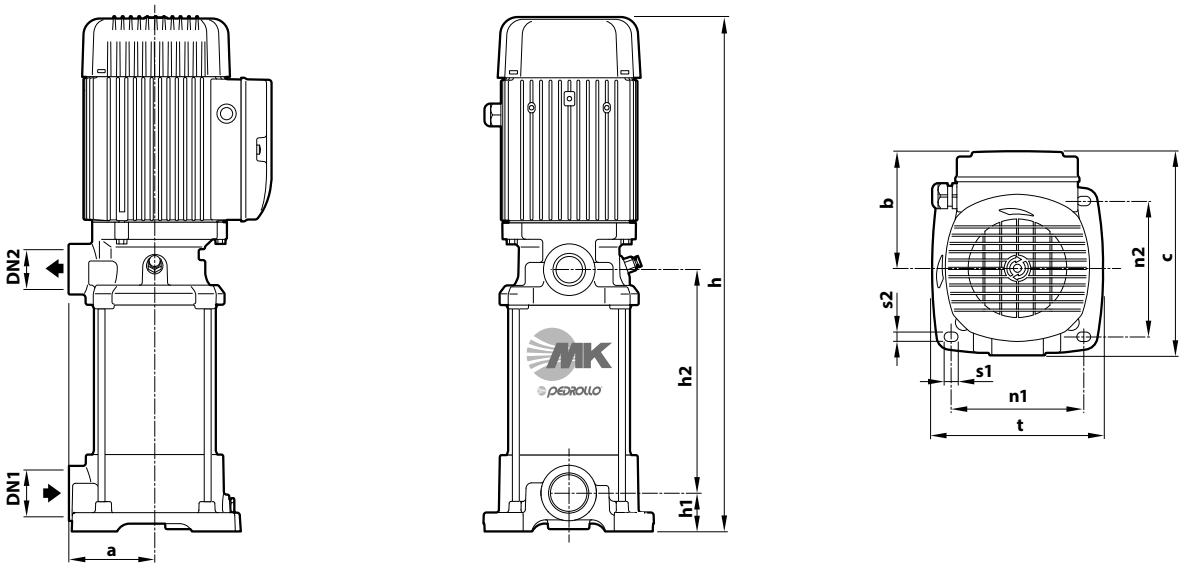

TYPE		PORTS		DIMENSIONS mm											kg	
Single-ph.	**Three-ph.**	**DN1**	**DN2**	a	h	h1	h2	n1	n2	t	b	c	s1	s2	1~	3~
MKm 3/3	**MK 3/3**				447		132.5								21.3	20.0
MKm 3/5	**MK 3/5**				501		186.5								22.2	22.2
MKm 3/6	**MK 3/6**				528		213.5								24.0	24.0
MKm 5/4	**MK 5/4**				474		159.5								21.8	20.5
MKm 5/5	**MK 5/5**	**1¼"**	**1"**	93	501	41.5	186.5	143	146	185	127	220	14.5	10	21.9	22.0
MKm 5/7	**MK 5/7**				555		240.5								24.6	24.2
MKm 5/8	**MK 5/8**				602		267.5								25.5	24.5
MKm 8/4	**MK 8/4**				474		159.5								22.7	22.7
MKm 8/5	**MK 8/5**				501		186.5								23.4	23.0
MKm 8/6	**MK 8/6**				548		213.5								27.1	26.1

MATERIALS AND COMPONENTS

1	**Suction body**	Cast iron with cataphoresis treatment, provided with ISO 228/1 threaded suction port
2	**External sleeve**	Stainless steel **AISI 304**
3	**Delivery port**	Cast iron with cataphoresis treatment, provided with ISO 228/1 threaded delivery port
4	**Impellers and diffusers**	Noryl™
5	**Diaphragms.**	**AISI 304** stainless steel complete with wear rings

6 Mechanical seal

Seal	Shaft	Materials
FN-18	Ø 18 mm	Graphite / Ceramic / NBR

7	**Motor shaft**	Stainless steel **AISI 431**

8 Electric motor

MKm: single-phase 230 V - 50 Hz with capacitor and winding integrated thermal motor protection

MK: three-phase 230/400 V - 50 Hz

※ Pumps are equipped with high-efficiency motors (IEC 60034-30-1)
class **IE2** for single-phase models
class **IE3** for three-phase models

Continuous running duty **S1**

HT Multi-stage centrifugal pumps

Clean water
Civil use
Agricultural use
Industrial use

※ **HT pumps are designed for high hydraulic performance featuring a robust, compact, and reliable mechanical construction..**

※ Jacket **Stainless steel AISI 304**
※ Impellers: **Stainless steel AISI 304**
※ Diffusers: **Stainless steel AISI 304**
※ Shaft **Stainless steel AISI 431**

PERFORMANCE RANGE

- Flow rate up to **800 l/min** (48 m³/h)
- Head up to **160 m**

INSTALLATION AND USE

Designed to transfer clean water free from abrasive particles and liquids that will not damage the pump's components. Their high efficiency and adaptability to a wide variety of applications make them an ideal choice in the domestic, civil, agricultural, and industrial sectors, particularly for water distribution along pressure tanks to increase overall network pressure. Suggested uses include fire-fighting systems, heavy-duty cleaning applications, industrial power washers, and irrigation.

KEY FEATURES

※ **Stainless steel components** extend service life and enhance efficiency.
※ Multi-stage design results in exceptionally quiet operation

ELECTRIC MOTOR

The three-phase pumps are equipped with newly developed electric motors designed to work with inverters, which guarantee stable and quiet operation.

Efficiency class **IE3** for three-phase motors and **IE2** for single-phase motors, with class F insulation and IPX4 protection.

APPLICATION LIMITS

- Manometric suction head up to **7 m**
- Liquid temperature between **-15 °C** and **+90 °C**
- Ambient temperature up to **+40 °C**
- Maximum working pressure **16 bar**

AVAILABLE UPON REQUEST

※ Handling of liquids with higher or lower temperatures.
※ Pump body with NPT threaded ports ANSI B 1.20.1
※ COUNTER-FLANGE
※ Pump protection kit to prevent dry running
※ O-rings in EPDM or VITON (standard version in NBR)
※ Different voltage requirements 60 Hz frequency

CURVES AND PERFORMANCE DATA – HS=0 m

50 Hz

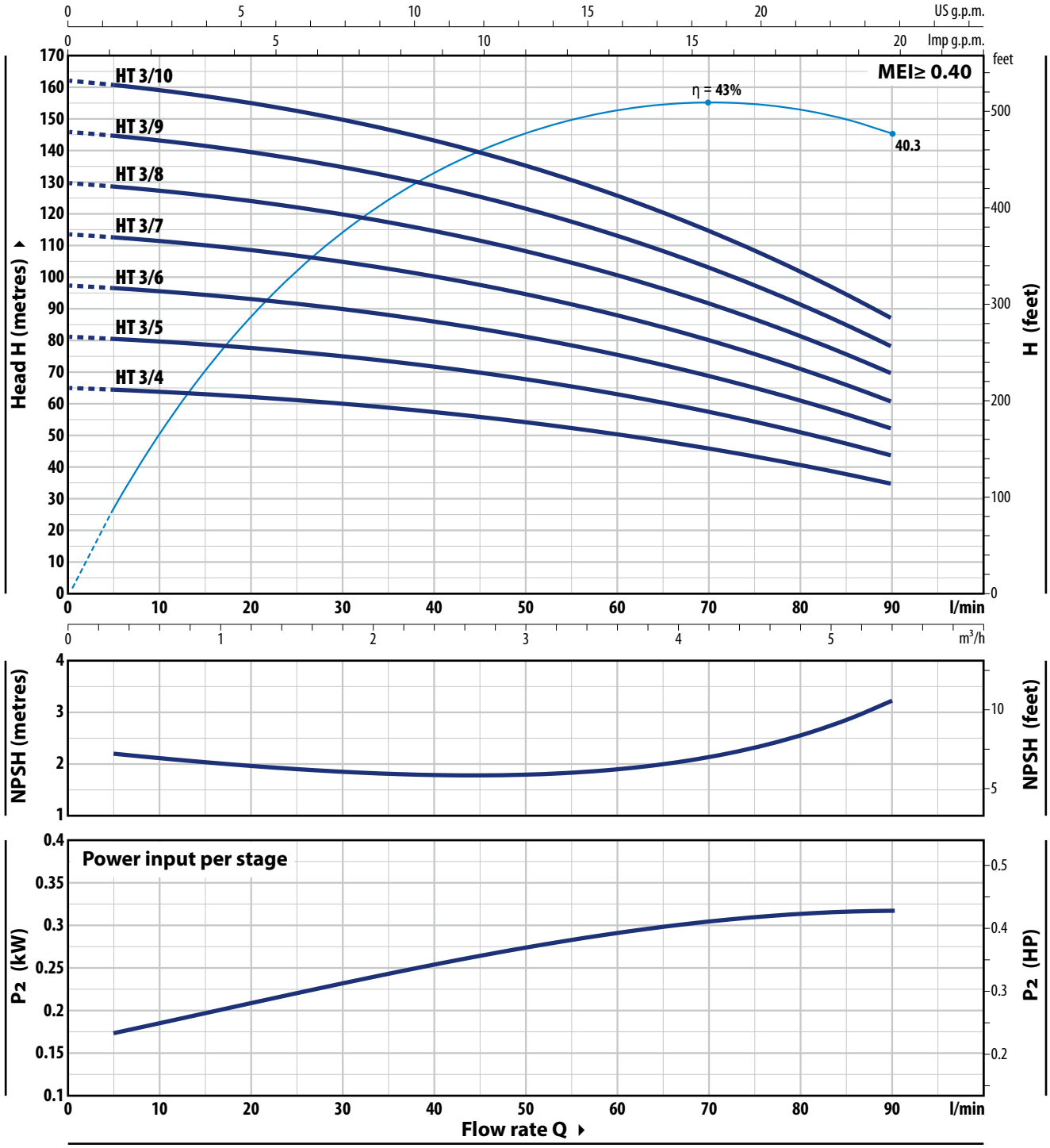

TYPE		POWER (P2)				Q m³/h	0	0.3	0.6	1.2	2.4	3.6	4.8	5.4
Single-phase	**Three-phase**	**kW**	**HP**	**1~**	**3~**	l/min	**0**	**5**	**10**	**20**	**40**	**60**	**80**	**90**
HTm 3/4	**HT 3/4**	0.75	1				65	65	63.5	62	57	50	40.5	35
HTm 3/5	**HT 3/5**	1.1	1.5				81	80	79	77	71	62.5	51	44
HTm 3/6	**HT 3/6**	1.5	2				97	96	95	93	86	75	61	52
HTm 3/7	**HT 3/7**	1.8	2.5	**IE2**	**IE3**	**H** metres	113	112	111	108	100	88	71	61
※ –	**HT 3/8**	2.2	3				129	128	127	124	114	100	81	69.5
※ –	**HT 3/9**	3	4				146	144	143	139	129	113	91	78
※ –	**HT 3/10**	3	4				–	160	159	155	143	125	102	87

Q = Flow rate **H** = Total manometric head **HS** = Suction height

Performance curves comply with EN ISO 9906 Grade 3B tolerance limits.

CURVES AND PERFORMANCE DATA – HS=0 m

50 Hz

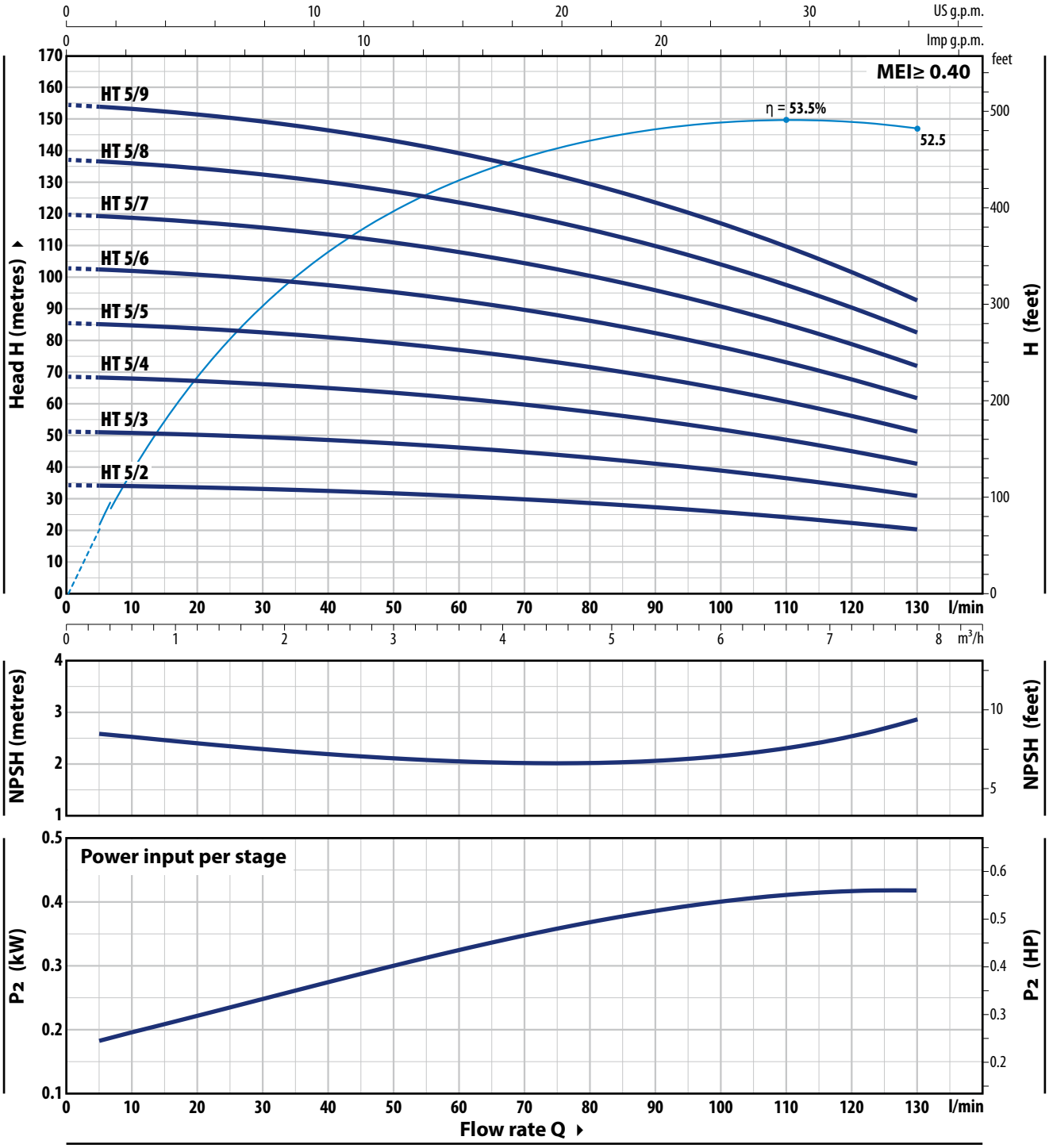

TYPE		POWER (P2)				Q m³/h	0	0.3	0.6	1.2	2.4	3.6	4.8	5.4	6	7.8
Single-phase	Three-phase	kW	HP	1~	3~	l/min	**0**	**5**	**10**	**20**	**40**	**60**	**80**	**90**	**100**	**130**
HTm 5/2	HT 5/2	0.75	1	IE2	IE3	H metres	35	35	32.7	32.3	32.5	31	25.5	27.5	26	20.5
HTm 5/3	HT 5/3	1.1	1.5				51.5	51.5	51	50.5	49	46.5	43	41	39	31
HTm 5/4	HT 5/4	1.5	2				68.5	68.5	68	67	65	62	57.5	55	52	41
HTm 5/5	HT 5/5	1.8	2.5				86	85	85	84	81	77	72	68.5	65	51.5
HTm 5/6	HT 5/6	2.2	3				103	103	102	101	98	93	86	82	78	62
※ –	HT 5/7	3	4				120	120	119	118	114	108	101	96	91	72
※ –	HT 5/8	3	4				137	137	136	134	130	124	115	110	104	82
※ –	HT 5/9	4	5.5				154	154	153	151	146	139	129	124	117	93

Q = Flow rate **H** = Total manometric head **HS** = Suction height

Performance curves comply with EN ISO 9906 Grade 3B tolerance limits.

 ※ **Start of production 04.2024** ※

CURVES AND PERFORMANCE DATA – HS=0 m

50 Hz

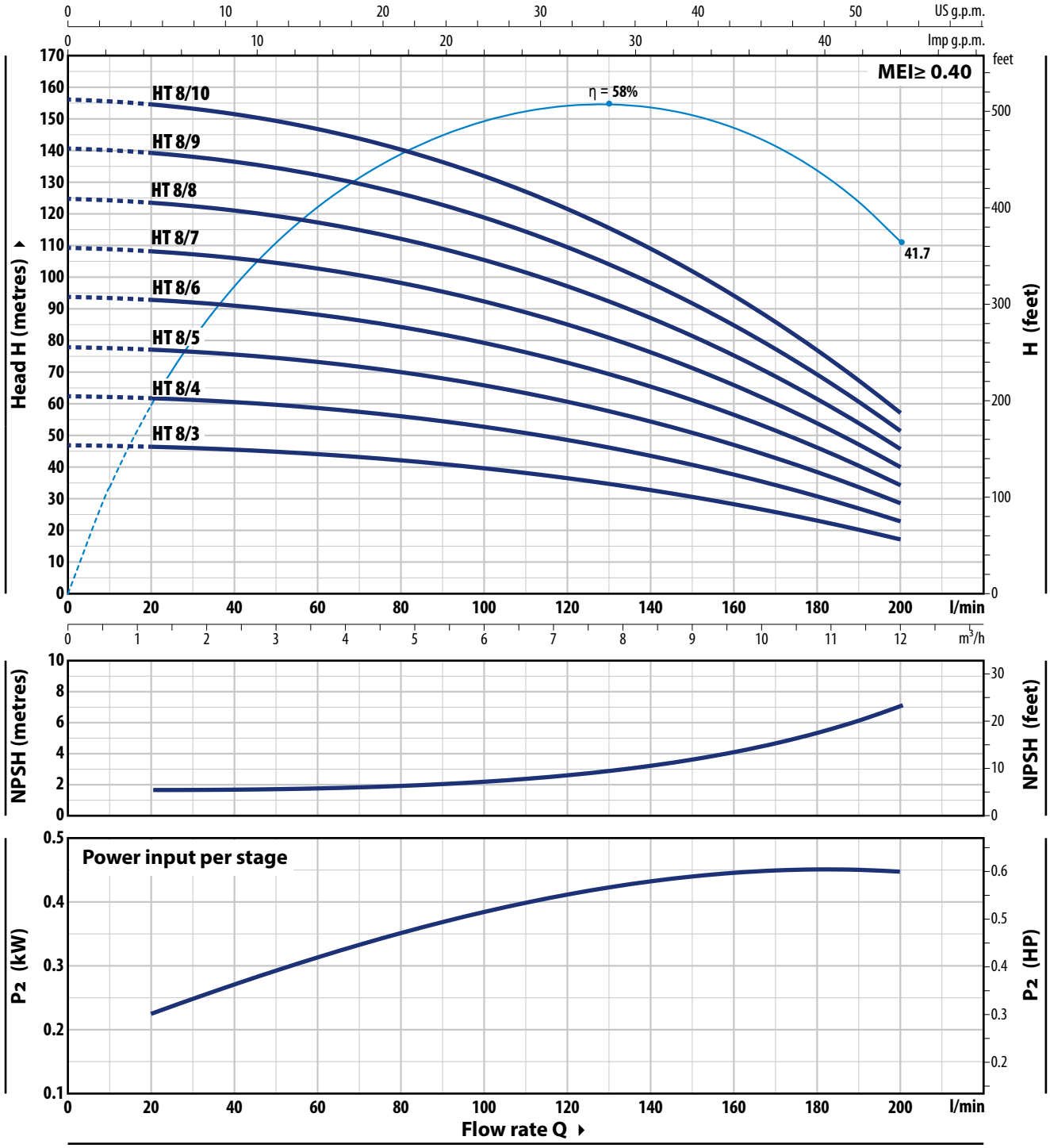

TYPE		POWER (P2)				Q	m³/h	0	1.2	2.4	3.6	4.8	6.0	7.2	8.4	9.6	10.8	12.0
Single-phase	**Three-phase**	**kW**	**HP**	**1~**	**3~**		l/min	**0**	**20**	**40**	**60**	**80**	**100**	**120**	**140**	**160**	**180**	**200**
HTm 8/3	**HT 8/3**	1.1	1.5					47	46.5	45.5	44	42	39.5	36.5	32.5	28	23.1	17
HTm 8/4	**HT 8/4**	1.5	2					62.5	62	60.5	58.5	56	53	48.5	43.5	37.5	31	23
HTm 8/5	**HT 8/5**	1.8	2.5					78	77.5	76	73	70	66	61	54.5	47	38.5	28.5
HTm 8/6	**HT 8/6**	2.2	3					94	93	91	88	84	79	73	65.5	56.5	46	34.5
※ –	**HT 8/7**	3	4	**IE2**	**IE3**	**H** metres		109	108	106	103	98	92	85	76	66	54	40
※ –	**HT 8/8**	4	5.5					125	124	121	117	112	106	97	87	75	61.5	45.5
※ –	**HT 8/9**	4	5.5					141	139	136	132	126	119	109	98	85	69	51.5
※ –	**HT 8/10**	5.5	7.5					156	155	152	147	140	132	122	109	94	77	57

Q = Flow rate **H** = Total manometric head **HS** = Suction height

Performance curves comply with EN ISO 9906 Grade 3B tolerance limits.

HT 10

CURVES AND PERFORMANCE DATA – HS=0 m

50 Hz

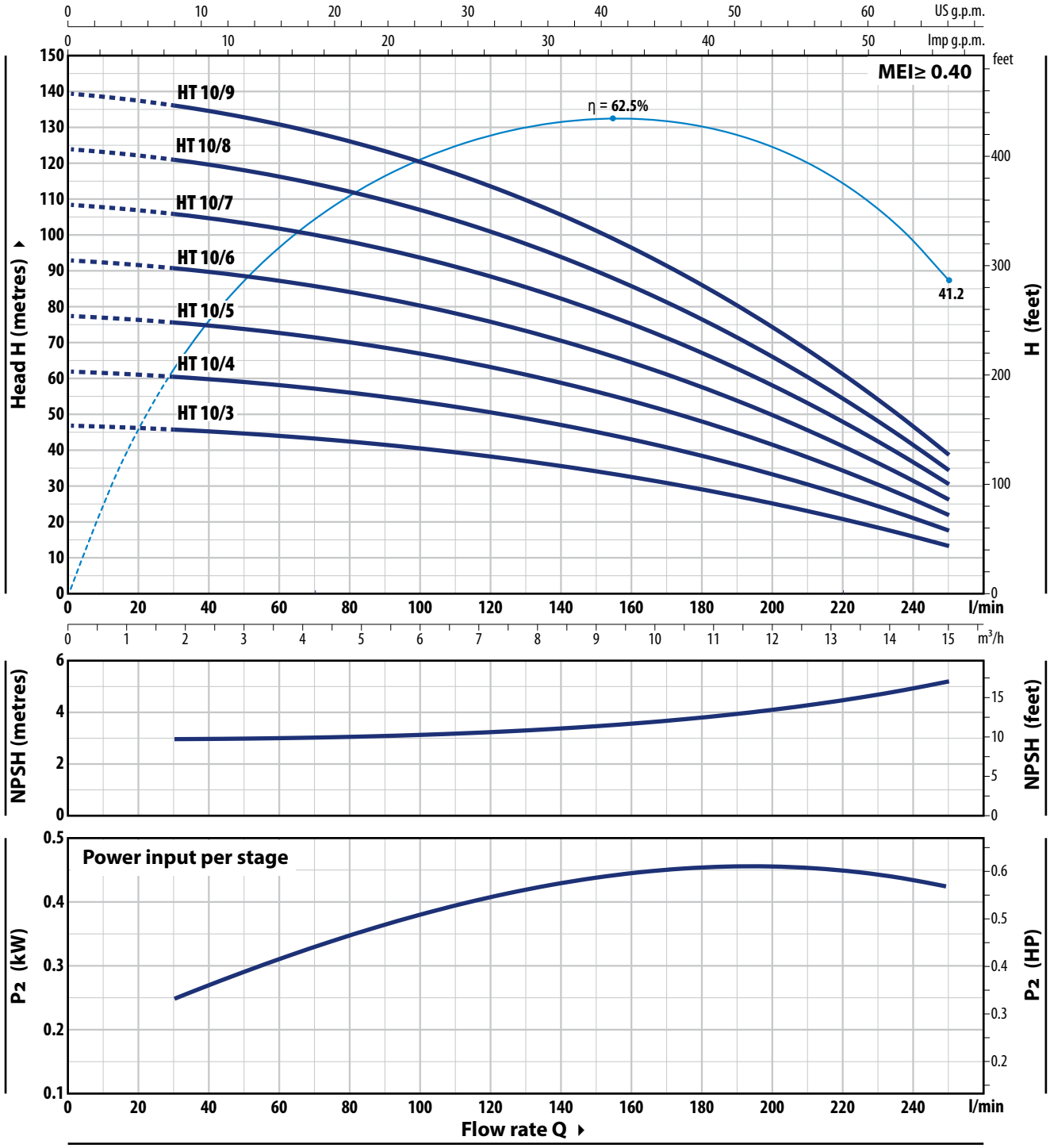

TYPE		POWER (P2)				Q m³/h	0	1.8	3	3.6	4.8	7.2	9	10.2	12	13.2	15
Single-phase	**Three-phase**	**kW**	**HP**	**1~**	**3~**	l/min	**0**	**30**	**50**	**60**	**80**	**120**	**150**	**170**	**200**	**220**	**250**
HTm 10/3	**HT 10/3**	1.5	2				47	45.5	44	43.5	42	38	33.5	30.5	24.7	20.3	13
HTm 10/4	**HT 10/4**	1.8	2.5				62	61	59	58	56	50.5	45	40.5	33	27	18
HTm 10/5	**HT 10/5**	2.2	3				77	75.5	74	73	70	63	56	50.5	41	34	21.5
–	**HT 10/6**	3	4	**IE2**	**IE3**	**H** metres	93	91	88	87	84	76	67.5	61	49.5	40.5	26
–	**HT 10/7**	3	4				108	106	103	102	98	88	79	71	57.5	47.5	30
–	**HT 10/8**	4	5.5				124	121	118	116	112	101	90	81	66	54.5	34.5
–	**HT 10/9**	4	5.5				139	136	133	131	126	113	101	91	74	61	38.5

Q = Flow rate **H** = Total manometric head **HS** = Suction height

Performance curves comply with EN ISO 9906 Grade 3B tolerance limits.

 ※ **Start of production 04.2024** ※

CURVES AND PERFORMANCE DATA – HS=0 m

50 Hz

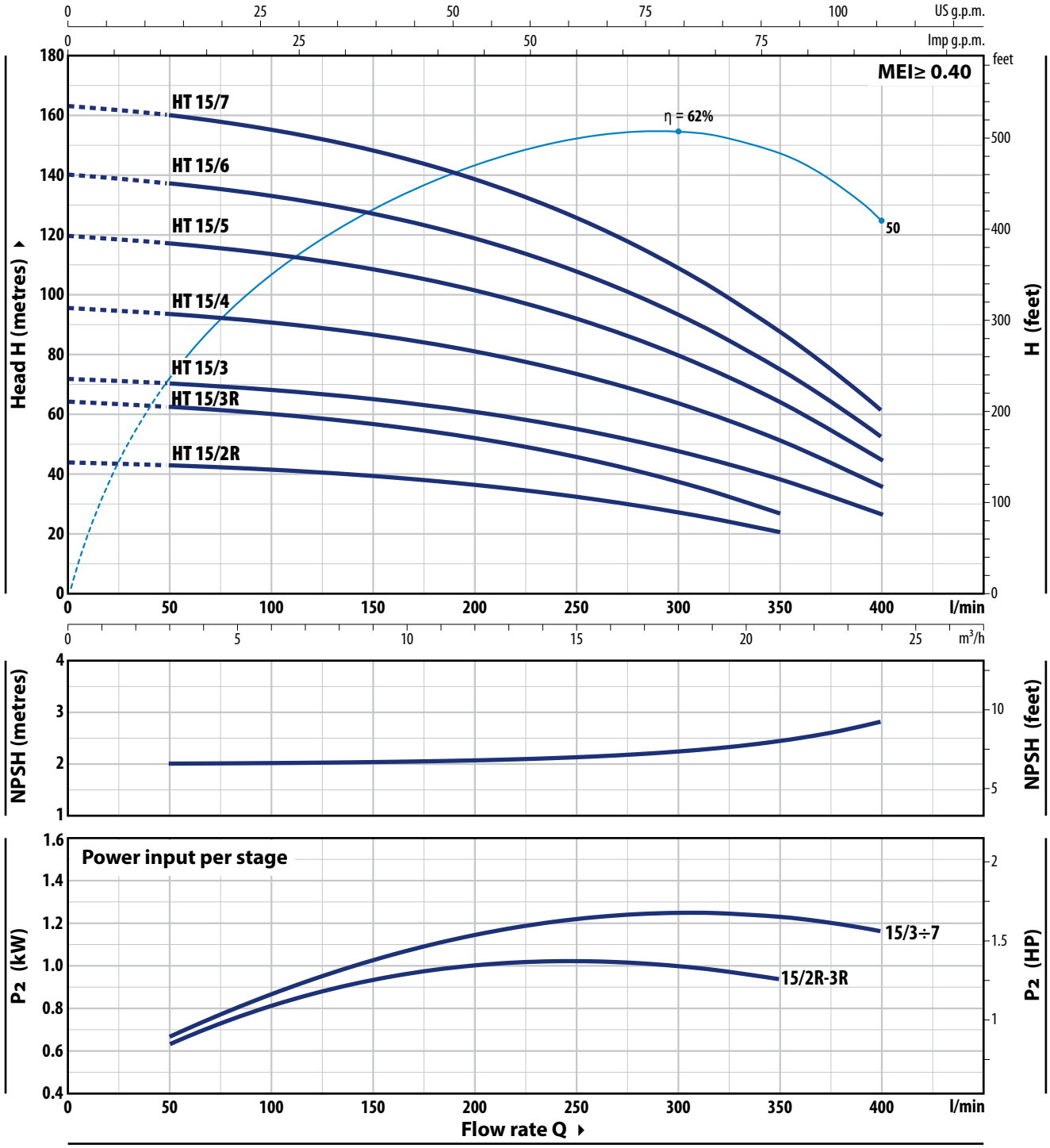

TYPE	POWER (P2)		3~	Q	m³/h	0	3	6	12	18	21	24
Three-phase	kW	HP			l/min	**0**	**50**	**100**	**200**	**300**	**350**	**400**
HT 15/2R	2.2	3				44	43	41.5	36.5	27.5	20.5	
HT 15/3R	3	4				64.5	62.5	60.5	52.0	37.5	27	
HT 15/3	4	5.5				72	70	68.5	61	48	38.5	27
HT 15/4	5.5	7.5	IE3	H metres		96	94	91	81	64	51.5	36
HT 15/5	7.5	10				120	117	114	102	80	64.5	45
HT 15/6	9.2	12.5				140	137	133	119	94	75.5	52.5
HT 15/7	9.2	12.5				–	160	155	139	109	88	61.5

Q = Flow rate **H** = Total manometric head **HS** = Suction height

Performance curves comply with EN ISO 9906 Grade 3B tolerance limits.

HT 30

CURVES AND PERFORMANCE DATA – HS=0 m

50 Hz

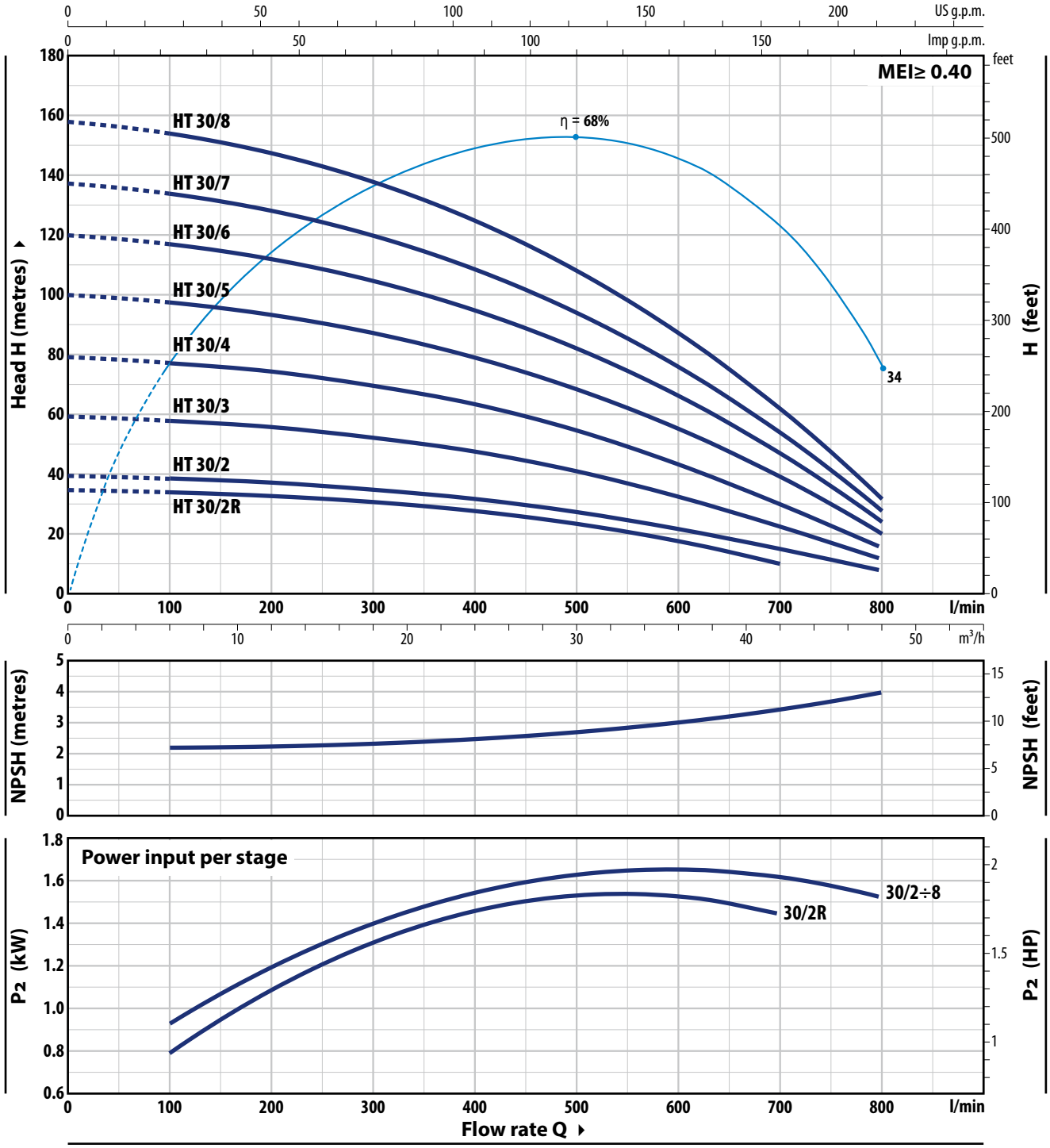

TYPE	POWER (P2)		3~	Q	m³/h	0	6	12	18	24	36	42	48
Three-phase	kW	HP			l/min	**0**	**100**	**200**	**300**	**400**	**600**	**700**	**800**
HT 30/2R	3	4	IE3	H metres		35	34	33	31	28	17.6	10	
HT 30/2	4	5.5				40	39	37.5	35	31.5	22	15.7	8
HT 30/3	5.5	7.5				60	58.5	56	52.5	47.5	33	23.5	12
HT 30/4	7.5	10				80	78	75	70	63	44	31.3	16
HT 30/5	9.2	12.5				100	98	93	87	79	55	39	20
HT 30/6	11	15				120	117	112	105	95	66.5	47	24
HT 30/7	15	20				137	134	128	120	108	76	53.5	27.5
HT 30/8	15	20				158	154	147	138	125	87	62	31.5

Q = Flow rate **H** = Total manometric head **HS** = Suction height

Performance curves comply with EN ISO 9906 Grade 3B tolerance limits.

ABSORPTION

TYPE	VOLTAGE
Single-ph.	**230 V**
HTm 3/4	7.5 A
HTm 3/5	9.0 A
HTm 3/6	10.5 A
HTm 3/7	12.5 A
HTm 5/2	6.1 A
HTm 5/3	8.5 A
HTm 5/4	10.3 A
HTm 5/5	12.5 A
HTm 5/6	13.5 A
HTm 8/3	8.7 A
HTm 8/4	10.5 A
HTm 8/5	12.5 A
HTm 8/6	14.0 A
HTm 10/3	9.5 A
HTm 10/4	11.0 A
HTm 10/5	13.5 A

TYPE	VOLTAGE			
Three-phase	**230 V - Δ**	**400 V - ⅄**	**400 V - Δ**	**690 V - ⅄**
HT 3/4	5.2 A	3.0 A	–	–
HT 3/5	6.1 A	3.5 A	–	–
HT 3/6	6.9 A	4.0 A	–	–
HT 3/7	8.3 A	4.8 A	–	–
HT 3/8	11.2 A	6.5 A	–	–
HT 3/9	11.8 A	6.8 A	–	–
HT 3/10	12.1 A	7.0 A	–	–
HT 5/2	4.9 A	2.8 A	–	–
HT 5/3	5.5 A	3.2 A	–	–
HT 5/4	6.6 A	3.8 A	–	–
HT 5/5	8.3 A	4.8 A	–	–
HT 5/6	9.0 A	5.2 A	–	–
HT 5/7	11.8 A	6.8 A	–	–
HT 5/8	13.0 A	7.5 A	–	–
HT 5/9	14.7 A	8.5 A	–	–
HT 8/3	5.7 A	3.3 A	–	–
HT 8/4	6.9 A	4.0 A	–	–
HT 8/5	8.3 A	4.8 A	–	–
HT 8/6	9.3 A	5.4 A	–	–
HT 8/7	12.1 A	7.0 A	–	–
HT 8/8	14.7 A	8.5 A	–	–
HT 8/9	16.4 A	9.5 A	–	–
HT 8/10	–	–	10.5 A	6.1 A
HT 10/3	5.9 A	3.4 A	–	–
HT 10/4	7.8 A	4.5 A	–	–
HT 10/5	9.0 A	5.2 A	–	–
HT 10/6	11.2 A	6.5 A	–	–
HT 10/7	12.5 A	7.2 A	–	–
HT 10/8	14.4 A	8.3 A	–	–
HT 10/9	15.6 A	9.0 A	–	–
HT 15/2R	10.4 A	6.0 A	–	–
HT 15/3R	12.5 A	7.2 A	–	–
HT 15/3	15.2 A	8.8 A	–	–
HT 15/4	–	–	11.2 A	6.5 A
HT 15/5	–	–	14.2 A	8.2 A
HT 15/6	–	–	15.0 A	8.7 A
HT 15/7	–	–	16.5 A	9.5 A
HT 30/2R	12.1 A	7.0 A	–	–
HT 30/2	15.2 A	8.8 A	–	–
HT 30/3	–	–	11.2 A	6.5 A
HT 30/4	–	–	14.1 A	8.2 A
HT 30/5	–	–	16.5 A	9.5 A
HT 30/6	–	–	19.0 A	11.0 A
HT 30/7	–	–	22.0 A	12.7 A
HT 30/8	–	–	24.5 A	14.2 A

PALLET CAPACITY

TYPE		NO. OF PUMPS
Single-phase	**Three-phase**	
HTm 3/4	**HT 3/4**	12
HTm 3/5	**HT 3/5**	12
HTm 3/6	**HT 3/6**	12
HTm 3/7	**HT 3/7**	12
–	**HT 3/8**	4
–	**HT 3/9**	4
–	**HT 3/10**	4
HTm 5/2	**HT 5/2**	12
HTm 5/3	**HT 5/3**	12
HTm 5/4	**HT 5/4**	12
HTm 5/5	**HT 5/5**	12
HTm 5/6	**HT 5/6**	12
–	**HT 5/7**	4
–	**HT 5/8**	4
–	**HT 5/9**	4
HTm 8/3	**HT 8/3**	12
HTm 8/4	**HT 8/4**	12
HTm 8/5	**HT 8/5**	12
HTm 8/6	**HT 8/6**	12
–	**HT 8/7**	4
–	**HT 8/8**	4
–	**HT 8/9**	4
–	**HT 8/10**	4
HTm 10/3	**HT 10/3**	12
HTm 10/4	**HT 10/4**	12
HTm 10/5	**HT 10/5**	12
–	**HT 10/6**	12
–	**HT 10/7**	4
–	**HT 10/8**	4
–	**HT 10/9**	4
–	**HT 15/2R**	4
–	**HT 15/3R**	4
–	**HT 15/3**	4
–	**HT 15/4**	4
–	**HT 15/5**	4
–	**HT 15/6**	2
–	**HT 15/7**	2
–	**HT 30/2R**	4
–	**HT 30/2**	4
–	**HT 30/3**	4
–	**HT 30/4**	4
–	**HT 30/5**	2
–	**HT 30/6**	2
–	**HT 30/7**	2
–	**HT 30/8**	2

DIMENSIONS AND WEIGHT

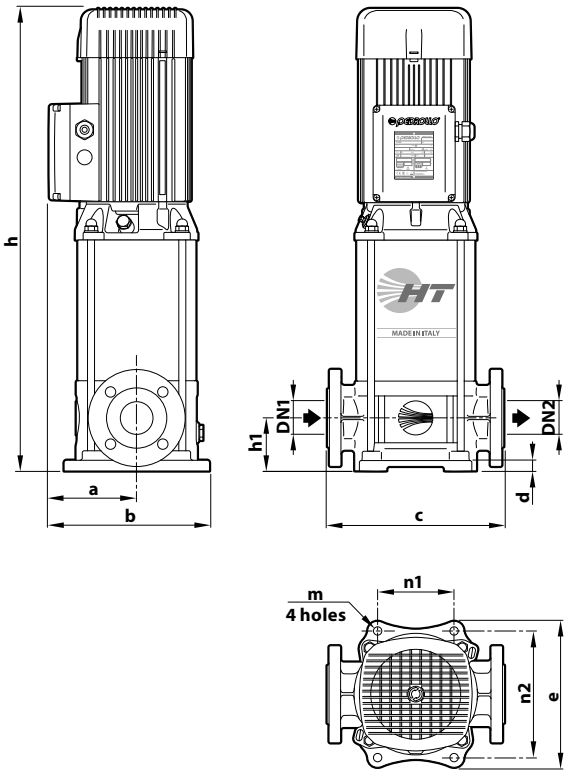

FLANGE

TYPE	DN mm	F mm	D mm	K mm	HOLES N°	HOLES Ø mm
HT 3	**25**	1"	115	85	4	14
HT 5	**32**	1¼"	140	100		18
HT 8	**40**	1½"	150	110		
HT 10	**40**	1½"	150	110		
HT 15	**50**	2"	165	125		
HT 30	**65**	2½"	185	145	8	

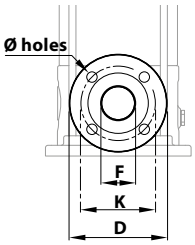

COUNTER-FLANGE

TYPE	DN mm	F mm	D mm	K mm	HOLES N°	HOLES Ø mm
HT 3	**25**	1"	115	85	4	14
HT 5	**32**	1¼"	140	100		18
HT 8	**40**	1½"	150	110		
HT 10	**40**	1½"	150	110		
HT 15	**50**	2"	165	125		
HT 30	**65**	2½"	185	145	8	

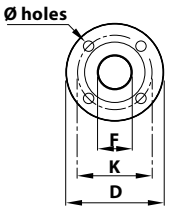

TYPE		PORTS		N°	DIMENSIONS mm										kg	
Single-ph.	**Three-ph.**	**DN1**	**DN2**	STAGES	a	b	c	d	e	h	h1	n1	n2	m	1~	3~
HTm 3/4	**HT 3/4**	**1"**	**1"**	4	126	231	250	15	210	509	75	100	180	Ø 13	33.5	33.5
HTm 3/5	**HT 3/5**			5						535					33.7	33.7
HTm 3/6	**HT 3/6**			6						561					35.0	35.0
HTm 3/7	**HT 3/7**			7						607					39.9	39.9
–	**HT 3/8**			8	151	257				685					–	47.2
–	**HT 3/9**			9						711					–	48.2
–	**HT 3/10**			10						737					–	49.1
HTm 5/2	**HT 5/2**	**1¼"**	**1¼"**	2	126	231				457					33.0	33.0
HTm 5/3	**HT 5/3**			3						483					33.2	33.2
HTm 5/4	**HT 5/4**			4						509					35.2	35.2
HTm 5/5	**HT 5/5**			5						555					37.5	37.5
HTm 5/6	**HT 5/6**			6						581					38.5	38.5
–	**HT 5/7**			7	151	257				659					–	47.3
–	**HT 5/8**			8						685					–	48.3
–	**HT 5/9**			9						711					–	52.5
HTm 8/3	**HT 8/3**	**1½"**	**1½"**	3	126	231	280			488	80				34.6	34.6
HTm 8/4	**HT 8/4**			4						514					36.6	36.6
HTm 8/5	**HT 8/5**			5						560					40.1	40.1
HTm 8/6	**HT 8/6**			6						586					40.9	40.9
–	**HT 8/7**			7	151	257				664					–	48.6
–	**HT 8/8**			8						690					–	52.7
–	**HT 8/9**			9						716					–	53.7
–	**HT 8/10**			10						742					–	58.7
HTm 10/3	**HT 10/3**	**1½"**	**1½"**	3	126	231				488					34.7	34.7
HTm 10/4	**HT 10/4**			4						534					36.7	36.7
HTm 10/5	**HT 10/5**			5						560					40.2	40.2
–	**HT 10/6**			6	151	257				638					–	48.5
–	**HT 10/7**			7						664					–	48.7
–	**HT 10/8**			8						690					–	52.8
–	**HT 10/9**			9						716					–	53.8
–	**HT 15/2R**	**2"**	**2"**	2	151	275	300	18	247	589	90	130	215	Ø 14	–	53.0
–	**HT 15/3R**			3						633					–	53.5
–	**HT 15/3**			3						633					–	58.0
–	**HT 15/4**			4						677					–	64.0
–	**HT 15/5**			5						771					–	72.0
–	**HT 15/6**			6	181	305				900					–	116.5
–	**HT 15/7**			7						944					–	117.0
–	**HT 30/2R**	**2½"**	**2½"**	2	151	275	320			604	105				–	55.0
–	**HT 30/2**			2						604					–	58.0
–	**HT 30/3**			3						648					–	63.0
–	**HT 30/4**			4						742					–	71.5
–	**HT 30/5**			5	181	305				871					–	125.0
–	**HT 30/6**			6						915					–	125.5
–	**HT 30/7**			7						959					–	138.0
–	**HT 30/8**			8						1003					–	138.5

MATERIALS AND COMPONENTS

1	**Pump body**	Cast iron JL250 with cataphoresis treatment, fitted with flanged and threaded ISO 228/1 ports
2	**Cover**	Cast iron JL250 with cataphoresis treatment
3	**External sleeve**	Stainless steel **AISI 304**
4	**Impellers**	Stainless steel **AISI 304**
5	**Diffusers**	Stainless steel **AISI 304**

6 Mechanical seal

Water pump	Seal	Shaft	Materials
HT 3 - 5 - 8 - 10	**FN-18**	Ø 18 mm	Graphite / Ceramic / NBR
HT 15 - 30	**FN-KU-24** ISO 3069 EN 12756	Ø 24 mm	Graphite / Ceramic / NBR

7 Shaft Stainless steel **AISI 431**

8 Electric motor

- **HTm**: single-phase 230 V - 50 Hz with capacitor and winding integrated thermal motor protection
- **HT**: three-phase
  230/400 V - 50 Hz up to 4 kW
  400/690 V - 50 Hz 5.5 to 15 kW

※ Pumps are equipped with high-efficiency motors (IEC 60034-30-1)
class **IE2** for single-phase models
class **IE3** for three-phase models

Continuous running duty **S1**

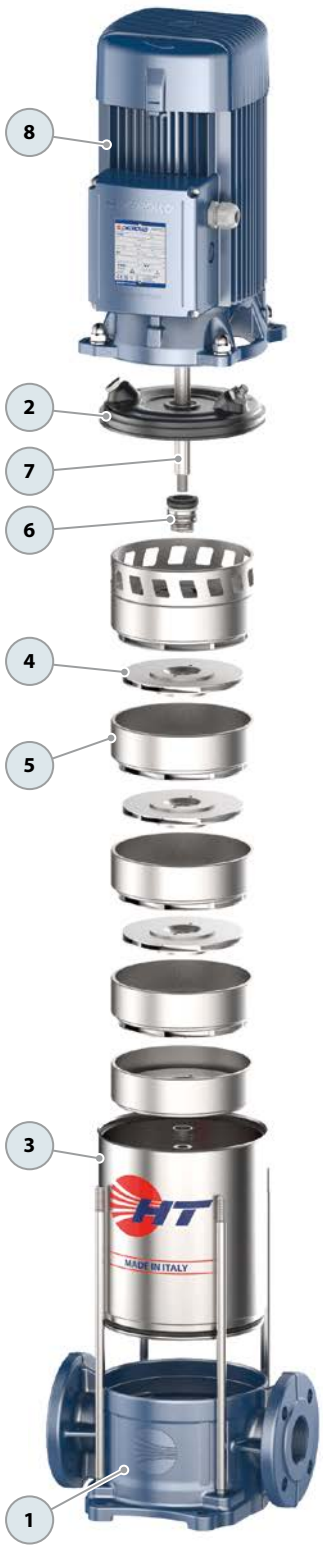

HT-PRO Stainless steel multi-stage centrifugal pumps

Clean water
Civil use
Agricultural use
Industrial use

※ Pump entirely made of stainless steel

※ HT-PRO pumps are designed for high hydraulic performance combined with a robust, compact and reliable mechanical construction.

※ Pump body: **Stainless steel AISI 304**
※ Cover: **Stainless steel AISI 304**
※ Jacket **Stainless steel AISI 304**
※ Impellers: **Stainless steel AISI 304**
※ Diffusers: **Stainless steel AISI 304**
※ Shaft **Stainless steel AISI 431**

PERFORMANCE RANGE

- Flow rate up to **800 l/min** (48 m³/h)
- Head up to **160 m**

INSTALLATION AND USE

Designed to transfer clean water free from abrasive particles and liquids that will not damage the pump's components.

Their high efficiency and adaptability to a wide variety of applications make them an ideal choice in the domestic, civil, agricultural, and industrial sectors, particularly for water distribution along pressure tanks to increase overall network pressure. Suggested uses include fire-fighting systems, heavy-duty cleaning applications, industrial power washers, and irrigation.

KEY FEATURES

※ The multi-stage stainless steel construction guarantees a long service life and a very low noise threshold during operation.
※ Stainless steel components extend service life and enhance efficiency.
※ Multi-stage design results in exceptionally quiet operation

APPLICATION LIMITS

- Manometric suction head up to **7 m**
- Liquid temperature between **-15 °C** and **+90 °C**
- Ambient temperature up to **+40 °C**
- Maximum working pressure **16 bar**

ELECTRIC MOTOR

The three-phase pumps are equipped with newly developed electric motors designed to work with inverters, which guarantee stable and quiet operation.

Efficiency class **IE3** for three-phase motors and **IE2** for single-phase motors, with class F insulation and IPX4 protection.

AVAILABLE UPON REQUEST

※ AISI 316 stainless steel pump
※ Handling of liquids with higher or lower temperatures.
※ Pump body with NPT threaded ports ANSI B 1.20.1
※ Pump protection kit to prevent dry running
※ O-rings in EPDM or VITON (standard version in NBR)
※ Different voltage requirements 60 Hz frequency

CURVES AND PERFORMANCE DATA – HS=0 m

50 Hz

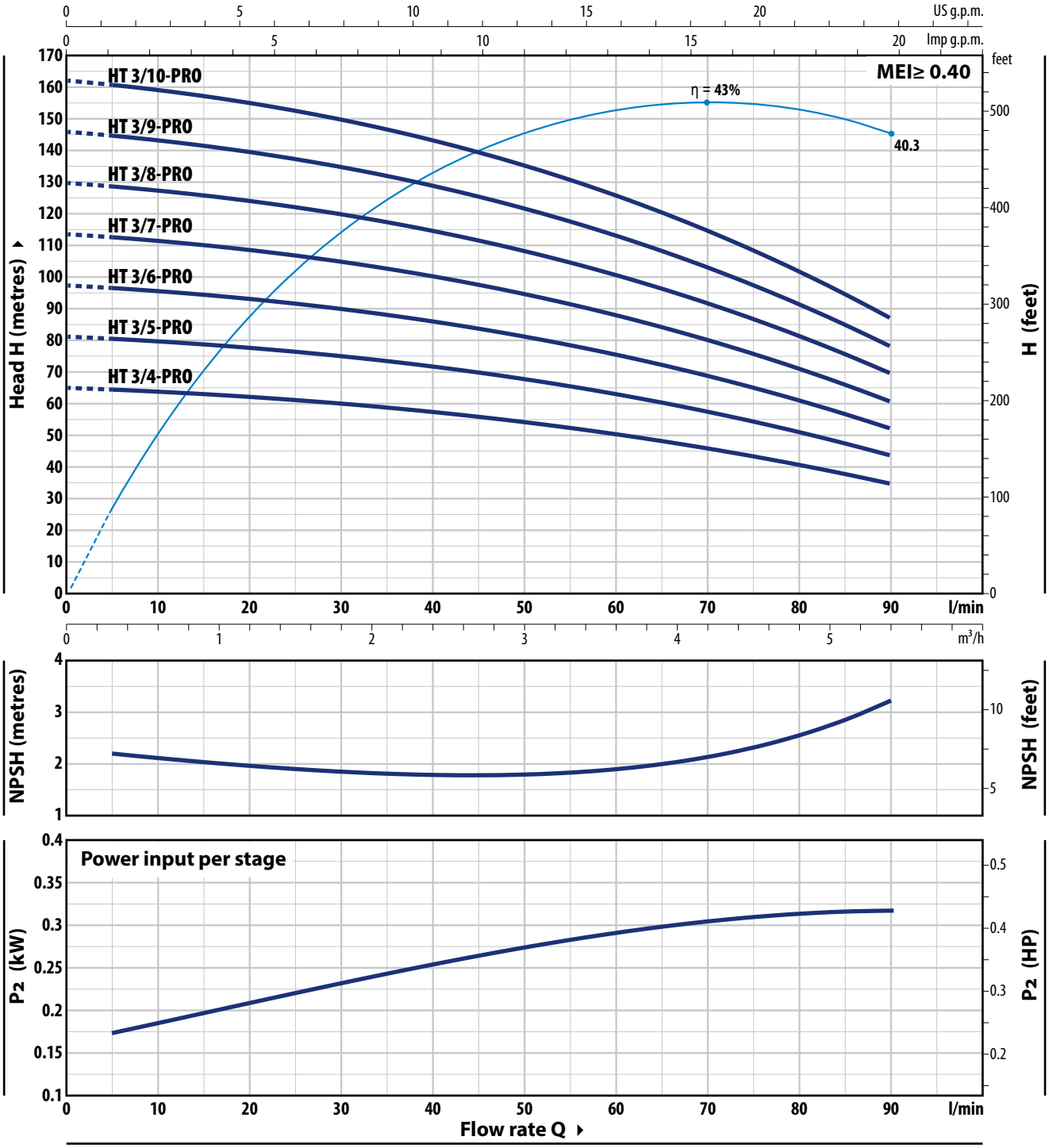

TYPE		POWER (P2)				Q m³/h	0	0.3	0.6	1.2	2.4	3.6	4.8	5.4
Single-phase	**Three-phase**	**kW**	**HP**	**1~**	**3~**	l/min	**0**	**5**	**10**	**20**	**40**	**60**	**80**	**90**
HTm 3/4 - PRO	**HT 3/4 - PRO**	0.75	1				65	65	63.5	62	57	50	40.5	35
HTm 3/5 - PRO	**HT 3/5 - PRO**	1.1	1.5				81	80	79	77	71	62.5	51	44
HTm 3/6 - PRO	**HT 3/6 - PRO**	1.5	2				97	96	95	93	86	75	61	52
HTm 3/7 - PRO	**HT 3/7 - PRO**	1.8	2.5	**IE2**	**IE3**	**H** metres	113	112	111	108	100	88	71	61
※ –	**HT 3/8 - PRO**	2.2	3				129	128	127	124	114	100	81	69.5
※ –	**HT 3/9 - PRO**	3	4				146	144	143	139	129	113	91	78
※ –	**HT 3/10 - PRO**	3	4				–	160	159	155	143	125	102	87

Q = Flow rate **H** = Total manometric head **HS** = Suction height

Performance curves comply with EN ISO 9906 Grade 3B tolerance limits.

HT 5 - PRO

CURVES AND PERFORMANCE DATA – HS=0 m

50 Hz

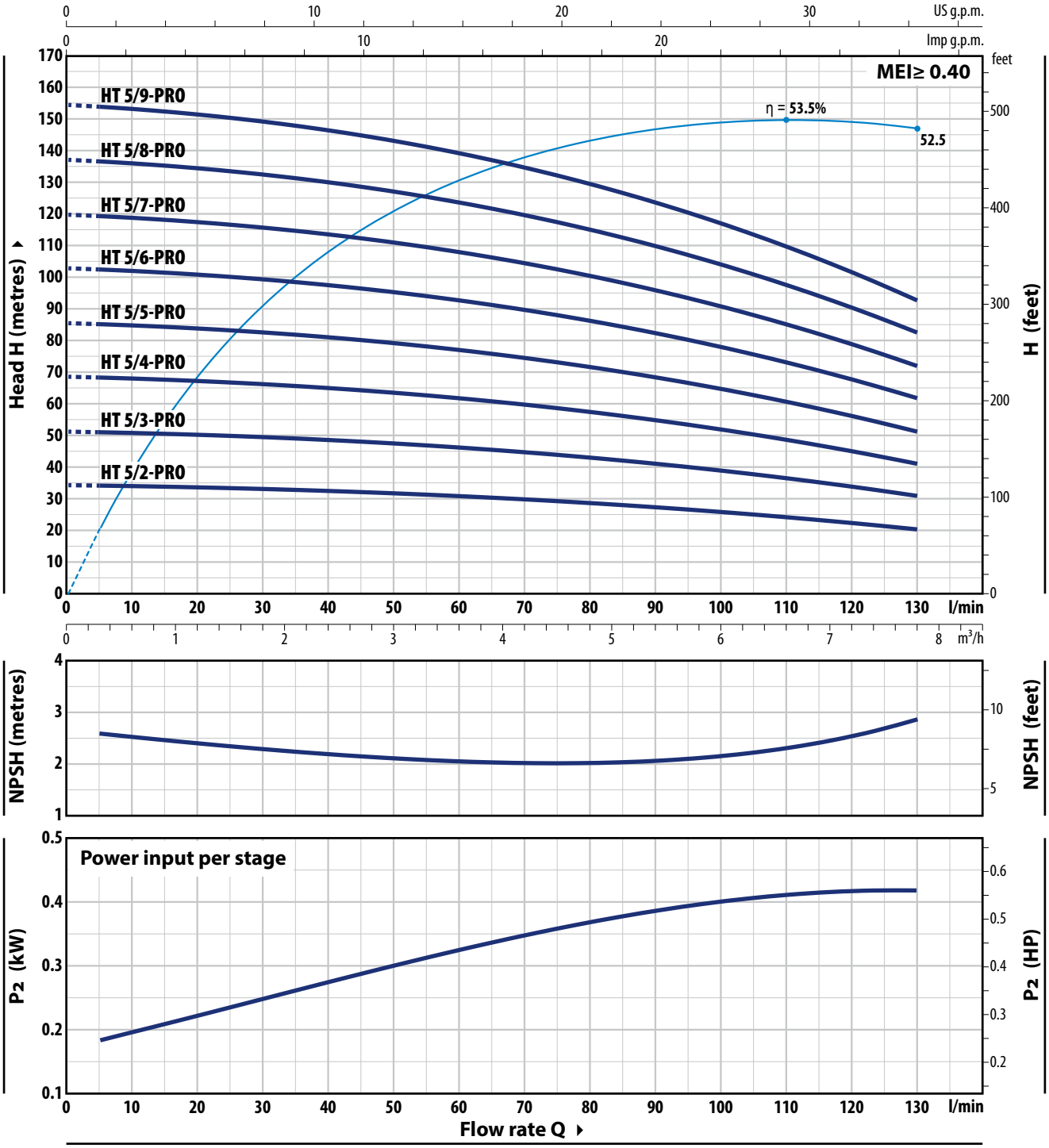

TYPE		POWER (P2)				Q m³/h	0	0.3	0.6	1.2	2.4	3.6	4.8	5.4	6	7.8
Single-phase	**Three-phase**	**kW**	**HP**	**1~**	**3~**	l/min	**0**	**5**	**10**	**20**	**40**	**60**	**80**	**90**	**100**	**130**
HTm 5/2 - PRO	**HT 5/2 - PRO**	0.75	1				35	35	32.7	32.3	32.5	31	25.5	27.5	26	20.5
HTm 5/3 - PRO	**HT 5/3 - PRO**	1.1	1.5				51.5	51.5	51	50.5	49	46.5	43	41	39	31
HTm 5/4 - PRO	**HT 5/4 - PRO**	1.5	2				68.5	68.5	68	67	65	62	57.5	55	52	41
HTm 5/5 - PRO	**HT 5/5 - PRO**	1.8	2.5	**IE2**	**IE3**	**H** metres	86	85	85	84	81	77	72	68.5	65	51.5
HTm 5/6 - PRO	**HT 5/6 - PRO**	2.2	3				103	103	102	101	98	93	86	82	78	62
※ **–**	**HT 5/7 - PRO**	3	4				120	120	119	118	114	108	101	96	91	72
※ **–**	**HT 5/8 - PRO**	3	4				137	137	136	134	130	124	115	110	104	82
※ **–**	**HT 5/9 - PRO**	4	5.5				154	154	153	151	146	139	129	124	117	93

Q = Flow rate **H** = Total manometric head **HS** = Suction height

Performance curves comply with EN ISO 9906 Grade 3B tolerance limits.

 ※ **Start of production 06.2024** ※

CURVES AND PERFORMANCE DATA – HS=0 m

50 Hz

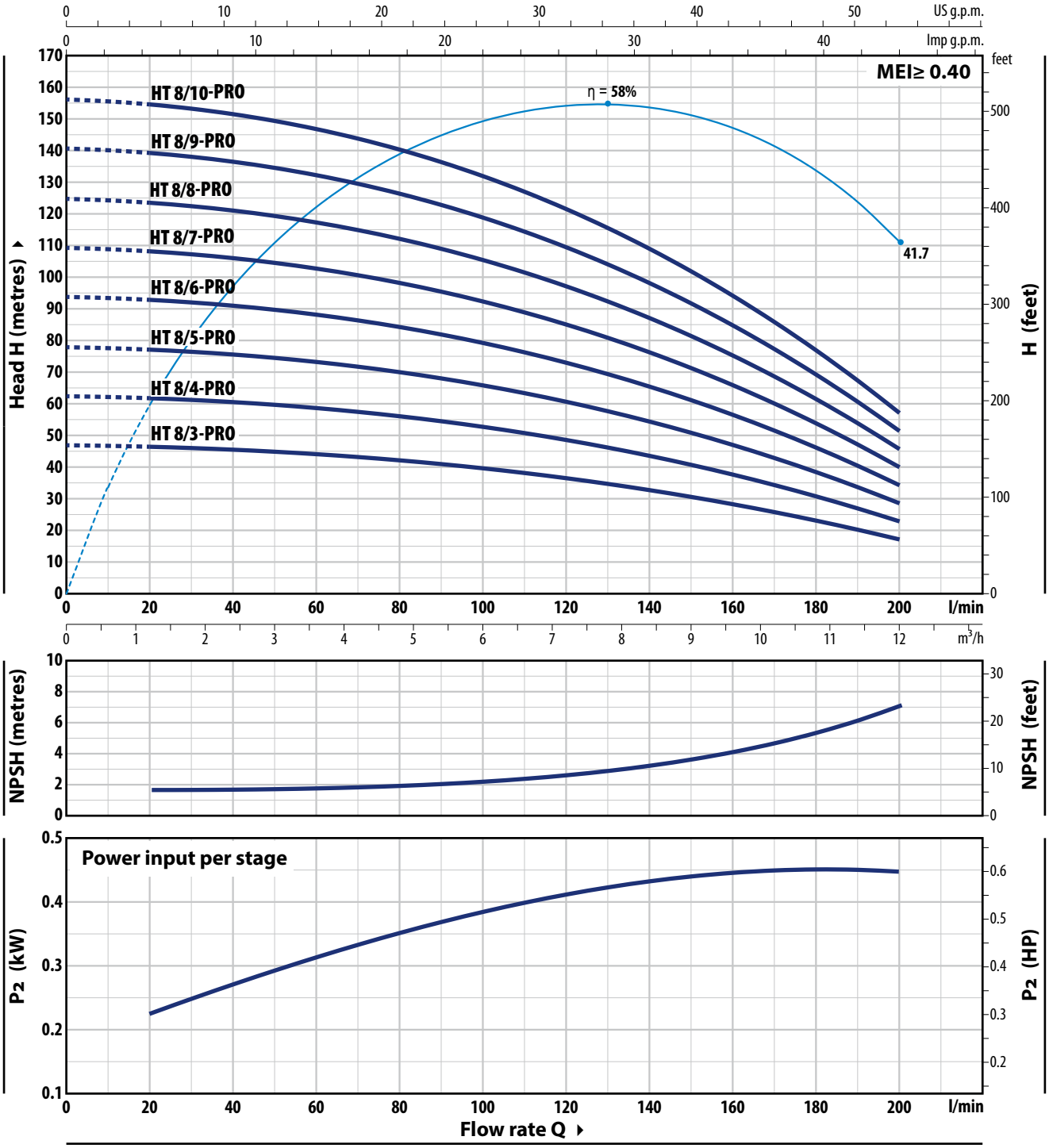

TYPE		POWER (P2)				Q m³/h	0	1.2	2.4	3.6	4.8	6.0	7.2	8.4	9.6	10.8	12.0
Single-phase	Three-phase	kW	HP	1~	3~	l/min	**0**	**20**	**40**	**60**	**80**	**100**	**120**	**140**	**160**	**180**	**200**
HTm 8/3 - PRO	HT 8/3 - PRO	1.1	1.5	IE2	IE3	H metres	47	46.5	45.5	44	42	39.5	36.5	32.5	28	23	17
HTm 8/4 - PRO	HT 8/4 - PRO	1.5	2				62.5	62	60.5	58.5	56	53	48.5	43.5	37.5	31	23
HTm 8/5 - PRO	HT 8/5 - PRO	1.8	2.5				78	77.5	76	73	70	66	61	54.5	47	38.5	28.5
HTm 8/6 - PRO	HT 8/6 - PRO	2.2	3				94	93	91	88	84	79	73	65.5	56.5	46	34.5
※ –	HT 8/7 - PRO	3	4				109	108	106	103	98	92	85	76	66	54	40
※ –	HT 8/8 - PRO	4	5.5				125	124	121	117	112	106	97	87	75	61.5	45.5
※ –	HT 8/9 - PRO	4	5.5				141	139	136	132	126	119	109	98	85	69	51.5
※ –	HT 8/10 - PRO	5.5	7.5				156	155	152	147	140	132	122	109	94	77	57

Q = Flow rate **H** = Total manometric head **HS** = Suction height

Performance curves comply with EN ISO 9906 Grade 3B tolerance limits.

HT 10 - PRO

CURVES AND PERFORMANCE DATA – HS=0 m

50 Hz

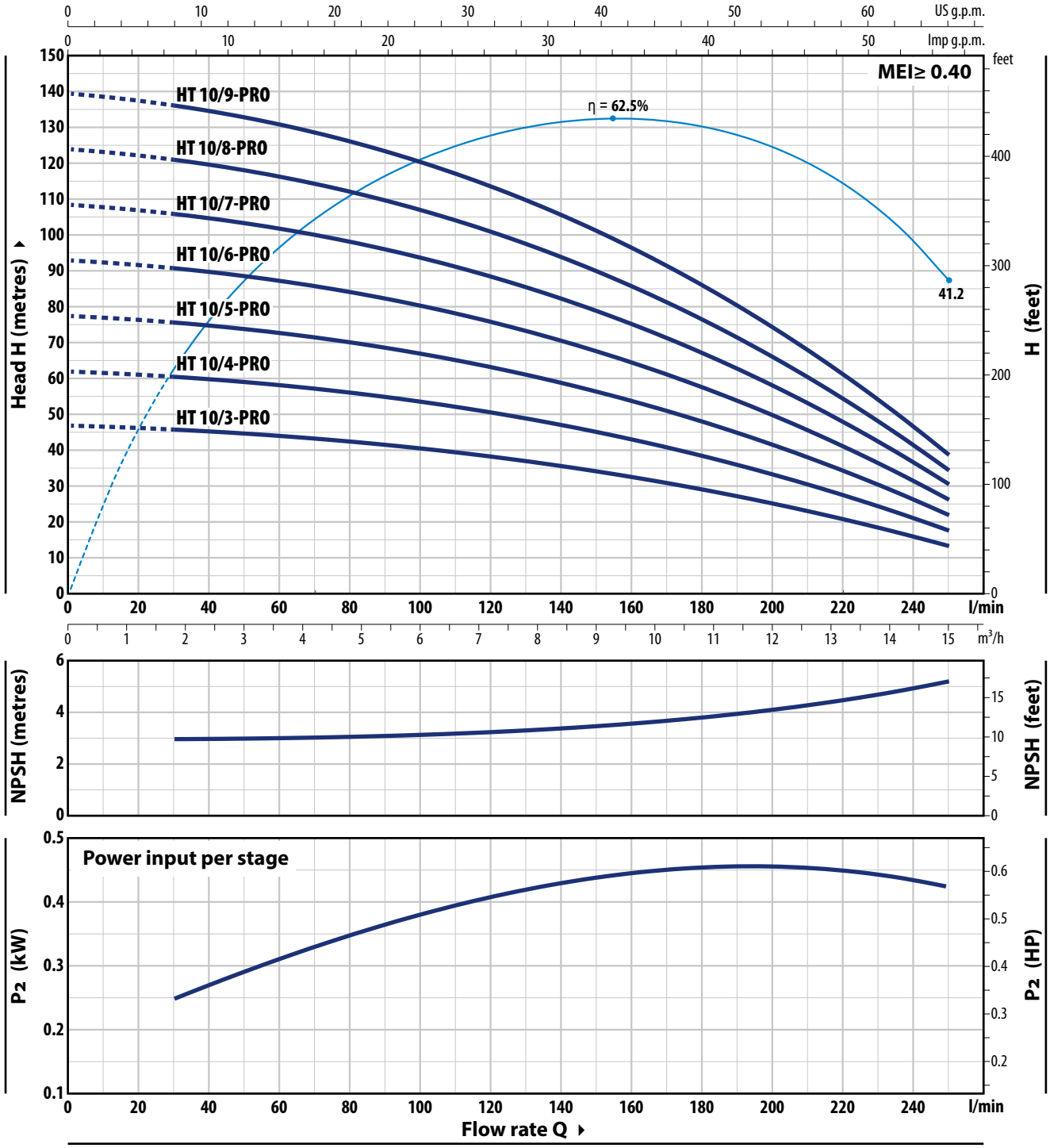

TYPE		POWER (P2)				Q m³/h	0	1.8	3	3.6	4.8	7.2	9	10.2	12	13.2	15
Single-phase	Three-phase	kW	HP	1~	3~	l/min	**0**	**30**	**50**	**60**	**80**	**120**	**150**	**170**	**200**	**220**	**250**
HTm 10/3 - PRO	**HT 10/3 - PRO**	1.5	2				47	45.5	44	43.5	42	38	33.5	30.5	24.7	20.3	13
HTm 10/4 - PRO	**HT 10/4 - PRO**	1.8	2.5				62	61	59	58	56	50.5	45	40.5	33	27	18
HTm 10/5 - PRO	**HT 10/5 - PRO**	2.2	3				77	75.5	74	73	70	63	56	50.5	41	34	21.5
–	**HT 10/6 - PRO**	3	4	**IE2**	**IE3**	**H** metres	93	91	88	87	84	76	67.5	61	49.5	40.5	26
–	**HT 10/7 - PRO**	3	4				108	106	103	102	98	88	79	71	57.5	47.5	30
–	**HT 10/8 - PRO**	4	5.5				124	121	118	116	112	101	90	81	66	54.5	34.5
–	**HT 10/9 - PRO**	4	5.5				139	136	133	131	126	113	101	91	74	61	38.5

Q = Flow rate **H** = Total manometric head **HS** = Suction height

Performance curves comply with EN ISO 9906 Grade 3B tolerance limits.

 ※ **Start of production 06.2024** ※

HT 15 - PRO

CURVES AND PERFORMANCE DATA – HS=0 m

50 Hz

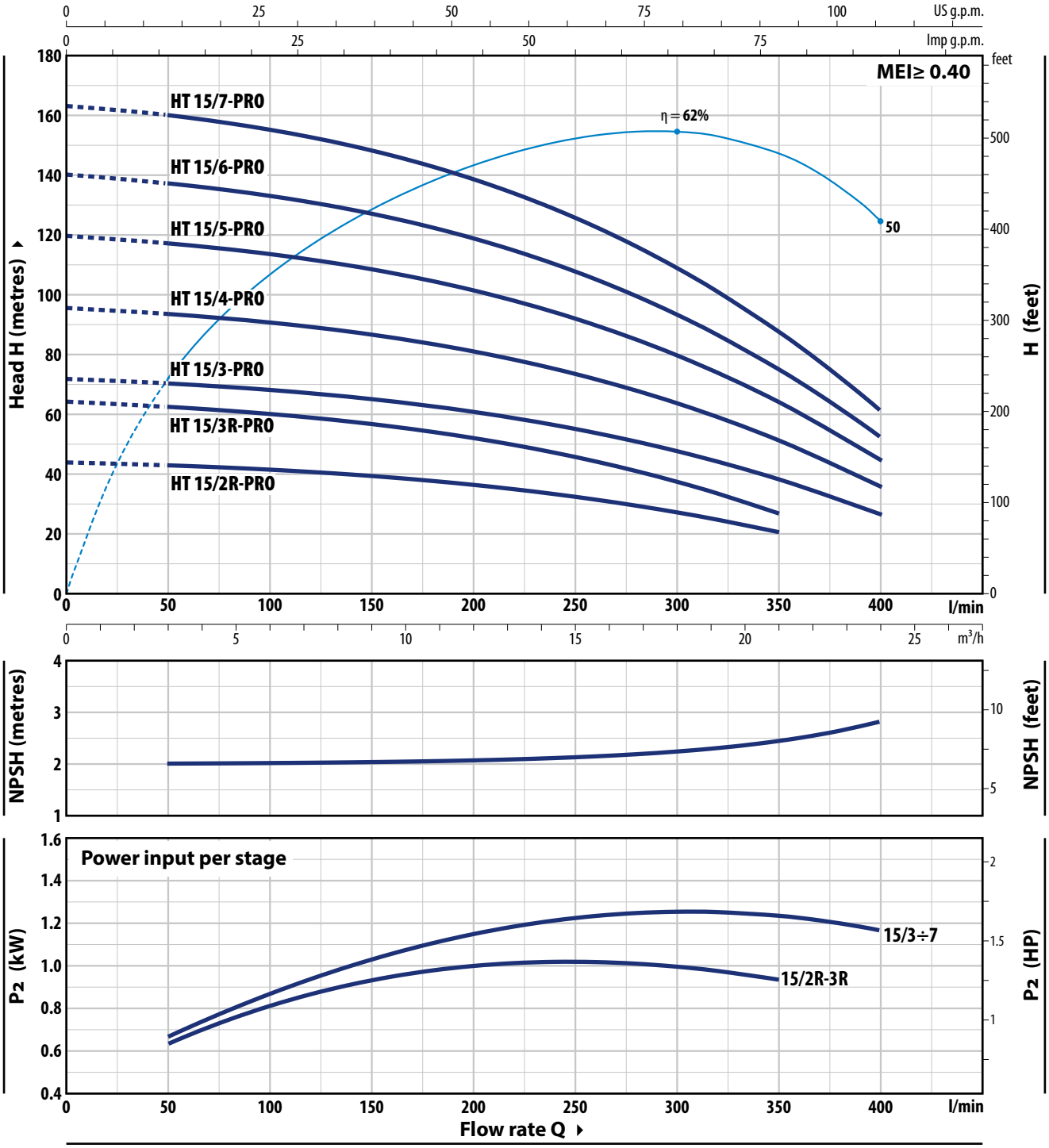

TYPE	POWER (P2)			Q m³/h	0	3	6	12	18	21	24
Three-phase	kW	HP	3~	l/min	**0**	**50**	**100**	**200**	**300**	**350**	**400**
HT 15/2R - PRO	2.2	3			44	43	41.5	36.5	27.5	20.5	
HT 15/3R - PRO	3	4			64.5	62.5	60.5	52.0	37.5	27	
HT 15/3 - PRO	4	5.5			72	70	68.5	61	48	38.5	27
HT 15/4 - PRO	5.5	7.5	IE3	H metres	96	94	91	81	64	51.5	36
HT 15/5 - PRO	7.5	10			120	117	114	102	80	64.5	45
HT 15/6 - PRO	9.2	12.5			140	137	133	119	94	75.5	52.5
HT 15/7 - PRO	9.2	12.5			–	160	155	139	109	88	61.5

Q = Flow rate **H** = Total manometric head **HS** = Suction height

Performance curves comply with EN ISO 9906 Grade 3B tolerance limits.

HT 30 - PRO

CURVES AND PERFORMANCE DATA – HS=0 m

50 Hz

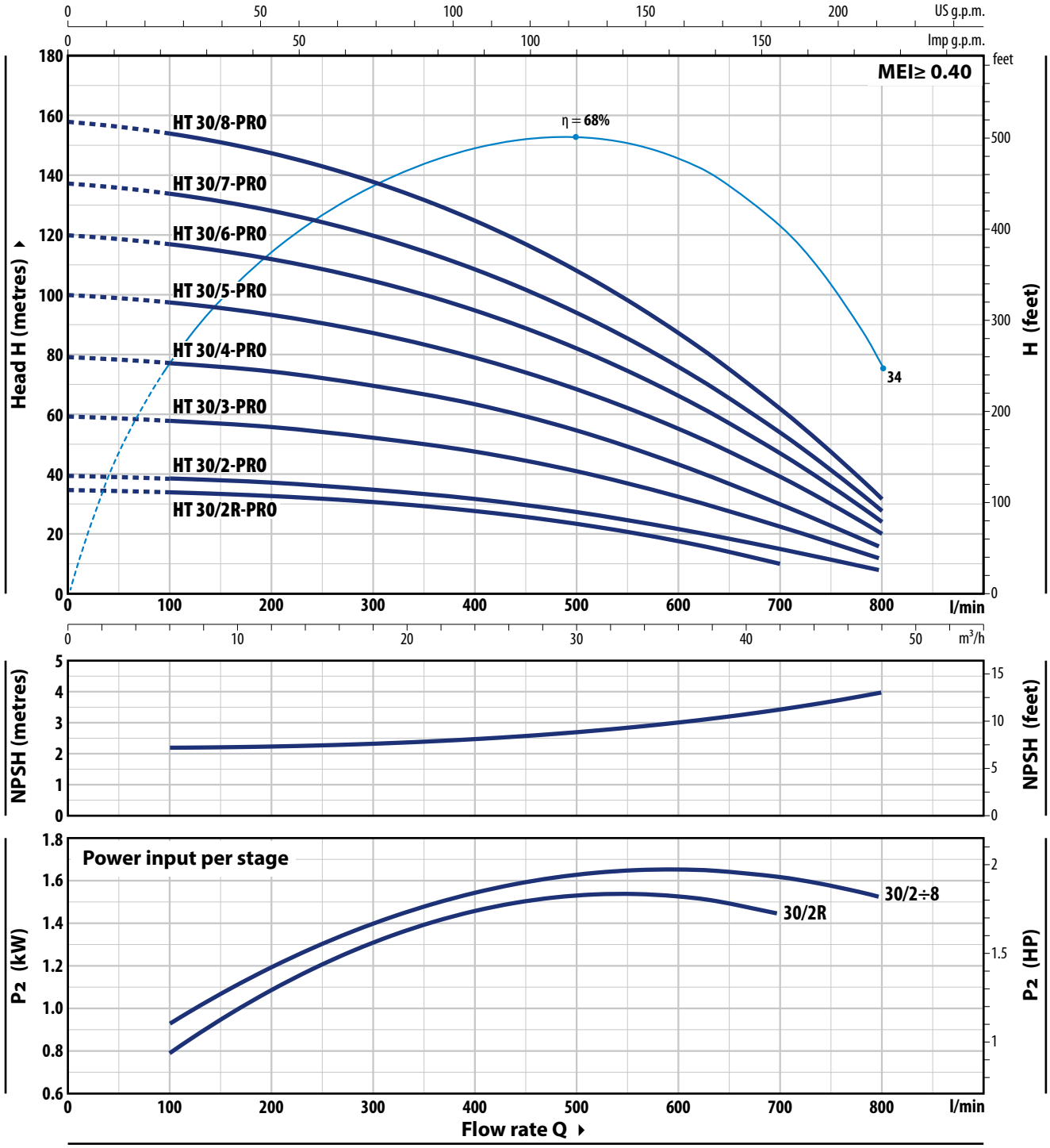

TYPE	POWER (P2)			Q m³/h	0	6	12	18	24	36	42	48
Three-phase	kW	HP	3~	l/min	**0**	**100**	**200**	**300**	**400**	**600**	**700**	**800**
HT 30/2R - PRO	3	4	IE3	H metres	35	34	33	31	28	17.6	10	
HT 30/2 - PRO	4	5.5			40	39	37.5	35	31.5	22	15.7	8
HT 30/3 - PRO	5.5	7.5			60	58.5	56	52.5	47.5	33	23.5	12
HT 30/4 - PRO	7.5	10			80	78	75	70	63	44	31.3	16
HT 30/5 - PRO	9.2	12.5			100	98	93	87	79	55	39	20
HT 30/6 - PRO	11	15			120	117	112	105	95	66.5	47	24
HT 30/7 - PRO	15	20			137	134	128	120	108	76	53.5	27.5
HT 30/8 - PRO	15	20			158	154	147	138	125	87	62	31.5

Q = Flow rate **H** = Total manometric head **HS** = Suction height

Performance curves comply with EN ISO 9906 Grade 3B tolerance limits.

ABSORPTION

TYPE	VOLTAGE
Single-phase	**230 V**
HTm 3/4 - PRO	7.5 A
HTm 3/5 - PRO	9.0 A
HTm 3/6 - PRO	10.5 A
HTm 3/7 - PRO	12.5 A
HTm 5/2 - PRO	6.1 A
HTm 5/3 - PRO	8.5 A
HTm 5/4 - PRO	10.3 A
HTm 5/5 - PRO	12.5 A
HTm 5/6 - PRO	13.5 A
HTm 8/3 - PRO	8.7 A
HTm 8/4 - PRO	10.5 A
HTm 8/5 - PRO	12.5 A
HTm 8/6 - PRO	14.0 A
HTm 10/3 - PRO	9.5 A
HTm 10/4 - PRO	11.0 A
HTm 10/5 - PRO	13.5 A

TYPE	VOLTAGE			
Three-phase	**230 V - Δ**	**400 V - ⅄**	**400 V - Δ**	**690 V - ⅄**
HT 3/4 - PRO	5.2 A	3.0 A	–	–
HT 3/5 - PRO	6.1 A	3.5 A	–	–
HT 3/6 - PRO	6.9 A	4.0 A	–	–
HT 3/7 - PRO	8.3 A	4.8 A	–	–
HT 3/8 - PRO	11.2 A	6.5 A	–	–
HT 3/9 - PRO	11.8 A	6.8 A	–	–
HT 3/10 - PRO	12.1 A	7.0 A	–	–
HT 5/2 - PRO	4.9 A	2.8 A	–	–
HT 5/3 - PRO	5.5 A	3.2 A	–	–
HT 5/4 - PRO	6.6 A	3.8 A	–	–
HT 5/5 - PRO	8.3 A	4.8 A	–	–
HT 5/6 - PRO	9.0 A	5.2 A	–	–
HT 5/7 - PRO	11.8 A	6.8 A	–	–
HT 5/8 - PRO	13.0 A	7.5 A	–	–
HT 5/9 - PRO	14.7 A	8.5 A	–	–
HT 8/3 - PRO	5.7 A	3.3 A	–	–
HT 8/4 - PRO	6.9 A	4.0 A	–	–
HT 8/5 - PRO	8.3 A	4.8 A	–	–
HT 8/6 - PRO	9.3 A	5.4 A	–	–
HT 8/7 - PRO	12.1 A	7.0 A	–	–
HT 8/8 - PRO	14.7 A	8.5 A	–	–
HT 8/9 - PRO	16.4 A	9.5 A	–	–
HT 8/10 - PRO	–	–	10.5 A	6.1 A
HT 10/3 - PRO	5.9 A	3.4 A	–	–
HT 10/4 - PRO	7.8 A	4.5 A	–	–
HT 10/5 - PRO	9.0 A	5.2 A	–	–
HT 10/6 - PRO	11.2 A	6.5 A	–	–
HT 10/7 - PRO	12.5 A	7.2 A	–	–
HT 10/8 - PRO	14.4 A	8.3 A	–	–
HT 10/9 - PRO	15.6 A	9.0 A	–	–
HT 15/2R - PRO	10.4 A	6.0 A	–	–
HT 15/3R - PRO	12.5 A	7.2 A	–	–
HT 15/3 - PRO	15.2 A	8.8 A	–	–
HT 15/4 - PRO	–	–	11.2 A	6.5 A
HT 15/5 - PRO	–	–	14.2 A	8.2 A
HT 15/6 - PRO	–	–	15.0 A	8.7 A
HT 15/7 - PRO	–	–	16.5 A	9.5 A
HT 30/2R - PRO	12.1 A	7.0 A	–	–
HT 30/2 - PRO	15.2 A	8.8 A	–	–
HT 30/3 - PRO	–	–	11.2 A	6.5 A
HT 30/4 - PRO	–	–	14.1 A	8.2 A
HT 30/5 - PRO	–	–	16.5 A	9.5 A
HT 30/6 - PRO	–	–	19.0 A	11.0 A
HT 30/7 - PRO	–	–	22.0 A	12.7 A
HT 30/8 - PRO	–	–	24.5 A	14.2 A

PALLET CAPACITY

TYPE		NO. OF PUMPS
Single-phase	**Three-phase**	
HTm 3/4 - PRO	**HT 3/4 - PRO**	12
HTm 3/5 - PRO	**HT 3/5 - PRO**	12
HTm 3/6 - PRO	**HT 3/6 - PRO**	12
HTm 3/7 - PRO	**HT 3/7 - PRO**	12
–	**HT 3/8 - PRO**	4
–	**HT 3/9 - PRO**	4
–	**HT 3/10 - PRO**	4
HTm 5/2 - PRO	**HT 5/2 - PRO**	12
HTm 5/3 - PRO	**HT 5/3 - PRO**	12
HTm 5/4 - PRO	**HT 5/4 - PRO**	12
HTm 5/5 - PRO	**HT 5/5 - PRO**	12
HTm 5/6 - PRO	**HT 5/6 - PRO**	12
–	**HT 5/7 - PRO**	4
–	**HT 5/8 - PRO**	4
–	**HT 5/9 - PRO**	4
HTm 8/3 - PRO	**HT 8/3 - PRO**	12
HTm 8/4 - PRO	**HT 8/4 - PRO**	12
HTm 8/5 - PRO	**HT 8/5 - PRO**	12
HTm 8/6 - PRO	**HT 8/6 - PRO**	12
–	**HT 8/7 - PRO**	4
–	**HT 8/8 - PRO**	4
–	**HT 8/9 - PRO**	4
–	**HT 8/10 - PRO**	4
HTm 10/3 - PRO	**HT 10/3 - PRO**	12
HTm 10/4 - PRO	**HT 10/4 - PRO**	12
HTm 10/5 - PRO	**HT 10/5 - PRO**	12
–	**HT 10/6 - PRO**	12
–	**HT 10/7 - PRO**	4
–	**HT 10/8 - PRO**	4
–	**HT 10/9 - PRO**	4
–	**HT 15/2R - PRO**	4
–	**HT 15/3R - PRO**	4
–	**HT 15/3 - PRO**	4
–	**HT 15/4 - PRO**	4
–	**HT 15/5 - PRO**	4
–	**HT 15/6 - PRO**	2
–	**HT 15/7 - PRO**	2
–	**HT 30/2R - PRO**	4
–	**HT 30/2 - PRO**	4
–	**HT 30/3 - PRO**	4
–	**HT 30/4 - PRO**	4
–	**HT 30/5 - PRO**	2
–	**HT 30/6 - PRO**	2
–	**HT 30/7 - PRO**	2
–	**HT 30/8 - PRO**	2

DIMENSIONS AND WEIGHT

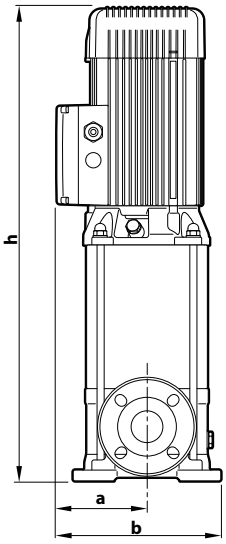

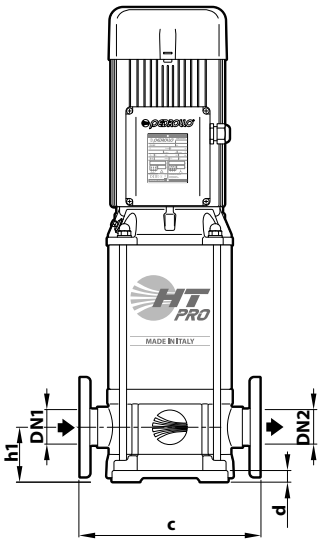

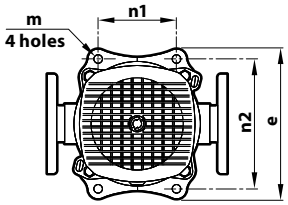

FLANGE

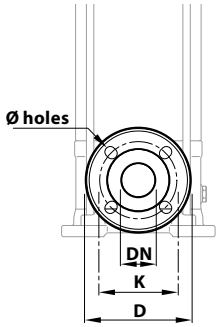

TYPE	DN mm	D mm	K mm	HOLES N°	HOLES Ø mm
HT 3 - PRO	**25**	115	85	4	14
HT 5 - PRO	**32**	140	100		18
HT 8 - PRO	**40**	150	110		
HT 10 - PRO	**40**	150	110		
HT 15 - PRO	**50**	165	125		
HT 30 - PRO	**65**	185	145		

TYPE		PORTS		N°	DIMENSIONS mm										kg	
Single-phase	**Three-phase**	**DN1**	**DN2**	STAGES	a	b	c	d	e	h	h1	n1	n2	m	1~	3~
HTm 3/4 - PRO	**HT 3/4 - PRO**	**1"**	**1"**	4	126	231	250	15	210	509	75	100	180	Ø 13	31.5	31.5
HTm 3/5 - PRO	**HT 3/5 - PRO**			5						535					31.7	31.7
HTm 3/6 - PRO	**HT 3/6 - PRO**			6						561					33.0	33.0
HTm 3/7 - PRO	**HT 3/7 - PRO**			7						607					37.9	37.9
–	**HT 3/8 - PRO**			8	151	257				685					–	45.2
–	**HT 3/9 - PRO**			9						711					–	46.2
–	**HT 3/10 - PRO**			10						737					–	47.1
HTm 5/2 - PRO	**HT 5/2 - PRO**	**1¼"**	**1¼"**	2	126	231				457					29.9	29.9
HTm 5/3 - PRO	**HT 5/3 - PRO**			3						483					30.1	30.1
HTm 5/4 - PRO	**HT 5/4 - PRO**			4						509					32.1	32.1
HTm 5/5 - PRO	**HT 5/5 - PRO**			5						555					34.5	34.5
HTm 5/6 - PRO	**HT 5/6 - PRO**			6						581					35.5	35.5
–	**HT 5/7 - PRO**			7	151	257				659					–	44.3
–	**HT 5/8 - PRO**			8						685					–	45.3
–	**HT 5/9 - PRO**			9						711					–	49.5
HTm 8/3 - PRO	**HT 8/3 - PRO**	**1½"**	**1½"**	3	126	231	280			488	80				30.6	30.6
HTm 8/4 - PRO	**HT 8/4 - PRO**			4						514					32.6	32.6
HTm 8/5 - PRO	**HT 8/5 - PRO**			5						560					36.1	36.1
HTm 8/6 - PRO	**HT 8/6 - PRO**			6						586					36.9	36.9
–	**HT 8/7 - PRO**			7	151	257				664					–	44.6
–	**HT 8/8 - PRO**			8						690					–	48.7
–	**HT 8/9 - PRO**			9						716					–	49.7
–	**HT 8/10 - PRO**			10						742					–	54.7
HTm 10/3 - PRO	**HT 10/3 - PRO**	**1½"**	**1½"**	3	126	231				488					30.7	30.7
HTm 10/4 - PRO	**HT 10/4 - PRO**			4						534					32.7	32.7
HTm 10/5 - PRO	**HT 10/5 - PRO**			5						560					36.2	36.2
–	**HT 10/6 - PRO**			6	151	257				638					–	44.5
–	**HT 10/7 - PRO**			7						664					–	44.7
–	**HT 10/8 - PRO**			8						690					–	48.8
–	**HT 10/9 - PRO**			9						716					–	49.8
–	**HT 15/2R - PRO**	**2"**	**2"**	2	151	275	300	18	247	589	90	130	215	Ø 14	–	52.0
–	**HT 15/3R - PRO**			3						633					–	52.5
–	**HT 15/3 - PRO**			3						633					–	57.0
–	**HT 15/4 - PRO**			4						677					–	63.0
–	**HT 15/5 - PRO**			5						771					–	71.0
–	**HT 15/6 - PRO**			6	181	305				900					–	115.5
–	**HT 15/7 - PRO**			7						944					–	116.0
–	**HT 30/2R - PRO**	**2½"**	**2½"**	2	151	275	320			604	105				–	53.5
–	**HT 30/2 - PRO**			2						604					–	56.5
–	**HT 30/3 - PRO**			3						648					–	61.5
–	**HT 30/4 - PRO**			4						742					–	70.0
–	**HT 30/5 - PRO**			5	181	305				871					–	123.5
–	**HT 30/6 - PRO**			6						915					–	124.0
–	**HT 30/7 - PRO**			7						959					–	136.5
–	**HT 30/8 - PRO**			8						1003					–	137.0

MATERIALS AND COMPONENTS

1	**Pump body**	Stainless steel **AISI 304**,provided with ISO 228/1 threaded ports
2	**Cover**	Stainless steel **AISI 304**
3	**External sleeve**	Stainless steel **AISI 304**
4	**Impellers**	Stainless steel **AISI 304**
5	**Diffusers**	Stainless steel **AISI 304**

6 Mechanical seal

Water pump	Seal	Shaft	Materials
HT 3 - 5 - 8 - 10 PRO	**FN-18**	Ø 18 mm	Graphite / Ceramic / NBR
HT 15 - 30 PRO	**FN-KU-24** ISO 3069 EN 12756	Ø 24 mm	Graphite / Ceramic / NBR

7	**Shaft**	Stainless steel **AISI 316L**

8 Electric motor

– **HTm - PRO**: single-phase 230 V - 50 Hz with capacitor and winding integrated thermal motor protection

– **HT - PRO**: three-phase
230/400 V - 50 Hz up to 4 kW
400/690 V - 50 Hz from 5.5 to 15 kW

※ Pumps are equipped with high-efficiency motors (IEC 60034-30-1)
class **IE2** for single-phase models
class **IE3** for three-phase models

Continuous running duty **S1**

FUTURE JET®

The self-priming pump of the future!

Clean water

Domestic use

Civil use

※ **Reduction of energy consumption by up to 50%**

From an evolution of the classic JET concept, a SUPER JET was born.

※ **High hydraulic efficiency**

※ **Better consumption/performance ratio**

※ **Reducing turbulence**

※ **Noise reduction**

PERFORMANCE RANGE

- Flow rate up to **120 l/min** (7.2 m³/h)
- Head up to **72 m**

FUTURE JET

Developed by our innovative research and development team, this pump revolutionizes the classic self-priming design.

With an international registered patent, the **FUTURE JET** not only matches the pressure of a traditional JET pump, it surpasses it. Moreover, it doubles the flow rate while reducing energy consumption by up to 50%.

INSTALLATION AND USE

FUTURE JET self-priming pumps are designed to draw water and liquids that contain air.

They are reliable and easy to operate. They are a favorite for domestic use, particularly effective for water distribution with small to medium-sized pressure tanks and suitable for irrigation.

APPLICATION LIMITS

- Manometric suction head up to **9 m** (HS)
- Liquid temperature between **-10 °C** and **+40 °C**
- Ambient temperature up to **+40 °C**
- Maximum working pressure:
  - **6 bar** for FUTURE JET 1
  - **7 bar** for FUTURE JET 2

AVAILABLE UPON REQUEST

※ Technopolymer impeller (cost-effective version)

※ Different voltage requirements 60 Hz frequency

PATENTS - TRADE MARKS - MODELS

- FUTURE JET® Registered Trade mark No. 018198453
- Registered Community Model No. 002218610
- European Patent No. 1 510 696
- Patent No. PCT/IT2019/050168

CURVES AND PERFORMANCE DATA – HS=0 m

50 Hz

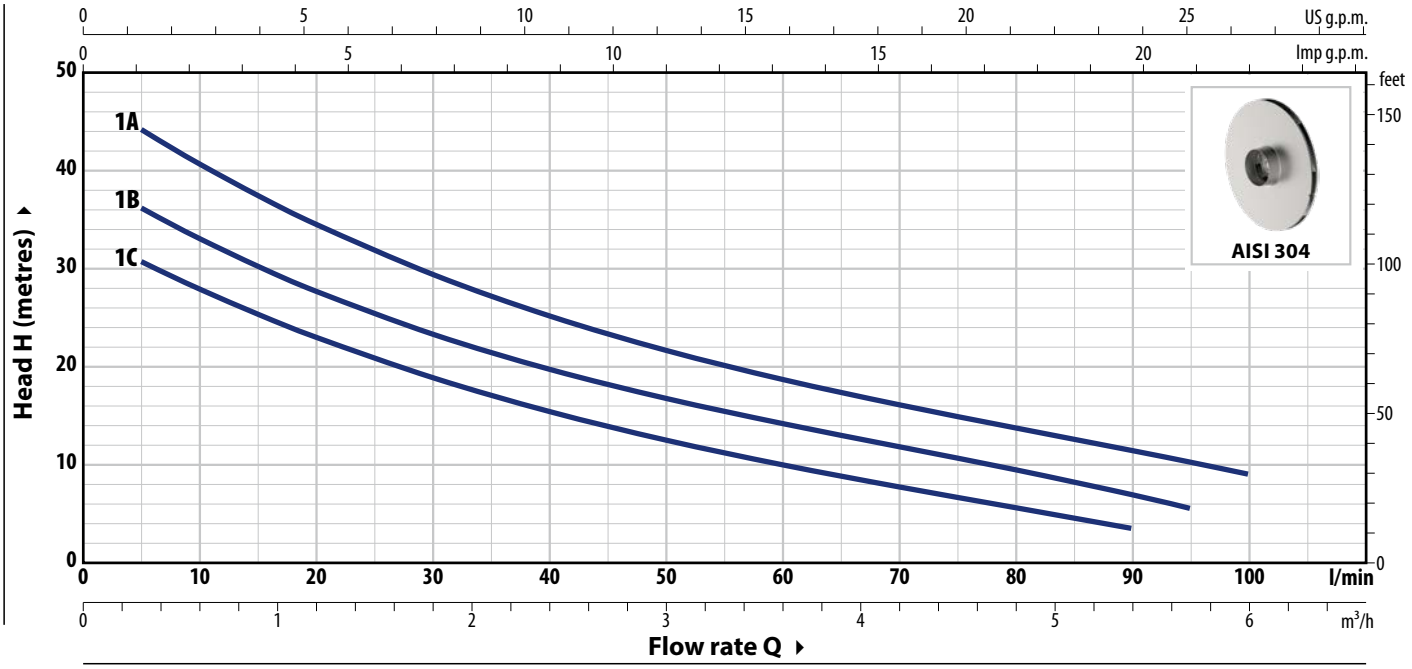

TYPE		POWER (P2)				Q	m³/h	0	0.3	0.6	1.2	2.4	3.6	4.8	5.4	5.7	6.0
Single-phase	**Three-phase**	**kW**	**HP**	**1~**	**3~**		l/min	**0**	**5**	**10**	**20**	**40**	**60**	**80**	**90**	**95**	**100**
FUTURE JETm 1C	**FUTURE JET 1C**	0.37	0.50					33.5	30.5	28	23	15.4	10	6	3.5		
FUTURE JETm 1B	**FUTURE JET 1B**	0.48	0.65	**IE2**	**IE3**	**H** metres		40	36	33	27.6	19.7	14.2	9.5	7	5.5	
FUTURE JETm 1A	**FUTURE JET 1A**	0.55	0.75					48	44	40.6	34.5	25.2	18.7	13.7	11.4	10.2	9

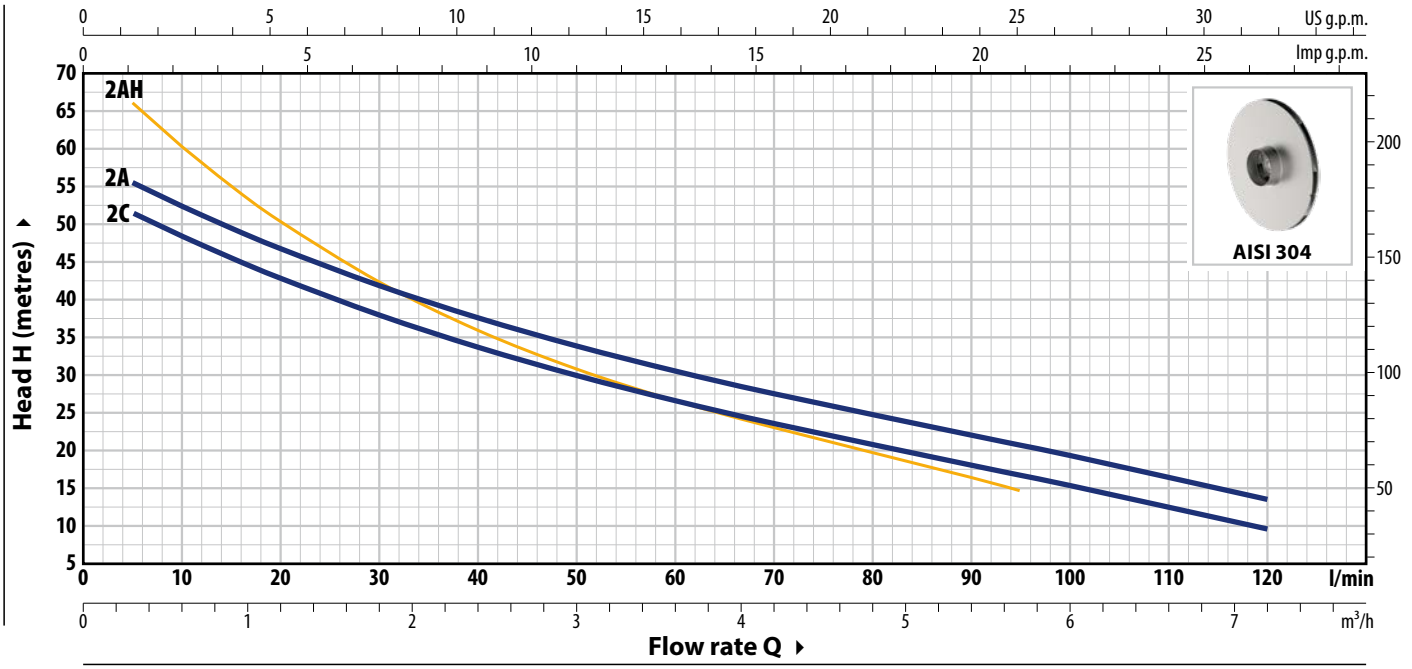

TYPE		POWER (P2)				Q	m³/h	0	0.3	0.6	1.2	2.4	3.6	4.8	5.4	5.7	6.0	7.2
Single-phase	**Three-phase**	**kW**	**HP**	**1~**	**3~**		l/min	**0**	**5**	**10**	**20**	**40**	**60**	**80**	**90**	**95**	**100**	**120**
FUTURE JETm 2C	**FUTURE JET 2C**	0.75	1					55	52	49	43	34	27	20.5	18.3	17	15.5	10
FUTURE JETm 2A	**FUTURE JET 2A**	0.90	1.25	**IE2**	**IE3**	**H** metres		59	56	53	47	38	32	25	22.3	21	19.5	13.7
FUTURE JETm 2AH	**FUTURE JET 2AH**	0.90	1.25					72	66	60	50.5	36	27	20	16.8	15		

Q = Flow rate **H** = Total manometric head **HS** = Suction height

Performance curves comply with EN ISO 9906 Grade 3B tolerance limits.

ABSORPTION

TYPE	VOLTAGE
Single-phase	**230 V**
FUTURE JETm 1C	2.6 A
FUTURE JETm 1B	3.2 A
FUTURE JETm 1A	4.0 A
FUTURE JETm 2C	5.8 A
FUTURE JETm 2A	6.6 A
FUTURE JETm 2AH	6.6 A

TYPE	VOLTAGE	
Three-phase	**230 V - Δ**	**400 V - ⅄**
FUTURE JET 1C	1.7 A	1.0 A
FUTURE JET 1B	2.1 A	1.2 A
FUTURE JET 1A	2.8 A	1.6 A
FUTURE JET 2C	4.7 A	2.7 A
FUTURE JET 2A	5.2 A	3.0 A
FUTURE JET 2AH	5.2 A	3.0 A

DIMENSIONS AND WEIGHT

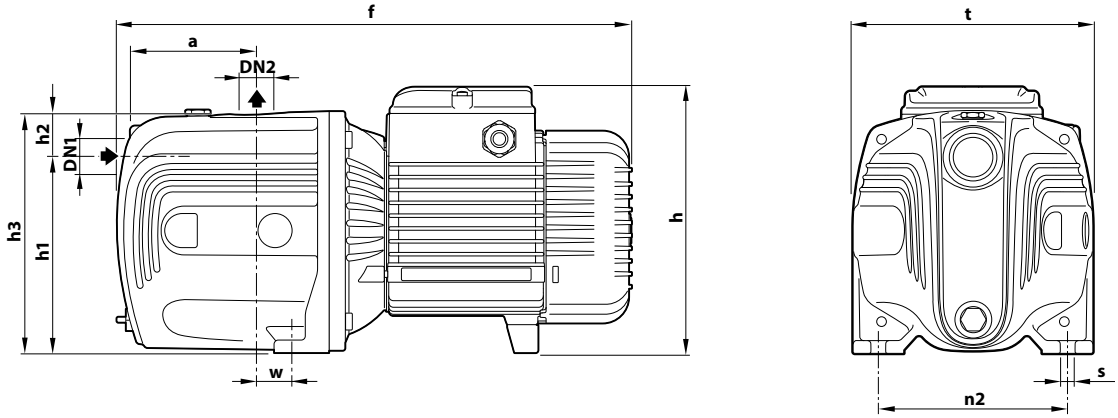

TYPE		PORTS		DIMENSIONS mm										kg	
Single-phase	**Three-phase**	**DN1**	**DN2**	a	f	h	h1	h2	h3	t	n2	w	s	1~	3~
FUTURE JETm 1C	**FUTURE JET 1C**	**1"**	**1"**	94	357	173	127	35	162	158	124	24	10	9.7	9.7
FUTURE JETm 1B	**FUTURE JET 1B**													9.8	9.8
FUTURE JETm 1A	**FUTURE JET 1A**													10.7	10.0
FUTURE JETm 2C	**FUTURE JET 2C**			96	391	201 *	147	33	180	180	142	22	10	14.5	14.5
FUTURE JETm 2A	**FUTURE JET 2A**													15.5	14.5
FUTURE JETm 2AH	**FUTURE JET 2AH**													15.5	14.5

(*) h=220 mm for single-phase 110 V versions

PALLET CAPACITY

TYPE		NO. OF PUMPS
Single-phase	**Three-phase**	
FUTURE JETm 1C	**FUTURE JET 1C**	98
FUTURE JETm 1B	**FUTURE JET 1B**	98
FUTURE JETm 1A	**FUTURE JET 1A**	98
FUTURE JETm 2C	**FUTURE JET 2C**	72
FUTURE JETm 2A	**FUTURE JET 2A**	72
FUTURE JETm 2AH	**FUTURE JET 2AH**	72

MATERIALS AND COMPONENTS

1	**Pump body**	FUTURE JET 1: cast iron with cataphoretic treatment, provided with ISO 228/1 threaded ports FUTURE JET 2: cast iron with ISO 228/1 threaded ports start of production with new design 07.2024
2	**Cover**	Stainless steel **AISI 304**
3	**Ejector unit**	Noryl™
4	**Impeller**	Stainless steel **AISI 304**
5	**Mechanical seal**	
6	**Motor shaft**	Stainless steel **AISI 431**
7	**Electric motor**	**FUTURE JETm**: single-phase 230 V - 50 Hz with winding integrated thermal motor protection **FUTURE JET**: three-phase 230/400 V - 50 Hz ※ Pumps are equipped with high-efficiency motors (IEC 60034-30-1) class **IE2** for single-phase models class **IE3** for three-phase models – Continuous running duty **S1** – Insulation: CLASS F – Protection rating: IP X4

Water pump	Seal	Shaft	Materials
FUTURE JET 1	**AR-12**	Ø 12 mm	Ceramic / Graphite / NBR
FUTURE JET 2	**AR-14**	Ø 14 mm	Ceramic / Graphite / NBR

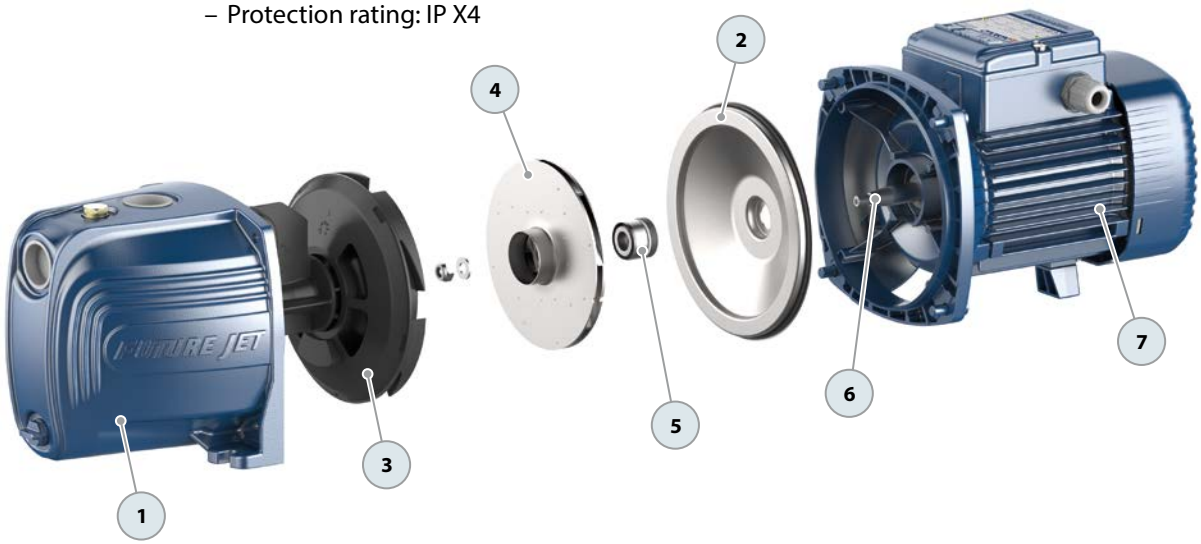

EXAMPLES OF INSTALLATION

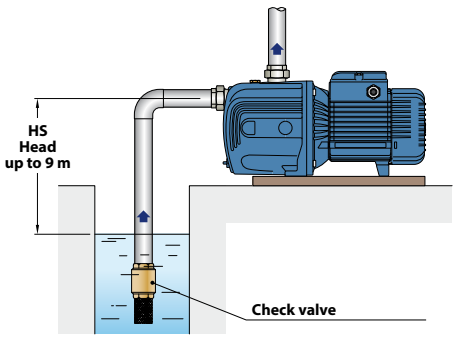

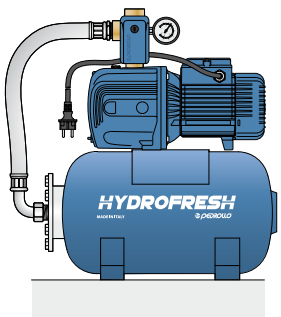

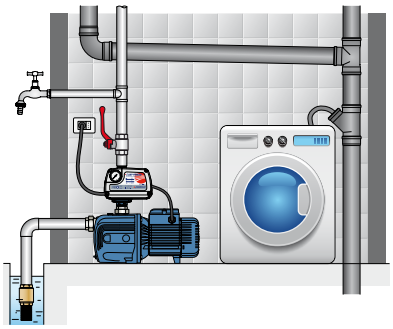

JET "self-priming pumps

Clean water

Domestic use

Civil use

PERFORMANCE RANGE

- Flow rate up to **70 l/min** (4.2 m³/h)
- Head up to **58 m**

INSTALLATION AND USE

JSW self-priming pumps are designed to draw water and liquids that contain air.

They are reliable and easy to operate. They are a favorite for domestic use, particularly effective for water distribution with small to medium-sized pressure tanks and suitable for irrigation..

APPLICATION LIMITS

- Manometric suction head up to **9 m** (HS)
- Liquid temperature between **-10 °C** and **+40 °C**
- Ambient temperature up to **+40 °C**
- Maximum working pressure **6 bar**

AVAILABLE UPON REQUEST

※ Technopolymer impeller (JSW X) (cost-effective version)

※ Different voltage requirements 60 Hz frequency

PATENTS - TRADE MARKS - MODELS

- **JSW**® Registered trademark No. 013073135
- Registered Community Model No. 002218610
- European Patent No. 1 510 696

EXAMPLES OF INSTALLATION

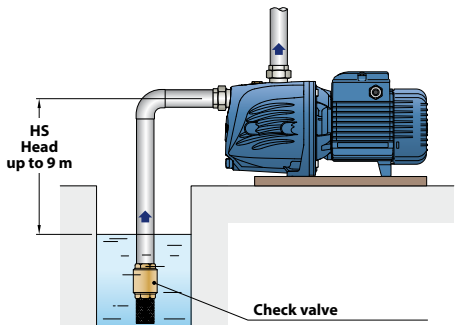

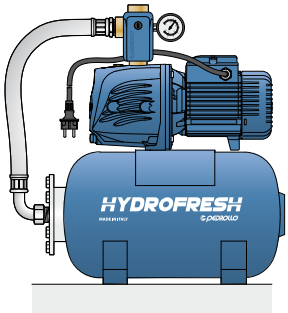

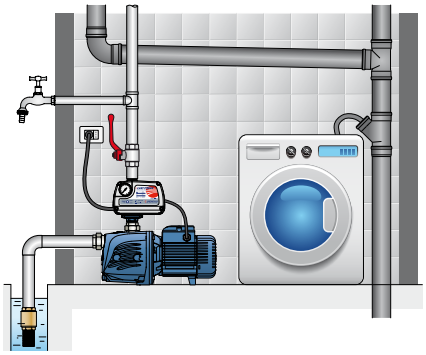

CURVES AND PERFORMANCE DATA – HS=0 m

50 Hz

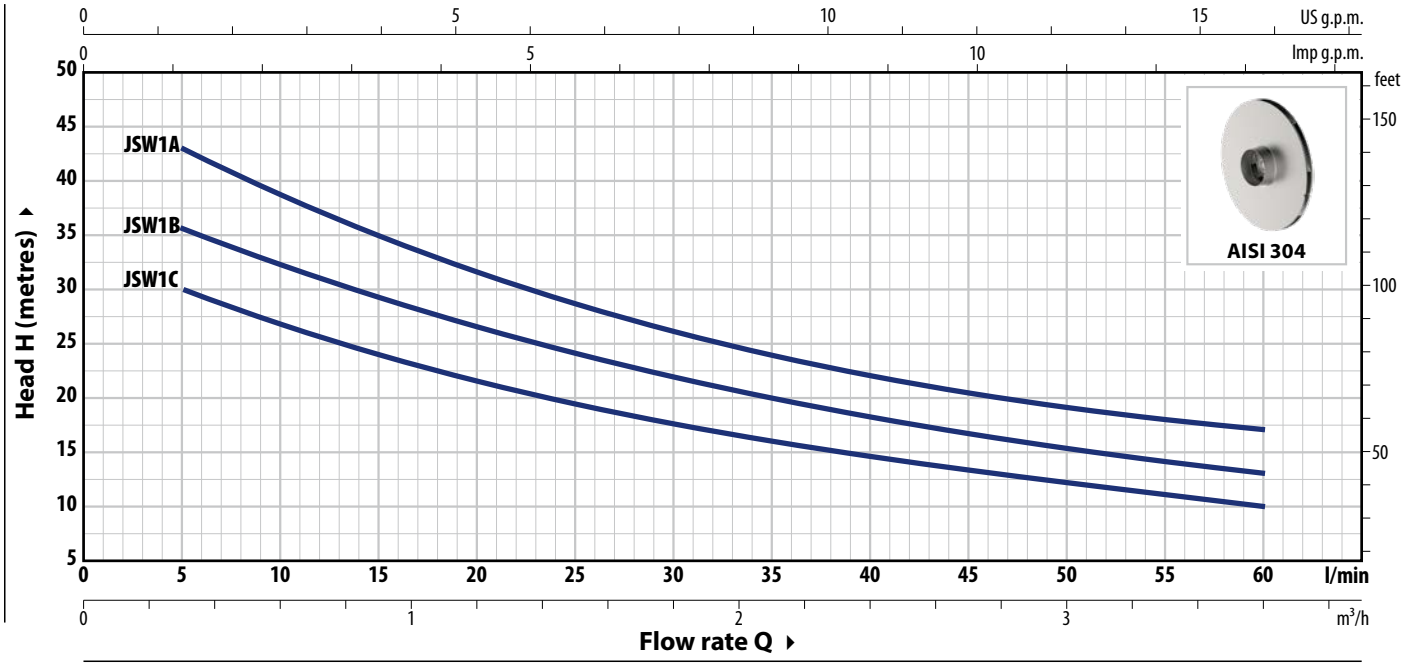

TYPE Single-ph.	TYPE Three-ph.	POWER (P2) kW	POWER (P2) HP	1~	3~	Q m³/h / l/min	0 / 0	0.3 / 5	0.6 / 10	1.2 / 20	1.5 / 25	1.8 / 30	2.4 / 40	2.7 / 45	3.0 / 50	3.6 / 60
JSWm 1C	JSW 1C	0.37	0.50	IE2	IE3	H metres	34	30	27	21.7	19.5	17.7	14.7	13.4	12.2	10
JSWm 1B	JSW 1B	0.48	0.65				39.5	35.5	32.4	26.6	24.2	22	18.3	16.7	15.3	13
JSWm 1A	JSW 1A	0.55	0.75				48	43	39	31.5	28.5	26	22	20.5	19	17

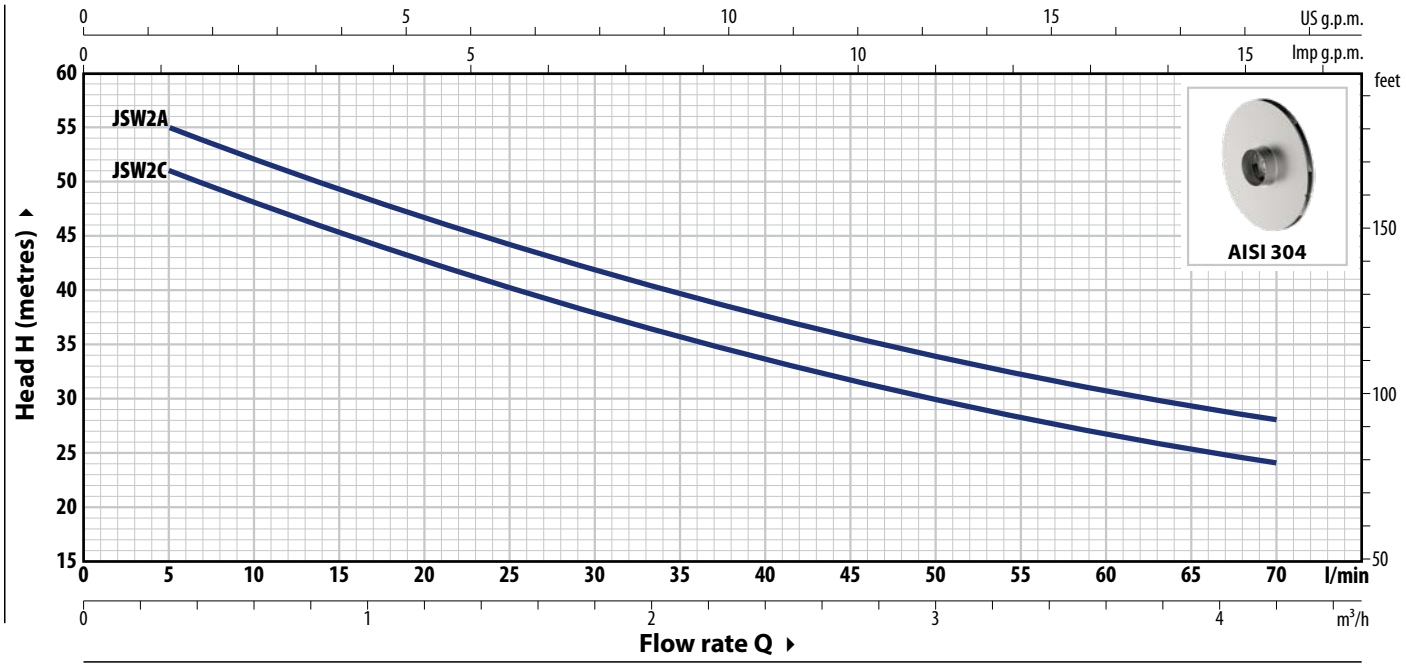

TYPE Single-ph.	TYPE Three-ph.	POWER (P2) kW	POWER (P2) HP	1~	3~	Q m³/h / l/min	0 / 0	0.3 / 5	0.6 / 10	1.2 / 20	1.8 / 30	2.4 / 40	2.7 / 45	3.0 / 50	3.6 / 60	4.2 / 70
JSWm 2C	JSW 2C	0.75	1	IE2	IE3	H metres	54	51	48	42.5	38	33.5	31.5	30	26.5	24
JSWm 2A	JSW 2A	0.90	1.25				58	55	52	46.5	42	37.5	35.5	34	31	28

Q = Flow rate **H** = Total manometric head **HS** = Suction height

Performance curves comply with EN ISO 9906 Grade 3B tolerance limits.

ABSORPTION

TYPE	VOLTAGE
Single-ph.	**230 V**
JSWm 1C	2.6 A
JSWm 1B	3.2 A
JSWm 1A	3.6 A
JSWm 2C	5.8 A
JSWm 2A	6.0 A

TYPE	VOLTAGE	
Three-ph.	**230 V - Δ**	**400 V - ⅄**
JSW 1C	1.7 A	1.0 A
JSW 1B	2.1 A	1.2 A
JSW 1A	2.8 A	1.6 A
JSW 2C	4.7 A	2.7 A
JSW 2A	5.2 A	3.0 A

DIMENSIONS AND WEIGHT

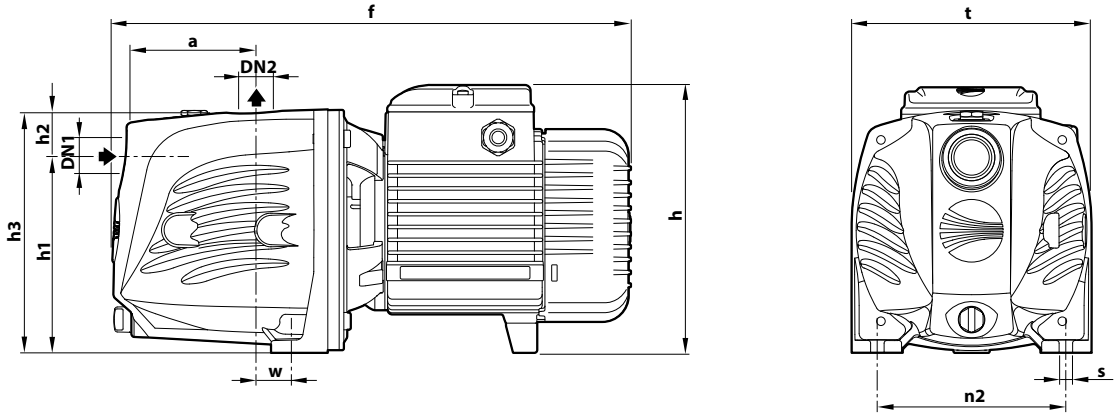

TYPE		PORTS		DIMENSIONS mm										kg	
Single-ph.	**Three- ph.**	**DN1**	**DN2**	a	f	h	h1	h2	h3	t	n2	w	s	1~	3~
JSWm 1C	**JSW 1C**	**1"**	**1"**	94	357	171	127	35	162	158	124	24	10	9.7	9.7
JSWm 1B	**JSW 1B**													9.8	9.8
JSWm 1A	**JSW 1A**													10.7	10.0
JSWm 2C	**JSW 2C**	**1"**	**1"**	96	389	200 *	147	33	180	180	142	22	10	14.0	14.0
JSWm 2A	**JSW 2A**													15.0	14.0

(*) h=220 mm for single-phase 110 V versions

PALLET CAPACITY

TYPE		NO. OF PUMPS
Single-ph.	**Three-ph.**	
JSWm 1C	**JSW 1C**	98
JSWm 1B	**JSW 1B**	98
JSWm 1A	**JSW 1A**	98
JSWm 2C	**JSW 2C**	72
JSWm 2A	**JSW 2A**	72

MATERIALS AND COMPONENTS

1	**Pump body**	Cast iron with cataphoretic treatment, provided with ISO 228/1 threaded ports (for JSW 1) Cast iron with ISO 228/1 threaded ports (for JSW 2)
2	**Cover**	Stainless steel **AISI 304**
3	**Ejector unit**	Noryl™
4	**Impeller**	Stainless steel **AISI 304**
5	**Mechanical seal**	

Water pump	Seal	Shaft	Materials
JSW1	**AR-12**	Ø 12 mm	Ceramic / Graphite / NBR
JSW2	**AR-14**	Ø 14 mm	Ceramic / Graphite / NBR

6	**Motor shaft**	Stainless steel **AISI 431**
7	**Electric motor**	**JSWm**: single-phase 230 V - 50 Hz with winding integrated thermal motor protection **JSW**: three-phase 230/400 V - 50 Hz ※ Pumps are equipped with high-efficiency motors (IEC 60034-30-1) class **IE2** for single-phase models class **IE3** for three-phase models – Continuous running duty **S1** – Insulation: CLASS F – Protection rating: IP X4

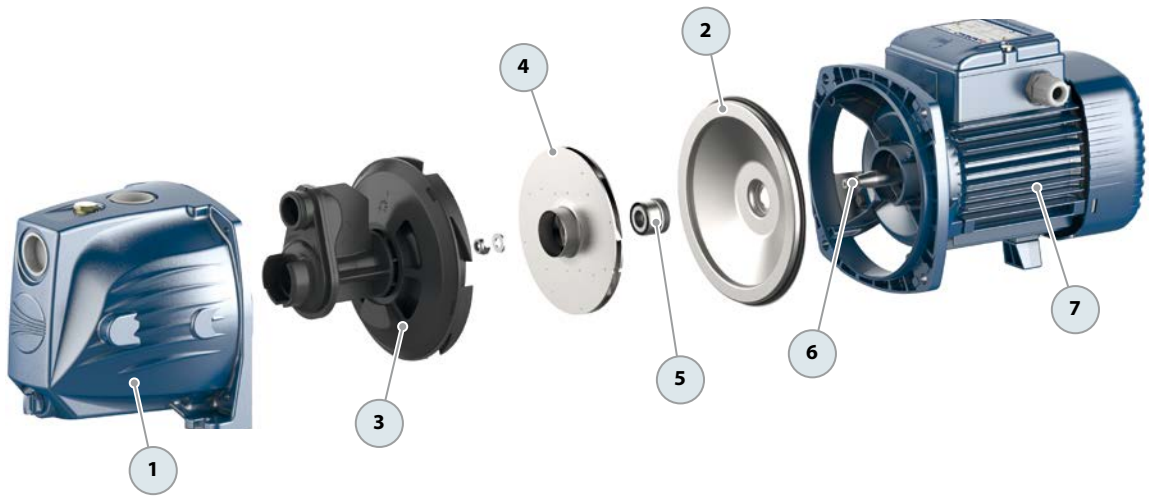

JET "self-priming pumps

Clean water
Domestic use
Civil use
Industrial use

PERFORMANCE RANGE

- Flow rate up to **160 l/min** (9.6 m³/h)
- Head up to **97 m**

INSTALLATION AND USE

JSW self-priming pumps are designed to draw water and liquids that contain air.

They are reliable and easy to operate. They are a favorite for domestic use, particularly effective for water distribution with small to medium-sized pressure tanks and suitable for irrigation.

APPLICATION LIMITS

- Manometric suction head up to **9 m** (HS)
- Liquid temperature between **-10 °C** and **+40 °C**
- Ambient temperature up to **+40 °C**
- Maximum working pressure **10 bar**

AVAILABLE UPON REQUEST

※ IPX5 protection
※ Different voltage requirements 60 Hz frequency

PATENTS - TRADE MARKS - MODELS

- JSW®Registered trademark No. 013073135
- Registered Community Model No. 002218610

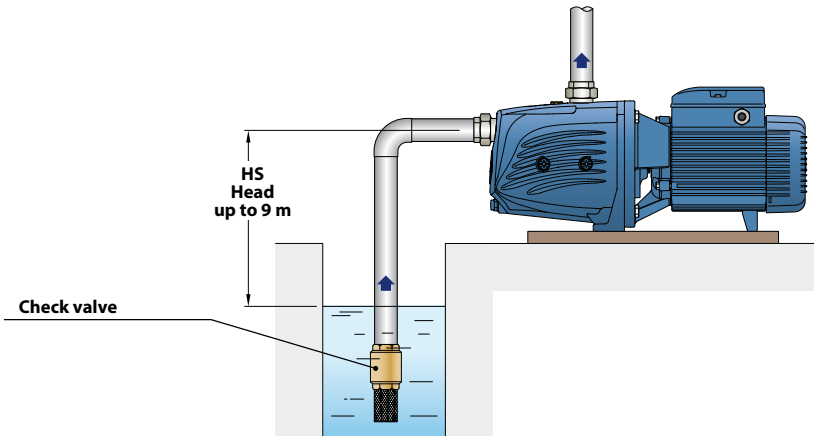

CURVES AND PERFORMANCE DATA – HS=0 m

50 Hz

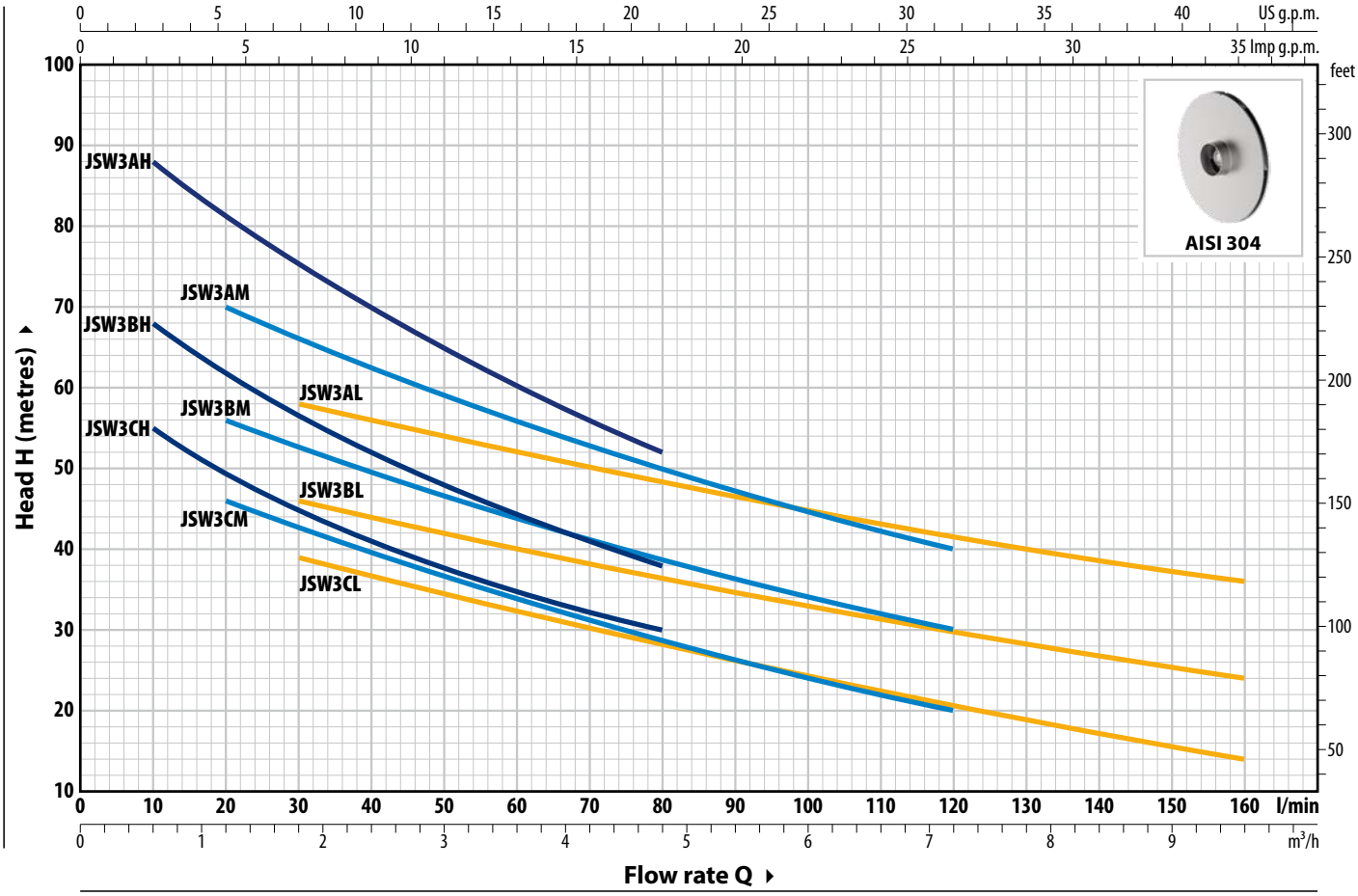

TYPE		POWER (P2)				Q	m³/h	0	0.6	1.2	1.8	2.4	3.0	3.6	4.2	4.8	6.0	7.2	8.4	9.6
Single-ph.	**Three-ph.**	**kW**	**HP**	**1~**	**3~**		l/min	**0**	**10**	**20**	**30**	**40**	**50**	**60**	**70**	**80**	**100**	**120**	**140**	**160**
JSWm 3CH	**JSW 3CH**	1.1	1.5					62	55	49	45	41	38	35	32	30				
JSWm 3BH	**JSW 3BH**	1.5	2					73	68	62	56.5	52	48	44	41	38				
JSWm 3AH	**JSW 3AH**	2.2	3					97	88	81	75	70	65	60.5	56	52				
JSWm 3CM	**JSW 3CM**	1.1	1.5					54	–	46	43	39.5	36.5	34	31	28.5	24	20		
JSWm 3BM	**JSW 3BM**	1.5	2	**IE2**	**IE3**	**H** metres		63	–	56	53	49.5	47.5	44	41	39	34	30		
JSWm 3AM	**JSW 3AM**	2.2	3					78	–	70	66	62	59	56	53	50	45	40		
JSWm 3CL	**JSW 3CL**	1.1	1.5					44	–	–	39	37	34	32	30	28	24	21	17	14
JSWm 3BL	**JSW 3BL**	1.5	2					51	–	–	46	44	42	40	38	36	33	30	27	24
JSWm 3AL	**JSW 3AL**	2.2	3					64	–	–	58	56	54	52	50	48	45	41.5	38.5	36

Q = Flow rate **H** = Total manometric head **HS** = Suction height

Performance curves comply with EN ISO 9906 Grade 3B tolerance limits.

ABSORPTION

TYPE	VOLTAGE
Single-phase	**230 V**
JSWm 3CH	8.1 A
JSWm 3BH	9.5 A
JSWm 3AH	12.7 A
JSWm 3CM	8.1 A
JSWm 3BM	9.7 A
JSWm 3AM	13.0 A
JSWm 3CL	8.1 A
JSWm 3BL	10.1 A
JSWm 3AL	13.6 A

TYPE	VOLTAGE	
Three-phase	**230 V - Δ**	**400 V - ⅄**
JSW 3CH	5.2 A	3.0 A
JSW 3BH	6.1 A	3.5 A
JSW 3AH	8.8 A	5.1 A
JSW 3CM	5.2 A	3.0 A
JSW 3BM	6.1 A	3.5 A
JSW 3AM	9.0 A	5.2 A
JSW 3CL	5.2 A	3.0 A
JSW 3BL	6.4 A	3.7 A
JSW 3AL	9.3 A	5.4 A

DIMENSIONS AND WEIGHT

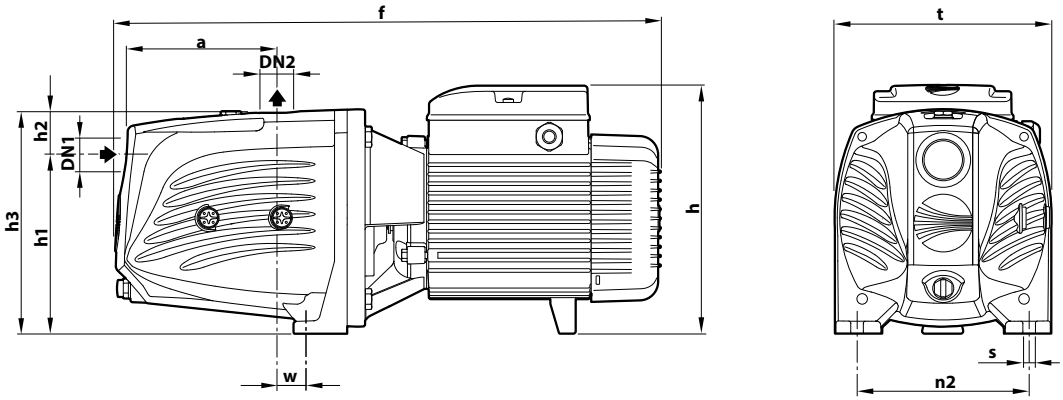

TYPE		PORTS		DIMENSIONS mm										kg	
Single-phase	**Three-phase**	**DN1**	**DN2**	a	f	h	h1	h2	h3	t	n2	w	s	1~	3~
JSWm 3CH	**JSW 3CH**				522									24.5	24.4
JSWm 3BH	**JSW 3BH**													25.6	25.7
JSWm 3AH	**JSW 3AH**				542									28.4	28.4
JSWm 3CM	**JSW 3CM**				522									24.6	24.4
JSWm 3BM	**JSW 3BM**	**1¼"**	**1"**	143		240	165	39	204	206	164	30	11	25.7	25.7
JSWm 3AM	**JSW 3AM**				542									28.4	28.4
JSWm 3CL	**JSW 3CL**				522									24.5	24.4
JSWm 3BL	**JSW 3BL**													25.8	25.7
JSWm 3AL	**JSW 3AL**				542									28.4	28.4

PALLET CAPACITY

TYPE		NO. OF PUMPS
Single-phase	**Three-phase**	
JSWm 3CH	**JSW 3CH**	35
JSWm 3BH	**JSW 3BH**	35
JSWm 3AH	**JSW 3AH**	35
JSWm 3CM	**JSW 3CM**	35
JSWm 3BM	**JSW 3BM**	35
JSWm 3AM	**JSW 3AM**	35
JSWm 3CL	**JSW 3CL**	35
JSWm 3BL	**JSW 3BL**	35
JSWm 3AL	**JSW 3AL**	35

MATERIALS AND COMPONENTS

1	**Pump body**	Cast iron with cataphoresis treatment, provided with ISO 228/1 threaded ports
2	**Cover**	Cast iron with cataphoresis treatment
3	**Ejector unit**	Noryl™
4	**Impeller**	Stainless steel **AISI 304**
5	**Mechanical seal**	

Seal	Shaft	Materials
FN-18	Ø 18 mm	Graphite / Ceramic / NBR

6	**Motor shaft**	Stainless steel **AISI 431**
7	**Electric motor**	**JSWm**: single-phase 230 V - 50 Hz with winding integrated thermal motor protection **JSW**: three-phase 230/400 V - 50 Hz ※ Pumps are equipped with high-efficiency motors (IEC 60034-30-1) class **IE2** for single-phase models class **IE3** for three-phase models – Continuous running duty **S1** – Insulation: CLASS F – Protection rating: IP X4

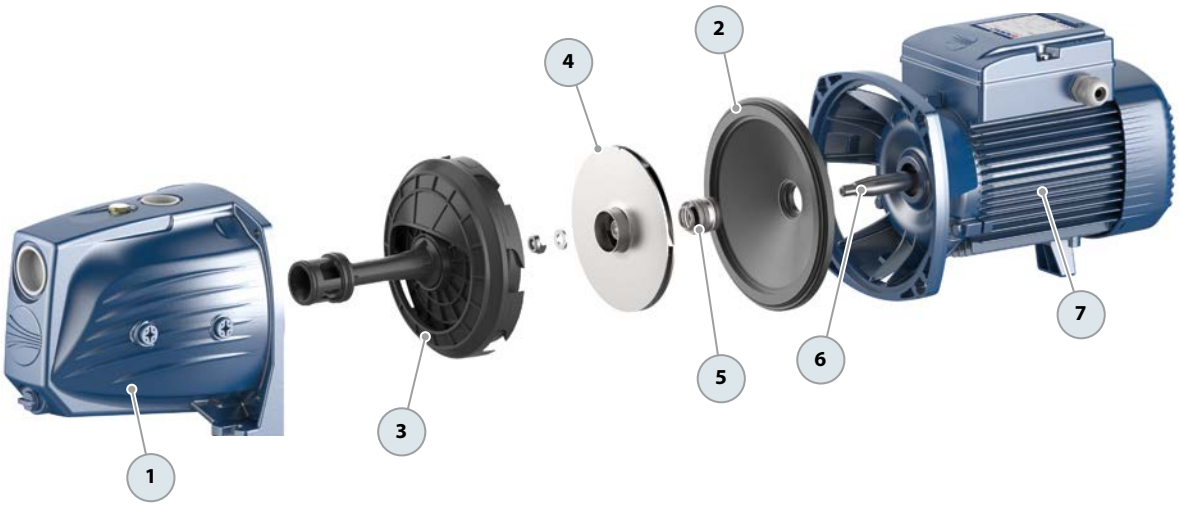

FUTURE JET®·ST

The self-priming pump of the future!

Clean water

Domestic use

Civil use

※ **Reduction of energy consumption by up to 50%**

From an evolution of the classic JET pump concept, a SUPER JET was born.

※ **Stainless steel pump body and impeller**

※ **Better consumption/performance ratio**

※ **High hydraulic efficiency**

※ **Noise reduction**

PERFORMANCE RANGE

- Flow rate up to **120 l/min** (7.2 m³/h)
- Head up to **59 m**

FUTURE JET-ST

Developed by our innovative research and development team, this pump revolutionizes the classic self-priming design.
With an international registered patent, the **FUTURE JET-ST** not only matches the pressure of a traditional JET pump, it surpasses it. Moreover, it doubles the flow rate while reducing energy consumption by up to 50%.

INSTALLATION AND USE

FUTURE JET-ST self-priming pumps are designed to draw water and liquids that contain air.

They are reliable and easy to operate. They are a favorite for domestic use, particularly effective for water distribution with small to medium-sized pressure tanks and suitable for irrigation.

APPLICATION LIMITS

- Manometric suction head up to **9 m** (HS)
- Liquid temperature between **-10 °C** and **+40 °C**
- Ambient temperature up to **+40 °C**
- Maximum working pressure **6 bar**

AVAILABLE UPON REQUEST

※ Technopolymer impeller (cost-effective version)
※ Different voltage requirements 60 Hz frequency

PATENTS - TRADE MARKS - MODELS

- FUTURE JET® Registered Trade mark No. 018198453
- European Patent No. 1 510 696
- Patent No. PCT/IT2019/050168

CURVES AND PERFORMANCE DATA – HS=0 m

50 Hz

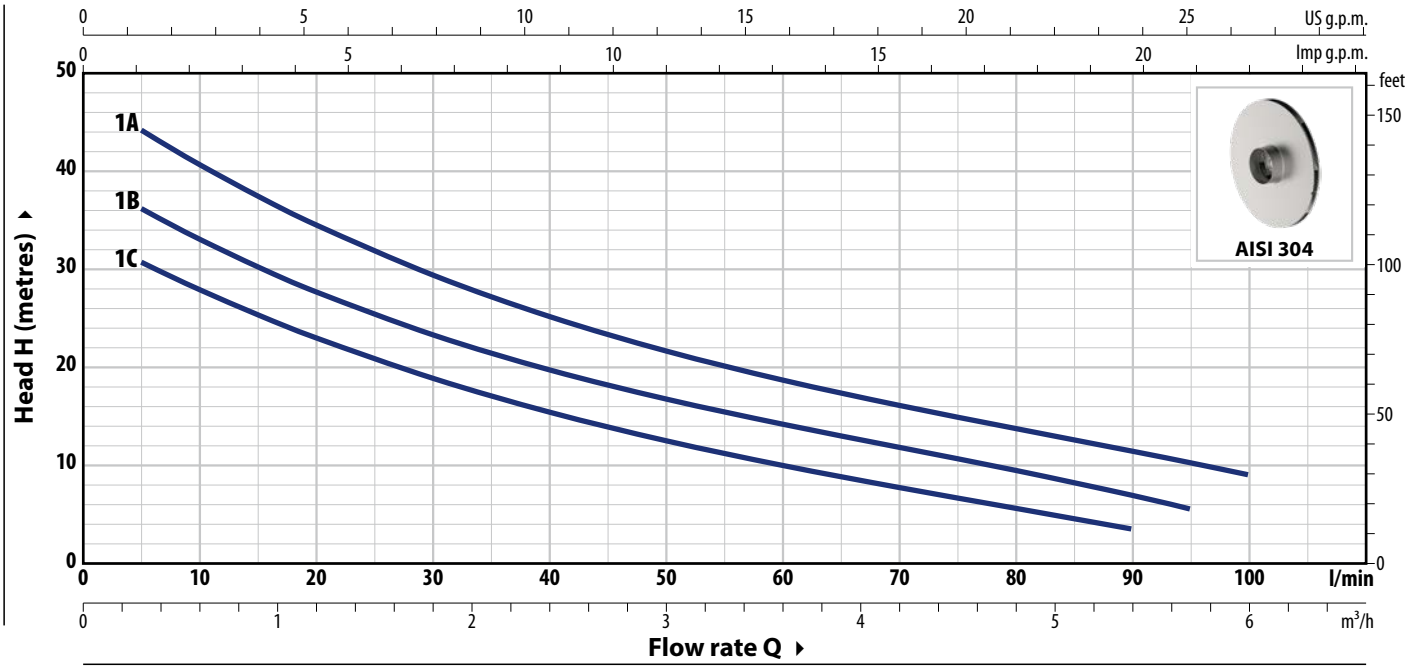

TYPE		POWER (P2)				Q m³/h	0	0.3	0.6	1.2	2.4	3.6	4.8	5.4	5.7	6.0
Single-phase	**Three-phase**	**kW**	**HP**	**1~**	**3~**	Q l/min	**0**	**5**	**10**	**20**	**40**	**60**	**80**	**90**	**95**	**100**
FUTURE JETm 1C-ST	**FUTURE JET 1C-ST**	0.37	0.50				33.5	30.5	28	23	15.4	10	6	3.5		
FUTURE JETm 1B-ST	**FUTURE JET 1B-ST**	0.48	0.65	**IE2**	**IE3**	**H** metres	40	36	33	27.6	19.7	14.2	9.5	7	5.5	
FUTURE JETm 1A-ST	**FUTURE JET 1A-ST**	0.55	0.75				48	44	40.6	34.5	25.2	18.7	13.7	11.4	10.2	9

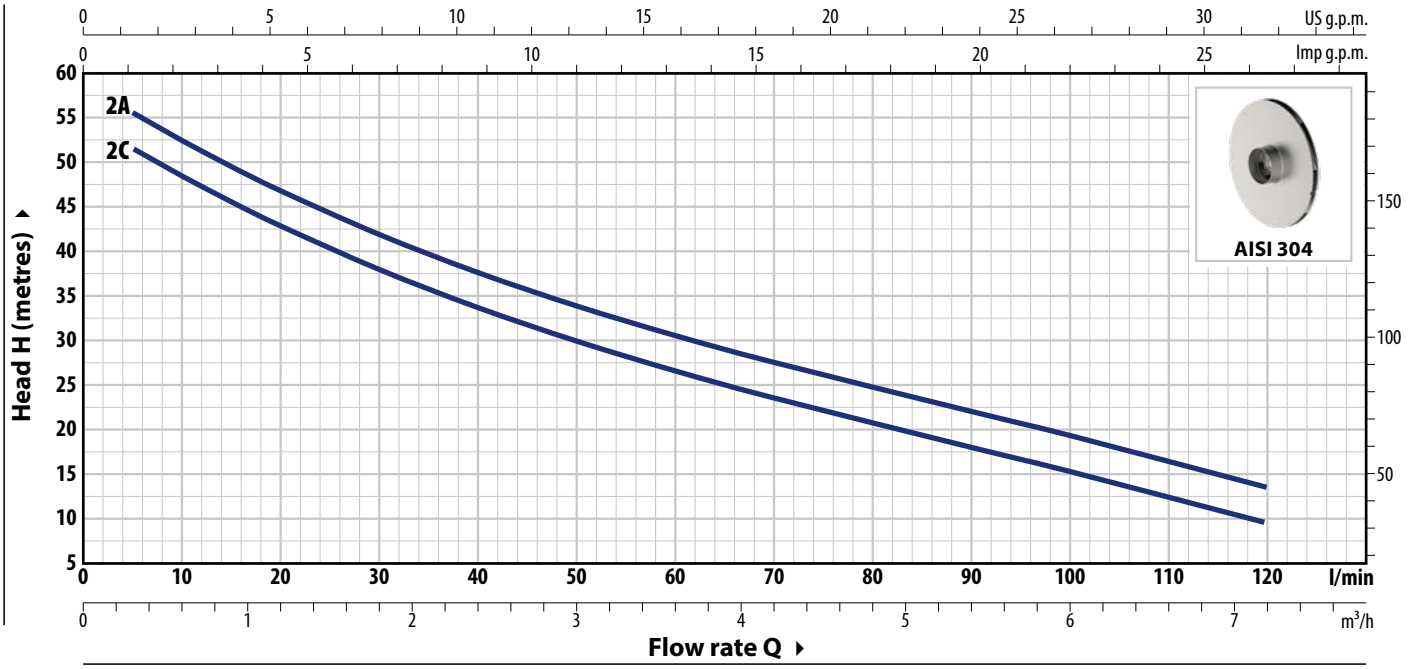

TYPE		POWER (P2)				Q m³/h	0	0.3	0.6	1.2	2.4	3.6	4.8	5.4	5.7	6.0	7.2
Single-phase	**Three-phase**	**kW**	**HP**	**1~**	**3~**	Q l/min	**0**	**5**	**10**	**20**	**40**	**60**	**80**	**90**	**95**	**100**	**120**
FUTURE JETm 2C-ST	**FUTURE JET 2C-ST**	0.75	1				55	52	49	43	34	27	20.5	18.3	17	15.5	10
FUTURE JETm 2A-ST	**FUTURE JET 2A-ST**	0.90	1.25	**IE2**	**IE3**	**H** metres	59	56	53	47	38	32	25	22.3	21	19.5	13.7

Q = Flow rate **H** = Total manometric head **HS** = Suction height

Performance curves comply with EN ISO 9906 Grade 3B tolerance limits.

ABSORPTION

TYPE **Single-phase**	VOLTAGE **230 V**
FUTURE JETm 1C-ST	2.6 A
FUTURE JETm 1B-ST	3.2 A
FUTURE JETm 1A-ST	4.0 A
FUTURE JETm 2C-ST	5.8 A
FUTURE JETm 2A-ST	6.6 A

TYPE	VOLTAGE	
Three-phase	**230 V - Δ**	**400 V - ⅄**
FUTURE JET 1C-ST	1.7 A	1.0 A
FUTURE JET 1B-ST	2.1 A	1.2 A
FUTURE JET 1A-ST	2.8 A	1.6 A
FUTURE JET 2C-ST	4.7 A	2.7 A
FUTURE JET 2A-ST	5.2 A	3.0 A

DIMENSIONS AND WEIGHT

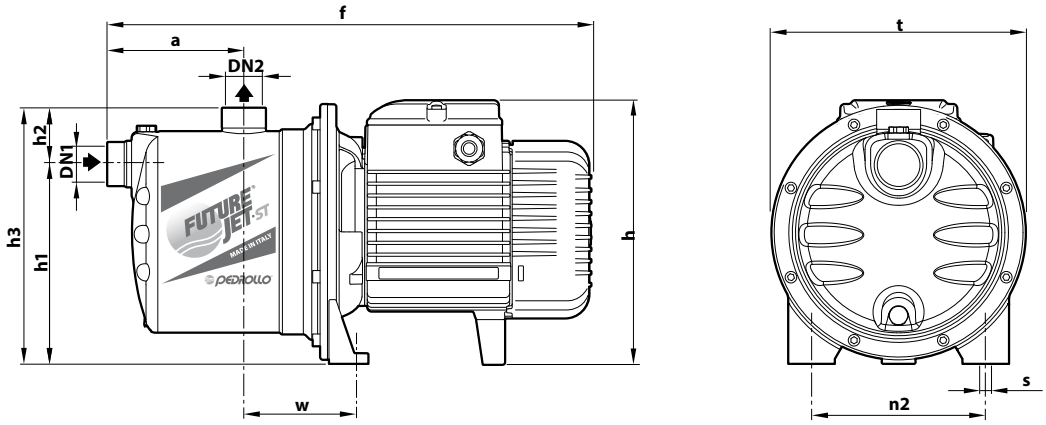

TYPE		PORTS		DIMENSIONS mm										kg	
Single-phase	**Three-phase**	**DN1**	**DN2**	a	f	h	h1	h2	h3	t	n2	w	s	1~	3~
FUTURE JETm 1C-ST	**FUTURE JET 1C-ST**													7.1	7.1
FUTURE JETm 1B-ST	**FUTURE JET 1B-ST**	**1"**	**1"**	113	367	183	132	51	183	182	120	87	9	7.1	7.1
FUTURE JETm 1A-ST	**FUTURE JET 1A-ST**													7.8	7.1
FUTURE JETm 2C-ST	**FUTURE JET 2C-ST**	**1"**	**1"**	111	393	217 *	162	46	208	208	142	91	10	11.2	11.2
FUTURE JETm 2A-ST	**FUTURE JET 2A-ST**													12.0	11.2

(*) h=236 mm for single-phase 110 V versions

PALLET CAPACITY

TYPE **Single-phase**	 **Three-phase**	NO. OF PUMPS
FUTURE JETm 1C-ST	**FUTURE JET 1C-ST**	84
FUTURE JETm 1B-ST	**FUTURE JET 1B-ST**	84
FUTURE JETm 1A-ST	**FUTURE JET 1A-ST**	84
FUTURE JETm 2C-ST	**FUTURE JET 2C-ST**	60
FUTURE JETm 2A-ST	**FUTURE JET 2A-ST**	60

MATERIALS AND COMPONENTS

1	**Pump body**	Stainless steel **AISI 304**,provided with ISO 228/1 threaded ports
2	**Cover**	Stainless steel **AISI 304**
3	**Ejector unit**	Noryl™
4	**Impeller**	Stainless steel **AISI 304**
5	**Mechanical seal**	
6	**Motor shaft**	Stainless steel **AISI 431**
7	**Electric motor**	**FUTURE JETm-ST**: single-phase 230 V - 50 Hz with winding integrated thermal motor protection **FUTURE JET-ST**: three-phase 230/400 V - 50 Hz ※ Pumps are equipped with high-efficiency motors (IEC 60034-30-1) class **IE2** for single-phase models class **IE3** for three-phase models – Continuous running duty **S1** – Insulation: CLASS F – Protection rating: IP X4

Water pump	Seal	Shaft	Materials
FUTURE JET 1-ST	**AR-12**	Ø 12 mm	Ceramic / Graphite / NBR
FUTURE JET 2-ST	**AR-14**	Ø 14 mm	Ceramic / Graphite / NBR

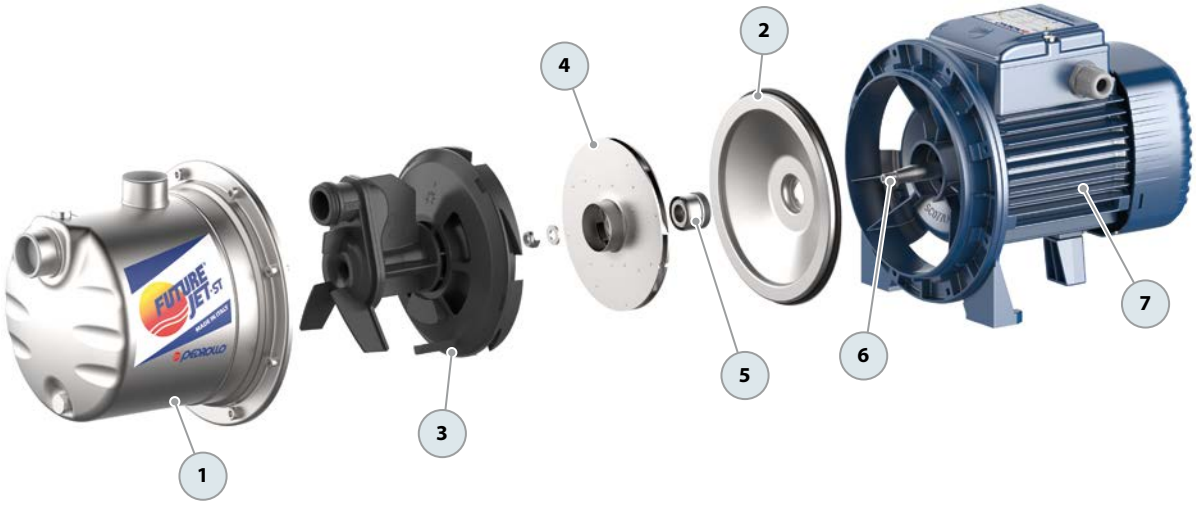

EXAMPLES OF INSTALLATION

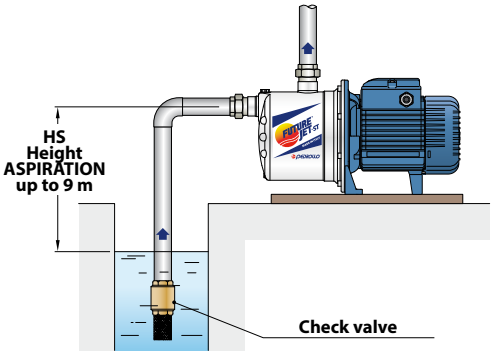

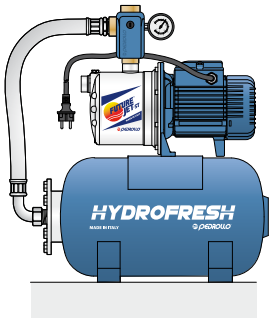

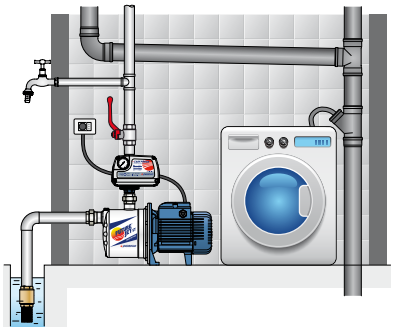

JCR "JET" self-priming pumps

Clean water

Domestic use

Civil use

PERFORMANCE RANGE

- Flow rate up to **70 l/min** (4.2 m³/h)
- Head up to **60 m**

INSTALLATION AND USE

JCR self-priming pumps are designed to draw water and liquids that contain air.

They are reliable and easy to operate. They are a favorite for domestic use, particularly effective for water distribution with small to medium-sized pressure tanks and suitable for irrigation.

APPLICATION LIMITS

- Manometric suction head up to **9 m** (HS)
- Liquid temperature between **-10 °C** and **+40 °C**
- Ambient temperature up to **+40 °C**
- Maximum working pressure **6 bar**

AVAILABLE UPON REQUEST

※ Different voltage requirements 60 Hz frequency

※ Certified pumps WRAS APPROVED PRODUCT

PATENTS - TRADE MARKS - MODELS

- European Patent No. 1 510 696

EXAMPLES OF INSTALLATION

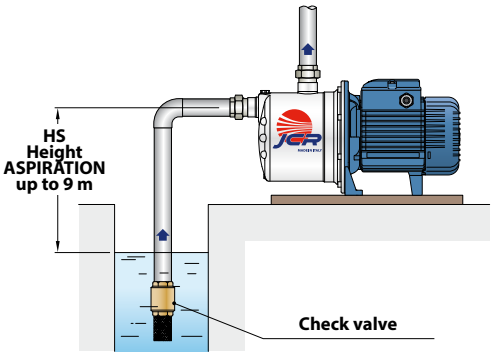

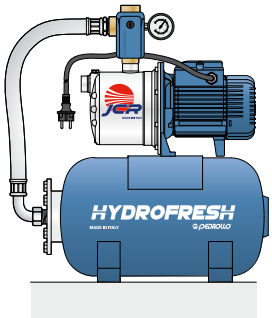

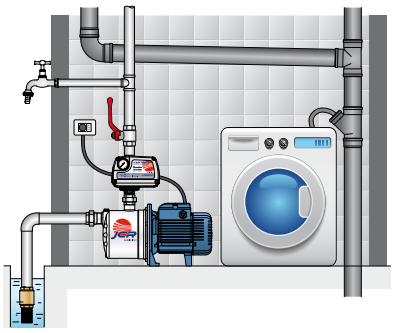

CURVES AND PERFORMANCE DATA – HS=0 m

50 Hz

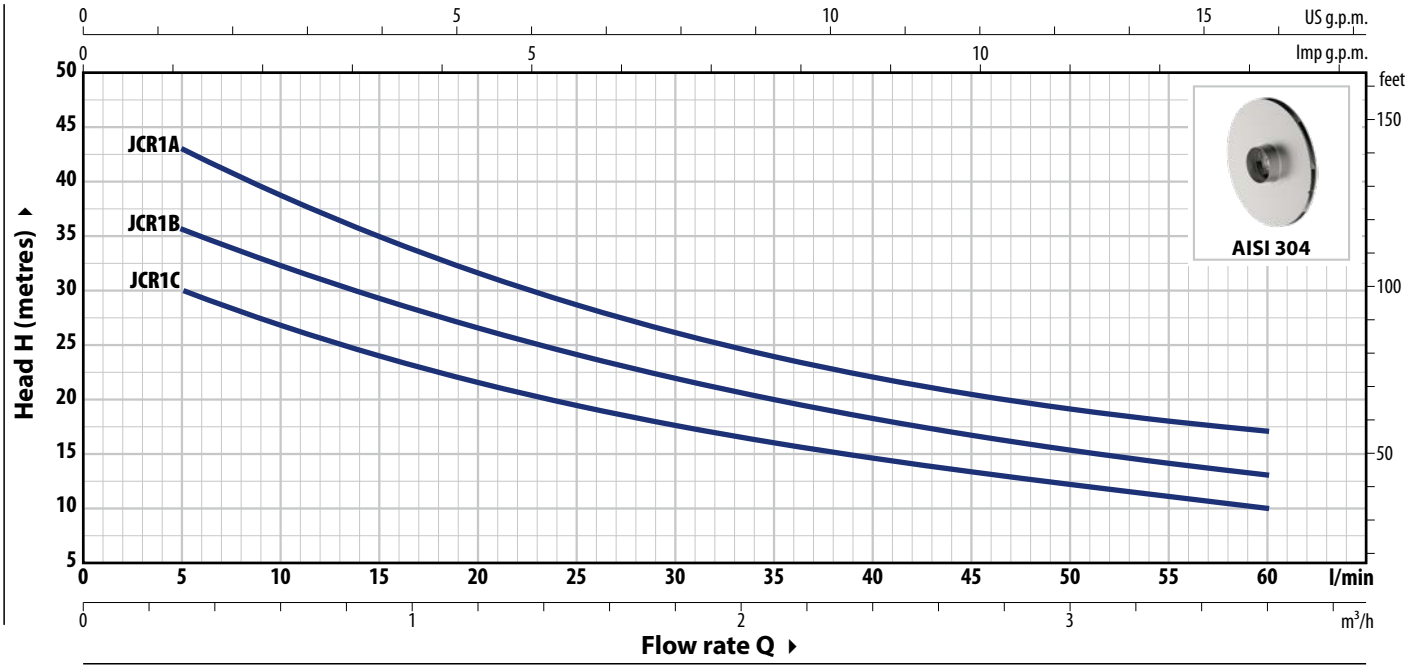

TYPE		POWER (P2)				Q m³/h	0	0.3	0.6	1.2	1.5	1.8	2.4	2.7	3.0	3.6
Single-ph.	Three-ph.	kW	HP	1~	3~	l/min	**0**	**5**	**10**	**20**	**25**	**30**	**40**	**45**	**50**	**60**
JCRm 1C	JCR 1C	0.37	0.50	IE2	IE3	H metres	34	30	27	21.7	19.5	17.7	14.7	13.4	12.2	10
JCRm 1B	JCR 1B	0.48	0.65				39.5	35.5	32.4	26.6	24.2	22	18.3	16.7	15.3	13
JCRm 1A	JCR 1A	0.55	0.75				48	43	39	31.5	28.5	26	22	20.5	19	17

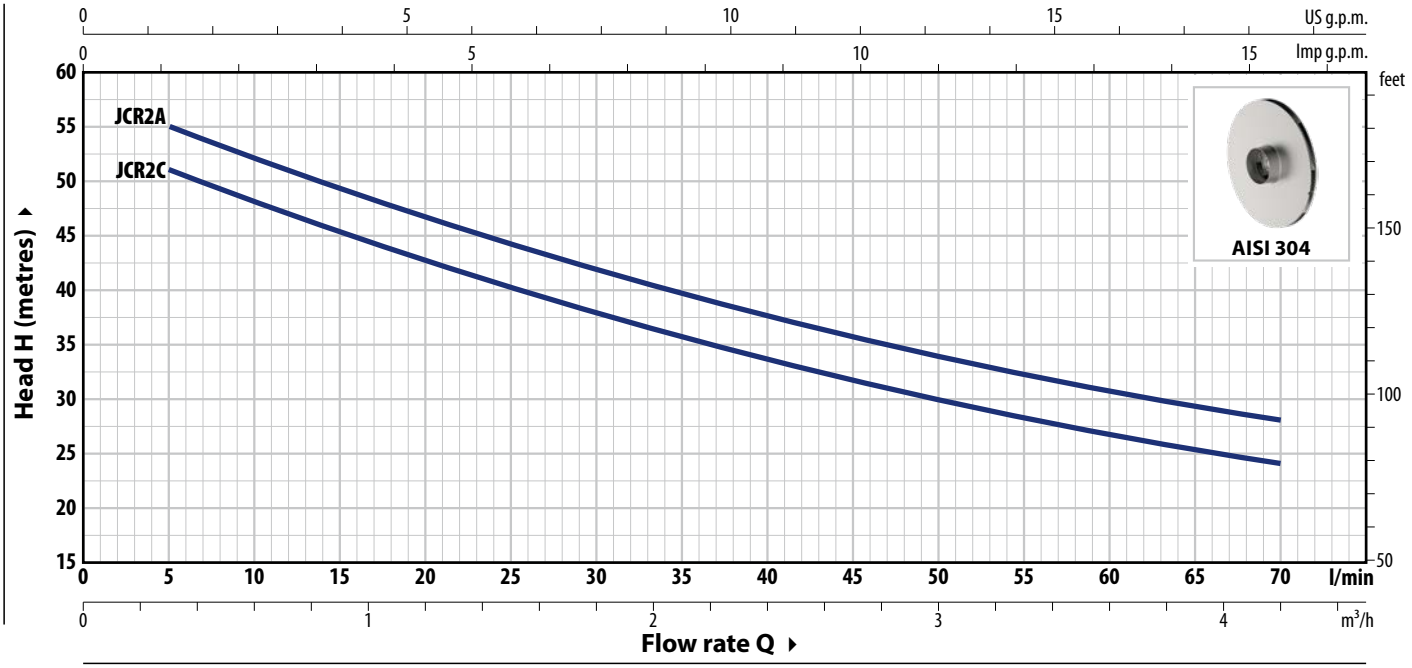

TYPE		POWER (P2)				Q m³/h	0	0.3	0.6	1.2	1.8	2.4	2.7	3.0	3.6	4.2
Single-ph.	Three-ph.	kW	HP	1~	3~	l/min	**0**	**5**	**10**	**20**	**30**	**40**	**45**	**50**	**60**	**70**
JCRm 2C	JCR 2C	0.75	1	IE2	IE3	H metres	54	51	48	42.5	38	33.5	31.5	30	26.5	24
JCRm 2A	JCR 2A	0.90	1.25				58	55	52	46.5	42	37.5	35.5	34	31	28

Q = Flow rate **H** = Total manometric head **HS** = Suction height

Performance curves comply with EN ISO 9906 Grade 3B tolerance limits.

ABSORPTION

TYPE	VOLTAGE
Single-ph.	**230 V**
JCRm 1C	2.6 A
JCRm 1B	3.2 A
JCRm 1A	3.6 A
JCRm 2C	5.8 A
JCRm 2A	6.2 A

TYPE	VOLTAGE	
Three-ph.	**230 V - Δ**	**400 V - ⅄**
JCR 1C	1.7 A	1.0 A
JCR 1B	2.1 A	1.2 A
JCR 1A	2.8 A	1.6 A
JCR 2C	4.7 A	2.7 A
JCR 2A	5.2 A	3.0 A

DIMENSIONS AND WEIGHT

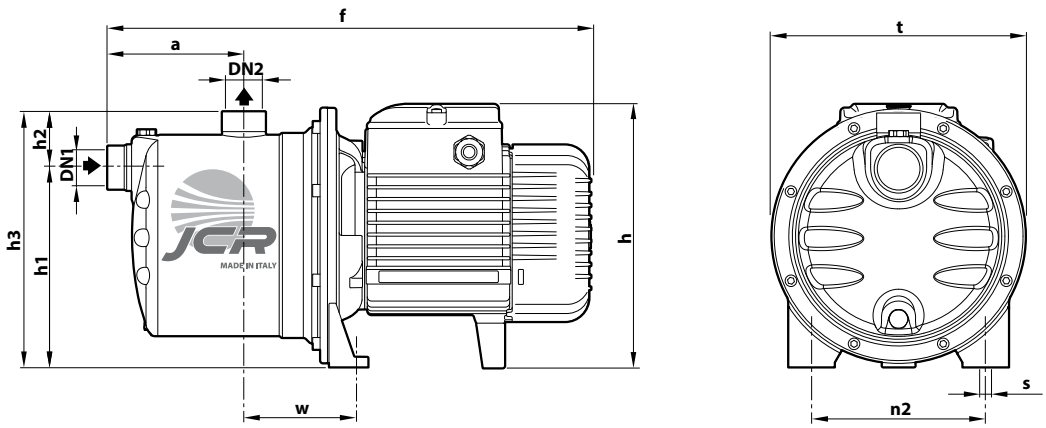

TYPE		PORTS		DIMENSIONS mm										kg	
Single-ph.	**Three-ph.**	**DN1**	**DN2**	a	f	h	h1	h2	h3	t	n2	w	s	1~	3~
JCRm 1C	**JCR 1C**	**1"**	**1"**	113	367	183	132	51	183	182	120	87	9	7.1	7.1
JCRm 1B	**JCR 1B**													7.1	7.1
JCRm 1A	**JCR 1A**													7.8	7.1
JCRm 2C	**JCR 2C**	**1"**	**1"**	111	393	217 *	162	46	208	208	142	91	10	11.2	11.2
JCRm 2A	**JCR 2A**													12.0	11.2

(*) h=236 mm for single-phase 110 V versions

PALLET CAPACITY

TYPE		NO. OF PUMPS
Single-ph.	**Three-ph.**	
JCRm 1C	**JCR 1C**	84
JCRm 1B	**JCR 1B**	84
JCRm 1A	**JCR 1A**	84
JCRm 2C	**JCR 2C**	60
JCRm 2A	**JCR 2A**	60

MATERIALS AND COMPONENTS

1	**Pump body**	Stainless steel **AISI 304**,provided with ISO 228/1 threaded ports
2	**Cover**	Stainless steel **AISI 304**
3	**Ejector unit**	Noryl™
4	**Impeller**	Stainless steel **AISI 304**

5 Mechanical seal

Water pump	Seal	Shaft	Materials
JCR1	**AR-12**	Ø 12 mm	Ceramic / Graphite / NBR
JCR2	**AR-14**	Ø 14 mm	Ceramic / Graphite / NBR

6	**Motor shaft**	Stainless steel **AISI 431**

7 Electric motor

JCRm: single-phase 230 V - 50 Hz with winding integrated thermal motor protection
JCR: three-phase 230/400 V - 50 Hz

※ Pumps are equipped with high-efficiency motors (IEC 60034-30-1)
class **IE2** for single-phase models
class **IE3** for three-phase models

- Continuous running duty **S1**
- Insulation: CLASS F
- Protection rating: IP X4

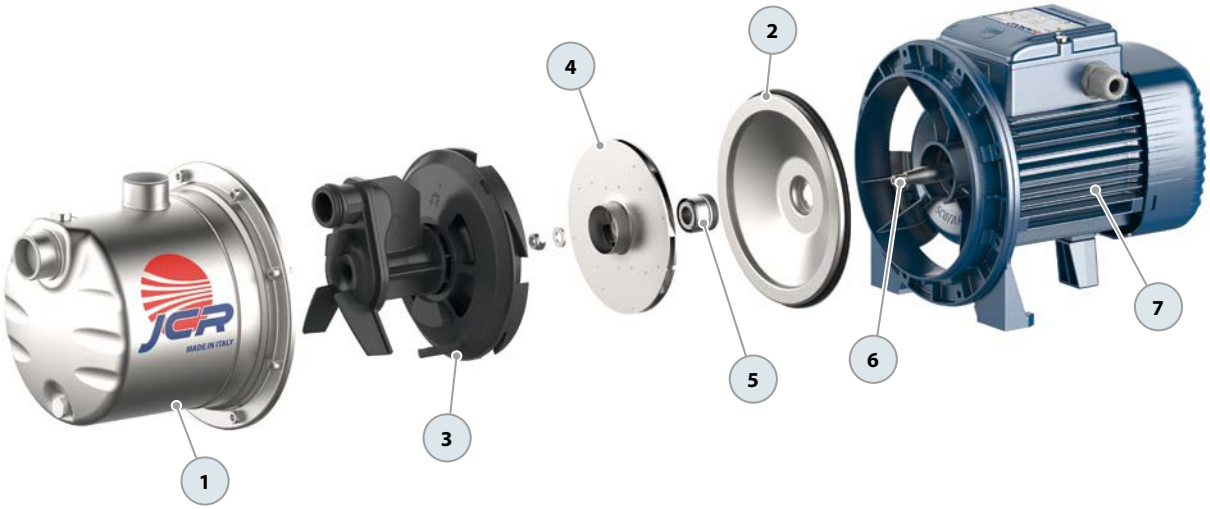

MAGNIFICA Self-priming swimming pool pumps

Swimming pools residential

Swimming pools Department

※ **For pools up to 180 m³**

※ **Robust electric pumps constructed with high-quality components and thick materials for extended durability and quiet operation.**

※ **High water flow rate paired with low energy consumption.**

※ **Double insulation between the pump and electric motor ensures maximum safety, with the pump/motor shaft always insulated from water.**

※ **Pre-filter equipped with a transparent cover for easy visual inspection, featuring an extra-large filter basket to reduce cleaning frequency.**

※ **High resistance to heat, chemicals, and salt corrosion.**

※ **Supplied with 2" GAS threaded ISO 228/1 connection fittings and AISI 316 screws**

PERFORMANCE RANGE

- Flow rate up to **700 l/min** (42 m³/h)
- Head up to **23 m**

INSTALLATION AND USE

Self-priming pump with a built-in filter, designed for water circulation in residential swimming pools up to 180 m³.

APPLICATION LIMITS

- Swimming pool water (pH 6.5 8.4).
- Manometric suction head up to **4 m** (HS)
- Liquid temperature up to **+45 °C**
- Ambient temperature up to **+50 °C**
- Maximum working pressure **2.5 bar**

ELECTRIC MOTOR

The three-phase pumps are equipped with newly developed electric motors designed to work with inverters, which guarantee stable and quiet operation.

Efficiency class **IE3** for three-phase motors, **IE2** for single-phase motors, class F insulation and IP55 protection.

AVAILABLE UPON REQUEST

※ Different voltage requirements 60 Hz frequency
※ Smooth connection fitting **63 mm**
※ Smooth connection fitting **2" BS**
※ Threaded connection fitting **2" NPT**

PATENTS - TRADE MARKS - MODELS

- **MAGNIFICA®** Registered trademark no. 018159079
- Registered Community Model No. 007671839

CURVES AND PERFORMANCE DATA – HS=0 m

50 Hz

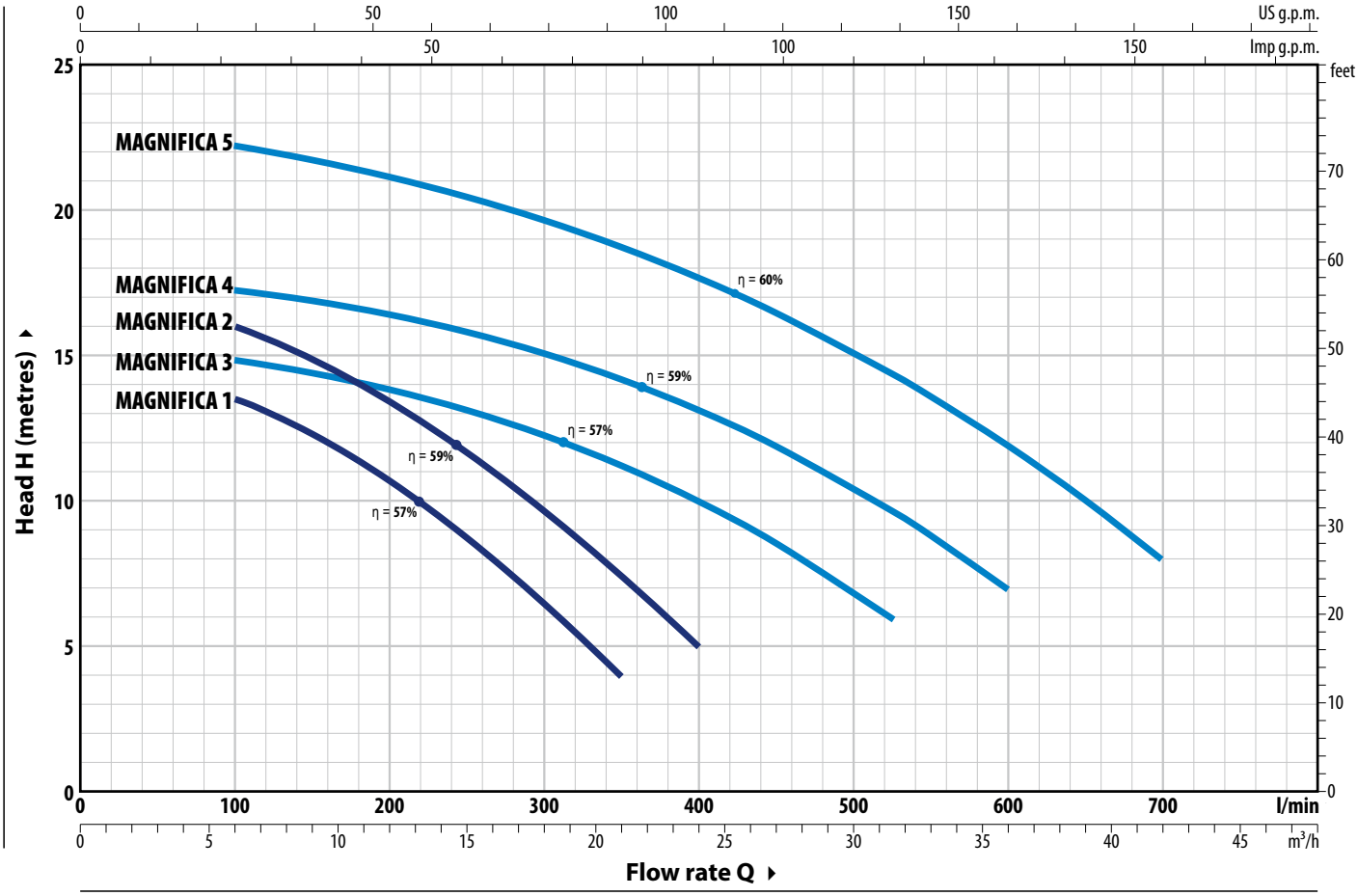

TYPE		POWER (P2)				Q	m³/h	0	6.0	9.0	12	15	18	21	24	30	36	42
Single-phase	**Three-phase**	**kW**	**HP**	**1~**	**3~**		l/min	**0**	**100**	**150**	**200**	**250**	**300**	**350**	**400**	**525**	**600**	**700**
MAGNIFICA 1m	**MAGNIFICA 1**	0.55	0.75					14.5	13.5	12.3	10.7	8.8	6.5	4				
MAGNIFICA 2m	**MAGNIFICA 2**	0.75	1					17	16	15	13.5	11.7	9.7	7.4	5			
MAGNIFICA 3m	**MAGNIFICA 3**	1.1	1.5	**IE2**	**IE3**	**H**	metres	15.5	15	14.4	14	13.2	12.3	11.3	10	6		
MAGNIFICA 4m	**MAGNIFICA 4**	1.5	2					17.7	17.3	17	16.4	15.8	15	14.2	13	9.6	7	
MAGNIFICA 5m	**MAGNIFICA 5**	2.2	3					23	22.2	21.8	21.2	20.5	19.7	18.8	17.7	14.4	12	8

Q = Flow rate **H** = Total manometric head **HS** = Suction height

Performance curves comply with EN ISO 9906 Grade 3B tolerance limits.

ABSORPTION

TYPE	VOLTAGE
Single-phase	**230 V**
MAGNIFICA 1m	4.2 A
MAGNIFICA 2m	5.6 A
MAGNIFICA 3m	8.2 A
MAGNIFICA 4m	9.7 A
MAGNIFICA 5m	13.0 A

TYPE	VOLTAGE	
Three-phase	**230 V - Δ**	**400 V - ⅄**
MAGNIFICA 1	2.8 A	1.6 A
MAGNIFICA 2	3.6 A	2.1 A
MAGNIFICA 3	5.4 A	3.1 A
MAGNIFICA 4	7.3 A	4.2 A
MAGNIFICA 5	8.6 A	5.0 A

DIMENSIONS AND WEIGHT

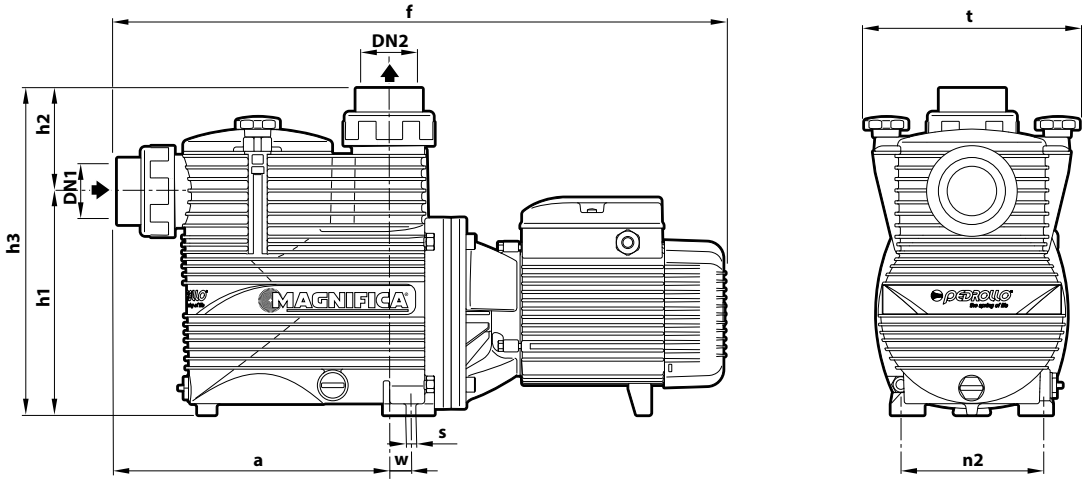

TYPE		PORTS		DIMENSIONS mm									kg	
Single-phase	**Three-phase**	**DN1**	**DN2**	a	f	h1	h2	h3	n1	w	s	t	1~	3~
MAGNIFICA 1m	**MAGNIFICA 1**	**2"**	**2"**	294	583	240	113	353	155	4.3	10.5	235	14.1	14.1
MAGNIFICA 2m	**MAGNIFICA 2**												15.0	15.0
MAGNIFICA 3m	**MAGNIFICA 3**			294	657	240	113	353	155	15.8	10.5	235	19.4	19.4
MAGNIFICA 4m	**MAGNIFICA 4**												20.6	20.6
MAGNIFICA 5m	**MAGNIFICA 5**				677								23.3	23.3

BASEMENT (mm)

Stand for MAGNIFICA 1-2

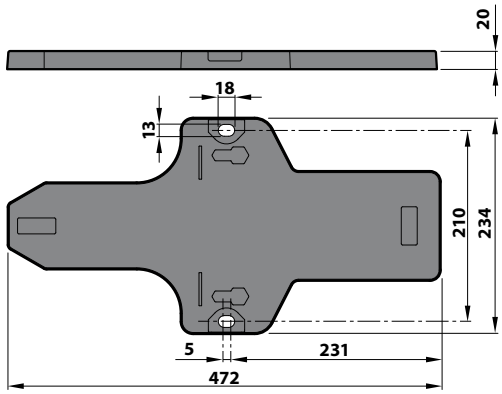

Stand for MAGNIFICA 3-4-5

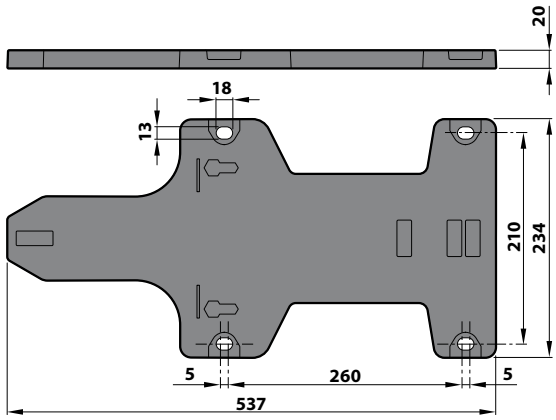

MATERIALS AND COMPONENTS

1	**Pump body**	Glass-fibre reinforced polypropylene with ISO 228/1 threaded ports
2	**Seal insert**	Glass-fibre reinforced polypropylene
3	**Diffuser**	Noryl™
4	**Impeller**	Noryl™
5	**Mechanical seal**	
6	**Motor shaft**	Stainless steel **AISI 431**
7	**Electric motor**	**MAGNIFICA m**: single-phase 230 V - 50 Hz with winding integrated thermal motor protection **MAGNIFICA**: three-phase 230/400 V - 50 Hz ※ Pumps are equipped with high-efficiency motors (IEC 60034-30-1) class **IE2** for single-phase models class **IE3** for three-phase models Continuous running duty **S1**
8	**O-Ring (OR)**	NBR
9	**Cover**	Polycarbonate
10	**Pre-filter**	Polypropylene
11	**Closing knob**	Nylon
12	**Fittings**	PVC-U
13	**Base**	Polypropylene

Water pump	Seal	Shaft	Materials
MAGNIFICA 1-2	**AR-17**	Ø 17	Ceramic / Graphite / NBR
MAGNIFICA 3-4-5	**AR-20R**	Ø 20	Ceramic / Graphite / NBR

PRIMA Self-priming swimming pool pumps

Swimming pools residential

※ **For pools up to 70 m³**

※ **Robust electric pumps constructed with high-quality components and thick materials for extended durability and quiet operation.**

※ **Pre-filter equipped with a transparent cover for easy visual inspection, featuring an extra-large filter basket to reduce cleaning frequency.**

※ **High resistance to heat, chemicals, and salt corrosion.**

※ **Motor case painted with cataphoresis for added protection**

※ **Supplied with 1½" GAS threaded ISO 228/1 connection fittings and AISI 304 screws**

PERFORMANCE RANGE

- Flow rate up to **310 l/min** (18.6 m³/h)
- Head up to **16 m**

INSTALLATION AND USE

Self-priming pump with a built-in filter, designed for water circulation in residential swimming pools up to **70 m³**.

APPLICATION LIMITS

- Manometric suction head up to **4 m** (HS)
- Liquid temperature up to **+40 °C**
- Ambient temperature up to **+40 °C**
- Maximum working pressure **2.5 bar**
- Swimming pool water (pH 6.5 8.4).

CURVES AND PERFORMANCE DATA – HS=0 m

50 Hz

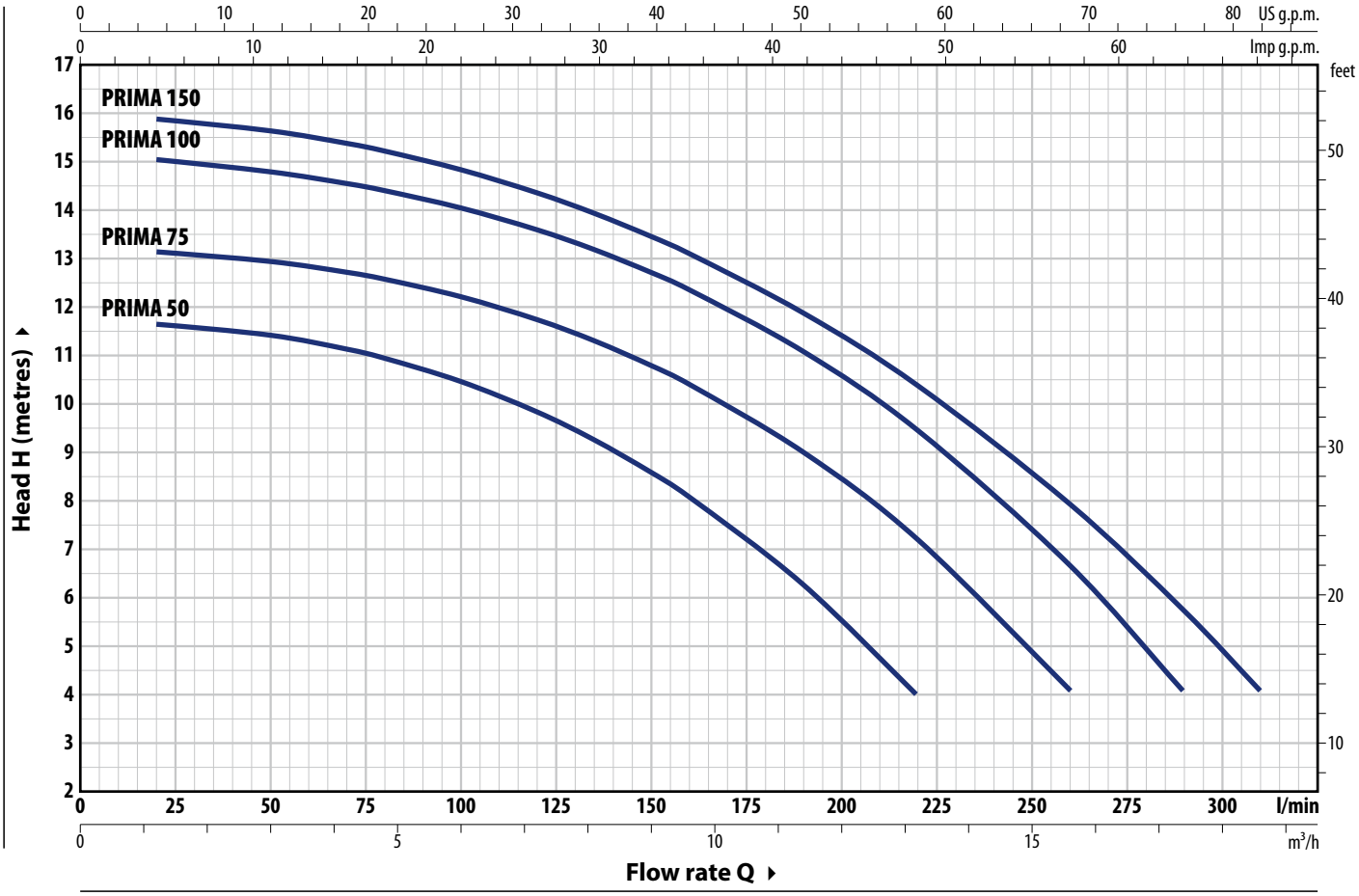

TYPE		POWER (P2)				Q	m³/h	0	1.2	3	4.2	4.8	6	7.2	9	9.6	11.4	13.2	15.6	17.4	18.6
Single-phase	**Three-phase**	**kW**	**HP**	**1~**	**3~**		l/min	**0**	**20**	**50**	**70**	**80**	**100**	**120**	**150**	**160**	**190**	**220**	**260**	**290**	**310**
PRIMA 50m	**PRIMA 50**	0.37	0.50					11.7	11.6	11.4	11.1	10.9	10.4	9.8	8.6	8	6.3	4			
PRIMA 75m	**PRIMA 75**	0.55	0.75	**IE2**	**IE3**	**H**	metres	13.2	13.1	13	12.7	12.6	12.2	11.7	10.8	10.4	9	7	4		
PRIMA 100m	**PRIMA 100**	0.75	1					15	15	14.8	14.5	14.4	14	13.6	12.7	12.3	11	9.4	6.6	4	
PRIMA 150m	**PRIMA 150**	1.1	1.5					16	15.8	15.6	15.3	15.2	14.8	14.3	13.4	13	11.8	10.3	8	5.7	4

Q = Flow rate **H** = Total manometric head **HS** = Suction height

Performance curves comply with EN ISO 9906 Grade 3B tolerance limits.

ABSORPTION

TYPE **Single-phase**	VOLTAGE **230 V**
PRIMA 50m	3.0 A
PRIMA 75m	3.8 A
PRIMA 100m	4.8 A
PRIMA 150m	5.5 A

TYPE **Three-phase**	VOLTAGE **230 V - Δ**	**400 V - ⅄**
PRIMA 50	2.6 A	1.5 A
PRIMA 75	2.8 A	1.6 A
PRIMA 100	2.9 A	1.7 A
PRIMA 150	4.0 A	2.3 A

DIMENSIONS AND WEIGHT

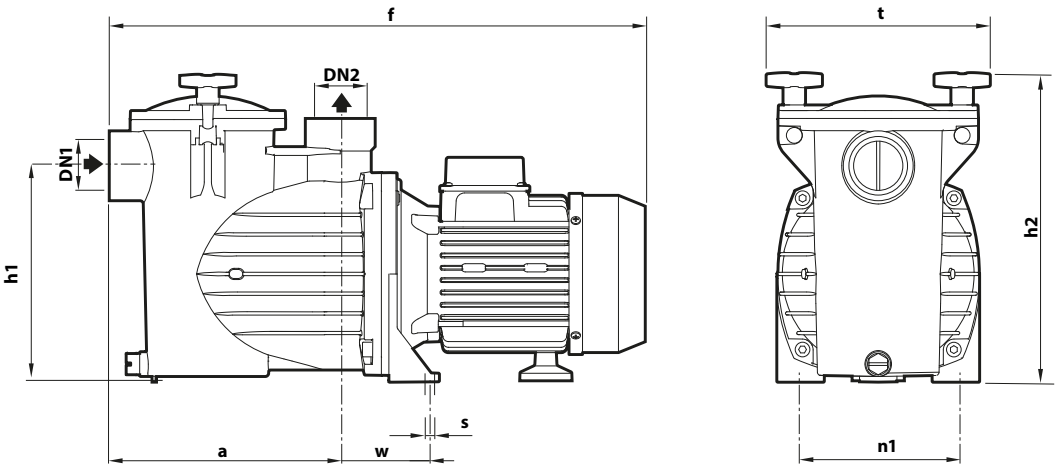

TYPE		PORTS		DIMENSIONS mm								kg	
Single-phase	**Three-phase**	**DN1**	**DN2**	a	f	h1	h2	n1	w	s	t	1~	3~
PRIMA 50m	**PRIMA 50**	**1½"**	**1½"**	205	476	191	275	140	68	9	197	8.8	8.8
PRIMA 75m	**PRIMA 75**											9.8	9.8
PRIMA 100m	**PRIMA 100**												
PRIMA 150m	**PRIMA 150**												

MATERIALS AND COMPONENTS

1	**Pump body**	Glass-fibre reinforced polypropylene
2	**Seal insert**	Glass-fibre reinforced polypropylene
3	**Diffuser**	Glass-fibre reinforced polypropylene
4	**Impeller**	Noryl™
5	**Mechanical seal**	Seal / Shaft / Materials **AR-17** / Ø 17 / Graphite / Alumina Oxide / NBR
6	**Motor shaft**	Stainless steel **AISI 316**
7	**Electric motor**	**PRIMA m:** single-phase 230 V - 50 Hz with winding integrated thermal motor protection **PRIMA:** three-phase 230/400 V - 50 Hz ※ Pumps are equipped with high-efficiency motors (IEC 60034-30-1) class **IE3** for three-phase models – Continuous running duty **S1** – Insulation: CLASS F – Protection rating: IP 55
8	**O-Ring (OR)**	NBR
9	**Cover**	Polycarbonate
10	**Pre-filter**	Polypropylene
11	**Closing knob**	Nylon
12	**Fittings**	PVC

VILLABELLA Self-priming swimming pool pumps

Swimming pools residential

※ **For pools up to 135 m³**

※ **Robust electric pumps constructed with high-quality components and thick materials for extended durability and quiet operation.**

※ **Pre-filter equipped with a transparent cover for easy visual inspection, featuring an extra-large filter basket to reduce cleaning frequency.**

※ **High resistance to heat, chemicals, and salt corrosion.**

※ **Motor case painted with cataphoresis for added protection**

※ **Supplied with 2" GAS threaded ISO 228/1 connection fittings and AISI 304 screws**

PERFORMANCE RANGE

- Flow rate up to **600 l/min** (36 m³/h)
- Head up to **21 m**

INSTALLATION AND USE

Self-priming pump with a built-in filter, designed for water circulation in residential swimming pools up to **135 m³**.

APPLICATION LIMITS

- Manometric suction head up to **4 m** (HS)
- Liquid temperature up to **+40 °C**
- Ambient temperature up to **+40 °C**
- Maximum working pressure **2.5 bar**
- Swimming pool water (pH 6.5 – 8.4).

AVAILABLE UPON REQUEST

※ Smooth connection fitting **63 mm**
※ Smooth connection fitting **2" BS**

Key to open the pre-filter cover included.

CURVES AND PERFORMANCE DATA – HS=0 m

50 Hz

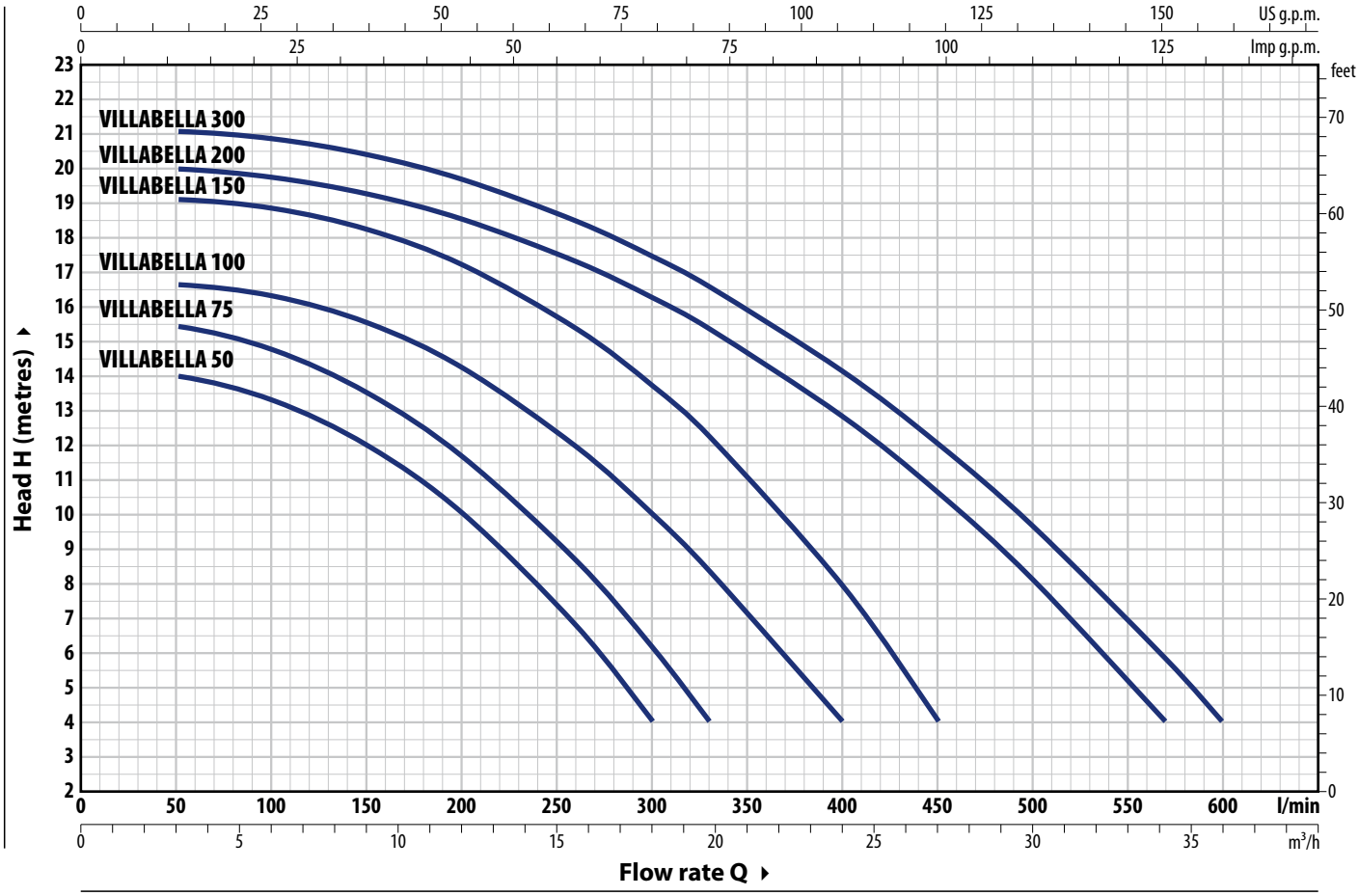

TYPE		POWER (P2)				Q m³/h	0	3	6	9	12	15.6	18	19.8	24	27	34.2	36
Single-phase	**Three-phase**	**kW**	**HP**	**1~**	**3~**	l/min	**0**	**50**	**100**	**150**	**200**	**260**	**300**	**330**	**400**	**450**	**570**	**600**
VILLABELLA 50m	**VILLABELLA 50**	0.37	0.50				14	14	13.3	12	10	6.8	4					
VILLABELLA 75m	**VILLABELLA 75**	0.55	0.75				15.5	15.5	14.8	13.5	11.7	8.7	6	4				
VILLABELLA 100m	**VILLABELLA 100**	0.75	1				16.5	16.4	16.3	15.6	14.2	12	10	8.3	4			
VILLABELLA 150m	**VILLABELLA 150**	1.1	1.5	**IE2**	**IE3**	**H** metres	19	18.9	18.8	18.2	17.2	15.3	13.7	12.2	8	4		
VILLABELLA 200m	**VILLABELLA 200**	1.5	2				20	19.9	19.8	19.3	18.5	17.3	16.3	15.4	12.8	10.6	4	
VILLABELLA 300m	**VILLABELLA 300**	2.2	3				21	20.9	20.8	20.4	19.7	18.5	17.4	16.6	14	12	5.8	4

Q = Flow rate **H** = Total manometric head **HS** = Suction height

Performance curves comply with EN ISO 9906 Grade 3B tolerance limits.

ABSORPTION

TYPE **Single-phase**	VOLTAGE **230 V**
VILLABELLA 50m	4.2 A
VILLABELLA 75m	4.7 A
VILLABELLA 100m	6.0 A
VILLABELLA 150m	7.5 A
VILLABELLA 200m	9.5 A
VILLABELLA 300m	10.5 A

TYPE	VOLTAGE	
Three-phase	**230 V - Δ**	**400 V - ⅄**
VILLABELLA 50	2.8 A	1.6 A
VILLABELLA 75	2.9 A	1.7 A
VILLABELLA 100	3.5 A	2.0 A
VILLABELLA 150	4.8 A	2.8 A
VILLABELLA 200	6.6 A	3.8 A
VILLABELLA 300	7.4 A	4.3 A

DIMENSIONS AND WEIGHT

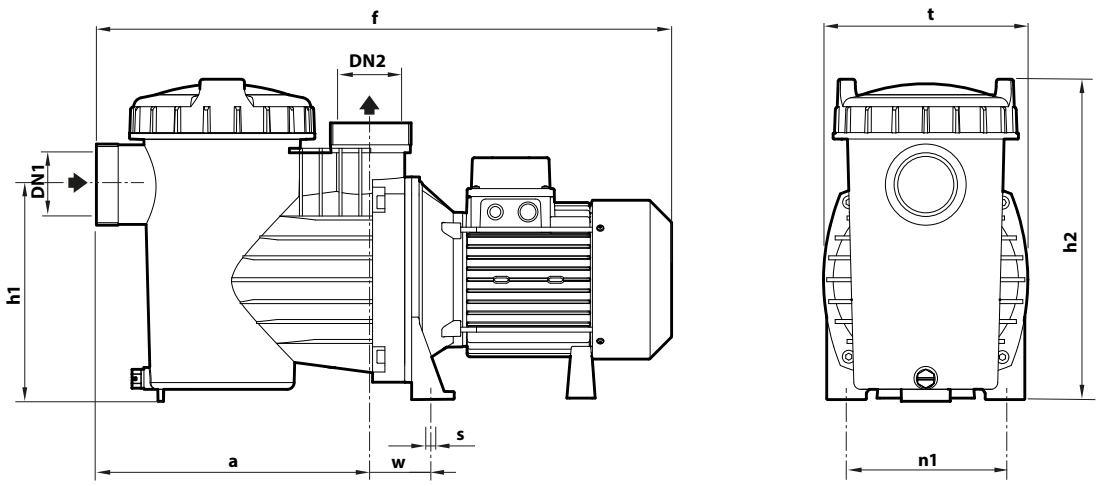

TYPE		PORTS		DIMENSIONS mm								kg	
Single-phase	**Three-phase**	**DN1**	**DN2**	a	f	h1	h2	n1	w	s	t	1~	3~
VILLABELLA 50m	**VILLABELLA 50**	**2"**	**2"**	277	550	216	315	160	84	9	206	11.7	11.7
VILLABELLA 75m	**VILLABELLA 75**											11.5	11.5
VILLABELLA 100m	**VILLABELLA 100**											12.9	12.9
VILLABELLA 150m	**VILLABELLA 150**				580							13.9	13.9
VILLABELLA 200m	**VILLABELLA 200**											14.9	14.9
VILLABELLA 300m	**VILLABELLA 300**				630							17.4	17.4

MATERIALS AND COMPONENTS

1	**Pump body**	Glass-fibre reinforced polypropylene
2	**Seal insert**	Glass-fibre reinforced polypropylene
3	**Diffuser**	Glass-fibre reinforced polypropylene
4	**Impeller**	Noryl™
5	**Mechanical seal**	Seal / Shaft / Materials **AR-15** / Ø 15 / Graphite / Alumina Oxide / NBR
6	**Motor shaft**	Stainless steel **AISI 316**
7	**Electric motor**	**VILLABELLA m**: single-phase 230 V - 50 Hz with winding integrated thermal motor protection **VILLABELLA**: three-phase 230/400 V - 50 Hz ※ Pumps are equipped with high-efficiency motors (IEC 60034-30-1) class **IE3** for three-phase models – Continuous running duty **S1** – Insulation: CLASS F – Protection rating: IP 55
8	**O-Ring (OR)**	NBR
9	**Cover**	Polycarbonate
10	**Pre-filter**	Polypropylene
11	**Fittings**	PVC

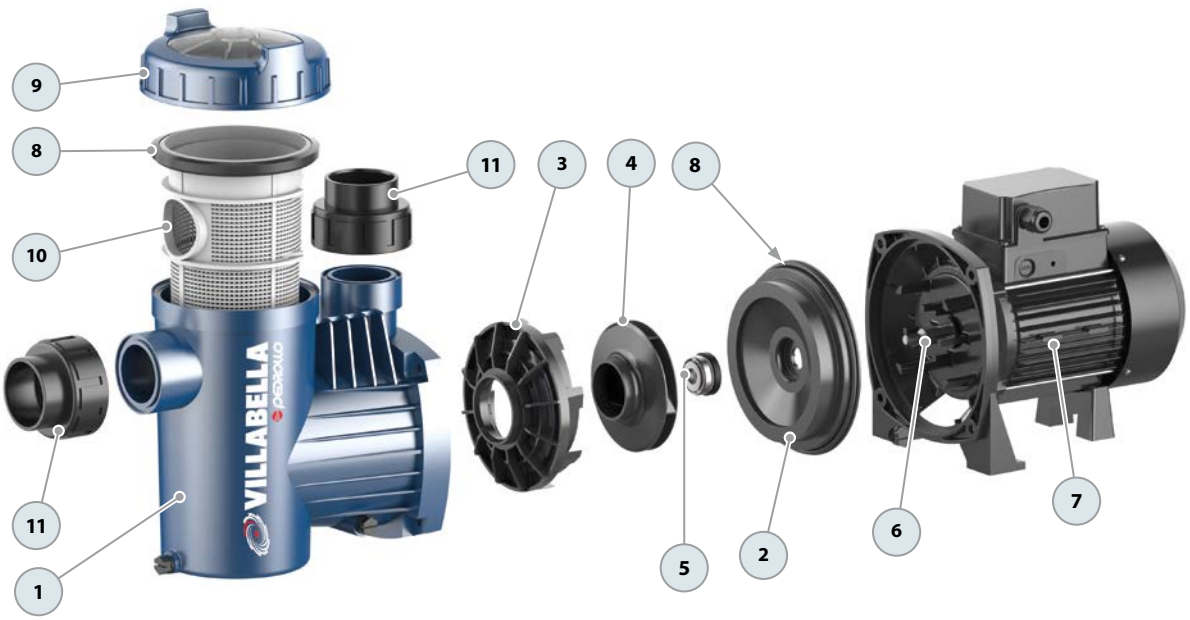

MAXIMA Self-priming swimming pool pumps

Swimming pools Department

※ **For pools up to 1080 m³**

※ **Robust electric pumps constructed with high-quality components and thick materials for extended durability and quiet operation.**

※ **Pre-filter equipped with a transparent cover for easy visual inspection, featuring an extra-large filter basket to reduce cleaning frequency.**

※ **Special anti-corrosion plastic base that provides stable support for the pump and piping.**

※ **High resistance to heat, chemicals, and salt corrosion.**

※ **Motor case with cataphoresis treatment**

※ **AISI 316 screws**

PERFORMANCE RANGE

- Flow rate up to **2400 l/min** (180 m³/h)
- Head up to **16 m**

INSTALLATION AND USE

Self-priming pump with a built-in filter, designed for water circulation in residential swimming pools up to **1080 m³** in size.

APPLICATION LIMITS

- Manometric suction head up to **4 m** (HS)
- Liquid temperature up to **+40 °C**
- Ambient temperature up to **+40 °C**
- Maximum working pressure **2.5 bar**
- Swimming pool water (pH 6.5 – 8.4).

AVAILABLE UPON REQUEST

※ Bronze impeller

CURVES AND PERFORMANCE DATA – HS=0 m

50 Hz – n= 1450 min^{-1}

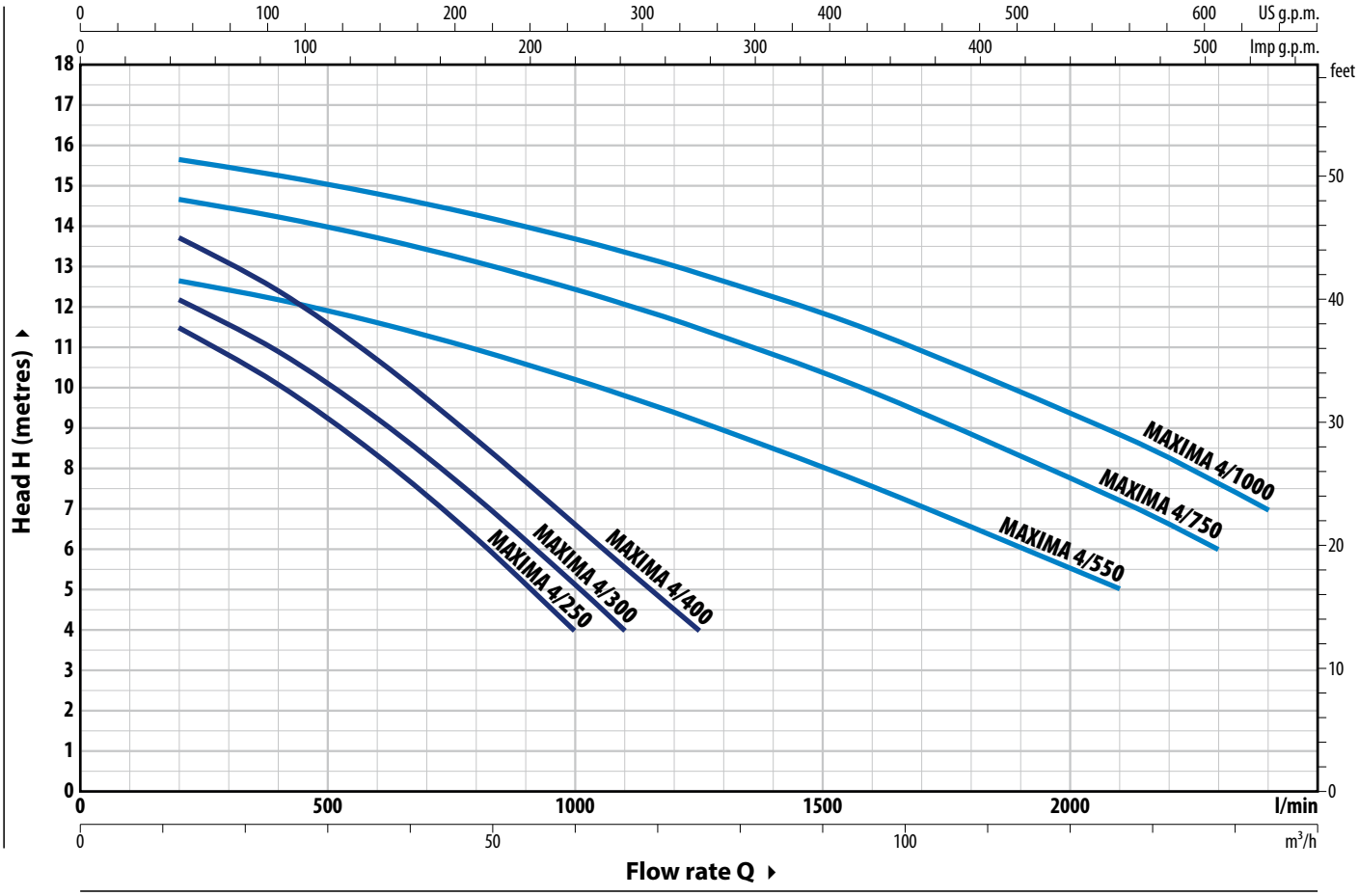

TYPE	POWER (P2)			Q m³/h	0	12	36	48	60	66	75	96	126	138	144
Three-phase	kW	HP	3~	l/min	**0**	**200**	**600**	**800**	**1000**	**1100**	**1250**	**1600**	**2100**	**2300**	**2400**
MAXIMA 4/250	1.8	2.5	IE3	H metres	12.5	11.5	8.4	6.3	4						
MAXIMA 4/300	2.2	3			13	12	9.2	7.3	5	4					
MAXIMA 4/400	3	4			14.5	13.5	10.7	8.7	6.6	5.6	4				
MAXIMA 4/550	4	5.5			13	12.5	11.6	11	10.2	9.8	9	7.5	5		
MAXIMA 4/750	5.5	7.5			15	14.5	13.7	13	12.4	12	11.5	10	7.2	6	
MAXIMA 4/1000	7.5	10			16	15.5	14.8	14.3	13.7	13.4	12.8	11.4	8.8	7.6	7

Q = Flow rate **H** = Total manometric head **HS** = Suction height

Performance curves comply with EN ISO 9906 Grade 3B tolerance limits.

ABSORPTION

TYPE	VOLTAGE			
Three-phase	**230 V - Δ**	**400 V - ⅄**	**400 V - Δ**	**690 V - ⅄**
MAXIMA 4/250	8.1 A	4.7 A	–	–
MAXIMA 4/300	7.8 A	4.5 A	–	–
MAXIMA 4/400	11.2 A	6.5 A	–	–
MAXIMA 4/550	15.6 A	9.0 A	–	–
MAXIMA 4/750	–	–	12.5 A	7.2 A
MAXIMA 4/1000	–	–	14.5 A	8.4 A

DIMENSIONS AND WEIGHT

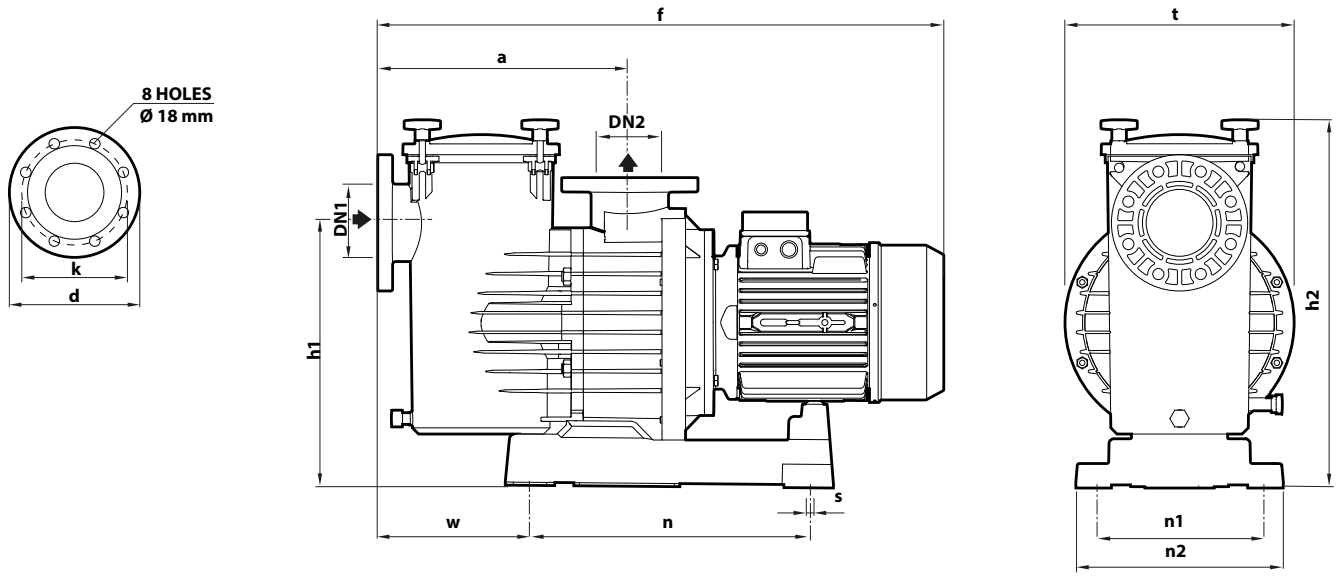

TYPE	PORTS		DIMENSIONS mm												kg
Three-phase	**DN1**	**DN2**	a	f	h1	h2	n	n1	n2	s	t	w	d	k	
MAXIMA 4/250	**110**	**110**	407	838	425	596	450	300	335	11	368	246	218	180	42.0
MAXIMA 4/300															42.5
MAXIMA 4/400															44.5
MAXIMA 4/550				863											53.4
MAXIMA 4/750				913											66.0
MAXIMA 4/1000															76.0

MATERIALS AND COMPONENTS

1	**Pump body**	Glass-fibre reinforced polypropylene
2	**Seal insert**	Glass-fibre reinforced polypropylene
3	**Diffuser**	Glass-fibre reinforced polypropylene
4	**Impeller**	Noryl™
5	**Mechanical seal**	Seal / Shaft / Materials **AR-30** / Ø 30 / Graphite / Alumina Oxide / NBR
6	**Motor shaft**	Stainless steel **AISI 316**
7	**Electric motor**	**MAXIMA**: three-phase 230/400 V - 50 Hz up to 4 kW 400/690 V - 50 Hz 5.5 to 7.5 kW – Continuous running duty **S1** – Insulation: CLASS F – Protection rating: IP 55
8	**O-Ring (OR)**	NBR
9	**Cover**	Polycarbonate
10	**Pre-filter**	Polypropylene
11	**Closing knob**	Nylon
12	**Base**	Noryl™

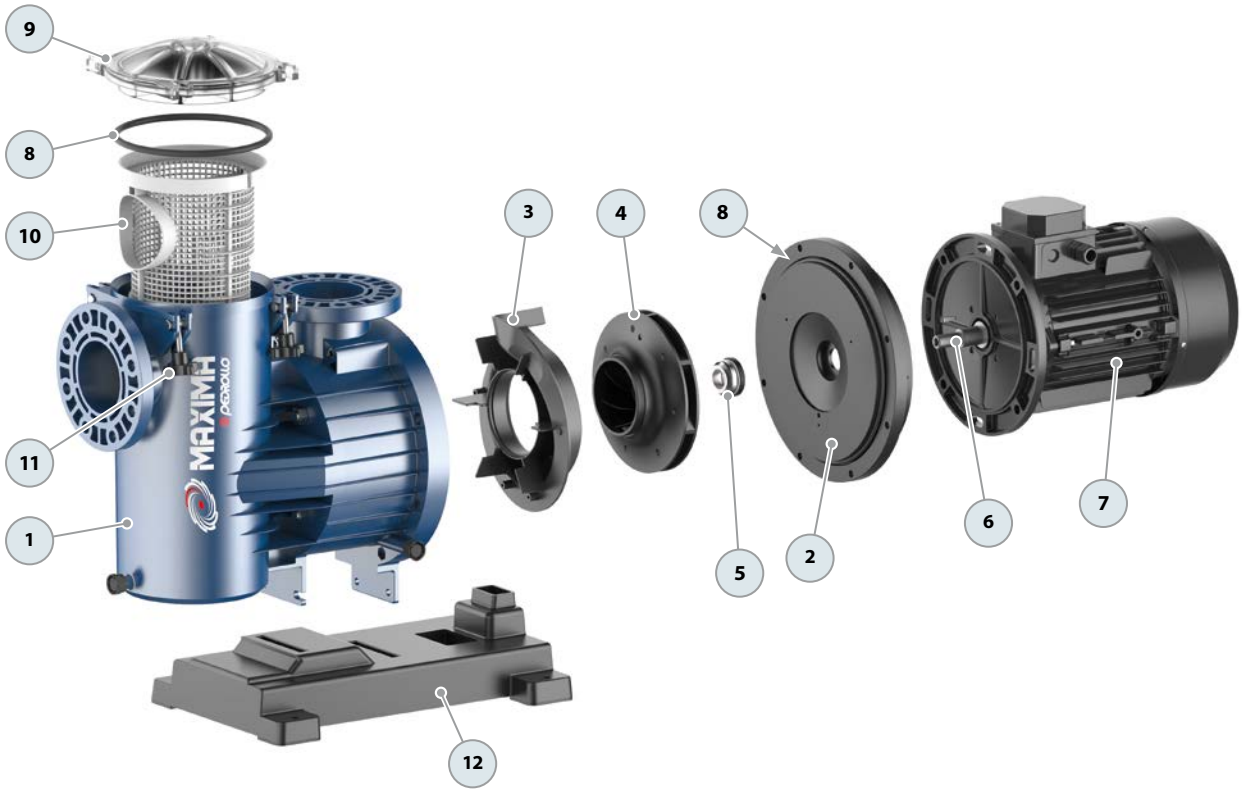

SPRINKLER Self-priming centrifugal pumps

Clean water

Domestic use

Civil use

PERFORMANCE RANGE

- Flow rate up to **300 l/min** (18.0 m³/h)
- Head up to **25.5 m**

INSTALLATION AND USE

SPRINKLER, a versatile self-priming pump designed to effortlessly draw water, even when air is present in the liquid.

With its reliable performance and user-friendly operation, **SPRINKLER** is ideal for various applications, including domestic, civil, and irrigation.

ELECTRIC MOTOR

The three-phase pumps are equipped with newly developed electric motors designed to work with inverters, which guarantee stable and quiet operation.

Efficiency class **IE3** for three-phase motors and **IE2** for single-phase motors, with class F insulation and IPX4 protection

APPLICATION LIMITS

- Manometric suction head up to **9 m** (HS)
- Liquid temperature between **-10 °C** and **+40 °C**
- Ambient temperature up to **+40 °C**
- Maximum working pressure **10 bar**

AVAILABLE UPON REQUEST

※ IPX5 protection

※ Other voltage and frequency 60 Hz

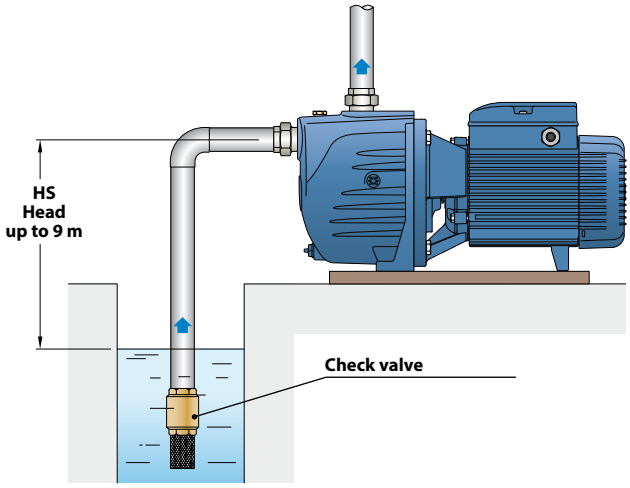

CURVES AND PERFORMANCE DATA – HS=0 m

50 Hz

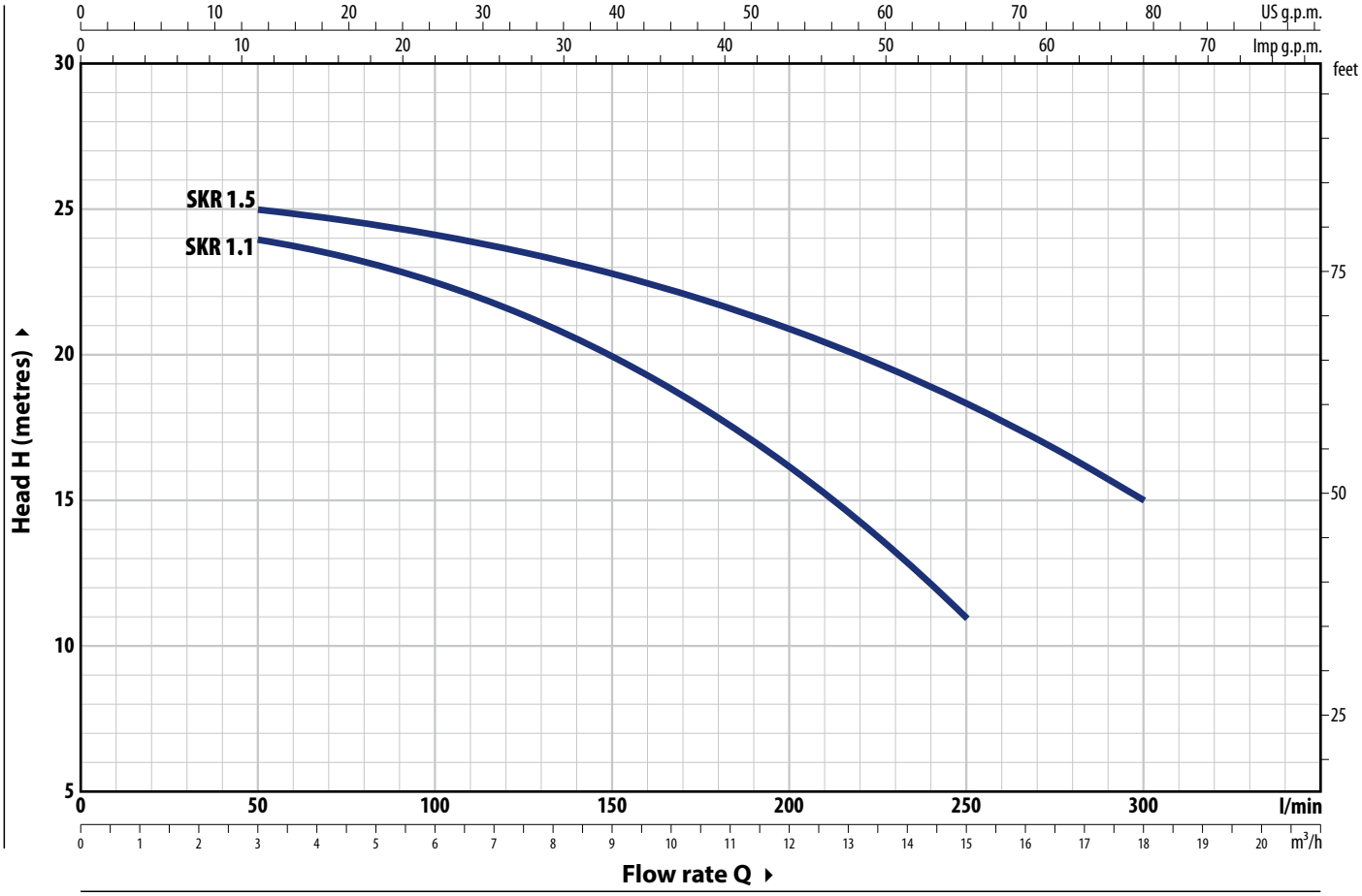

TYPE		POWER (P2)				Q	m³/h	0	3	6	9	12	15	18
Single-ph.	**Three-ph.**	**kW**	**HP**	**1~**	**3~**		l/min	**0**	**50**	**100**	**150**	**200**	**250**	**300**
SKRm 1.1	**SKR 1.1**	1.1	1.5	**IE2**	**IE3**	**H** metres		24.5	24	22.5	20	16.3	11	
SKRm 1.5	**SKR 1.5**	1.5	2					25.5	25	24	22.7	20.8	18.2	15

Q = Flow rate **H** = Total manometric head **HS** = Suction height

Performance curves comply with EN ISO 9906 Grade 3B tolerance limits.

ABSORPTION

TYPE Single-ph.	VOLTAGE 230 V
SKRm 1.1	7.5 A
SKRm 1.5	10.3 A

TYPE Three-phase	VOLTAGE 230 V - Δ	400 V - ⅄
SKR 1.1	5.0 A	2.9 A
SKR 1.5	6.7 A	3.9 A

DIMENSIONS AND WEIGHT

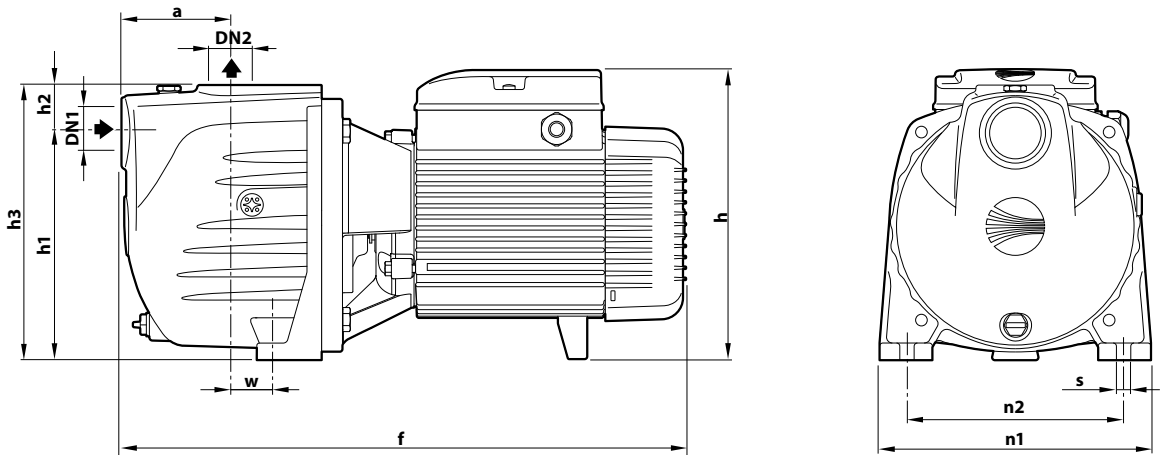

TYPE Single-ph.	TYPE Three-ph.	PORTS DN1	PORTS DN2	DIMENSIONS mm a	f	h	h1	h2	h3	n1	n2	w	s	kg 1~	kg 3~
SKRm 1.1	**SKR 1.1**	**1½"**	**1½"**	91	465	241	186	39	225	223	178	37.5	11	24.5	24.5
SKRm 1.5	**SKR 1.5**													25.8	25.8

PALLET CAPACITY

TYPE Single-ph.	TYPE Three-ph.	NO. OF PUMPS
SKRm 1.1	**SKR 1.1**	35
SKRm 1.5	**SKR 1.5**	35

MATERIALS AND COMPONENTS

1	**Pump body**	Cast iron with cataphoresis treatment, provided with ISO 228/1 threaded ports
2	**Cover**	Cast iron with cataphoresis treatment
3	**Diffuser**	Noryl™
4	**Impeller**	Noryl™
5	**Mechanical seal**	

Seal	Shaft	Materials
FN-18	Ø 18 mm	Graphite / Ceramic / NBR

6	**Motor shaft**	Stainless steel **AISI 431**
7	**Electric motor**	**SKRm**: single-phase 230 V - 50 Hz with winding integrated thermal motor protection **SKR**: three-phase 230/400 V - 50 Hz ※ Pumps are equipped with high-efficiency motors (IEC 60034-30-1) class **IE2** for single-phase models class **IE3** for three-phase models Continuous running duty **S1**

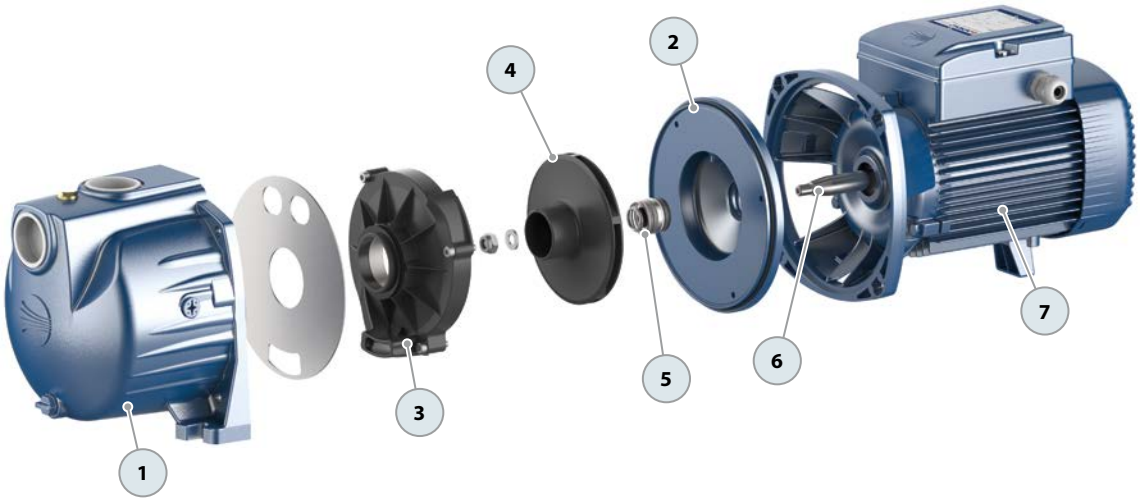

PLURIJET Multi-stage self-priming pumps

Clean water
Domestic use
Civil use

※ VERSATILE

PLURIJET pumps are designed to handle any domestic water task with ease. With exceptional suction capacity, they can prime up to 9 metres deep, making them perfect for any household water requirement.

※ EFFICIENT

Get the job done efficiently with PLURIJET pumps. Their high hydraulic efficiency means they consume significantly less electricity compared to self-priming JET pumps, ensuring you have all the water you need without draining your power supply.

※ RELIABLE

Stainless steel components that you can count on for reliability and durability.

※ SILENT

Featuring multi-cellular hydraulics for maximum pressure with minimal power consumption, these pumps are significantly quieter, with noise levels between 48 and 54 dBA.

PERFORMANCE RANGE

- Flow rate up to **130 l/min** (7.8 m³/h)
- Head up to **52 m**

INSTALLATION AND USE

PLURIJET self-priming pumps are designed to transfer clean water free from abrasive particles and liquids that will not damage the pump's components. They are suitable for both domestic and civil applications, particularly for water distribution along pressure tanks to increase overall network pressure, rainwater recovery, and irrigation.

ELECTRIC MOTOR

Three-phase pumps are equipped with high-efficiency motors (IEC 60034-30-1).
Efficiency class **IE3** for three-phase motors and **IE2** for single-phase motors, with class F insulation and IPX4 protection.

APPLICATION LIMITS

- Manometric suction head up to **9 m** (HS)
- Liquid temperature between **-10 °C** and **+60 °C**
- Ambient temperature up to **+40 °C**
- Maximum working pressure **6 bar**

AVAILABLE UPON REQUEST

※ Technopolymer impeller (cost-effective version)
※ Different voltage requirements 60 Hz frequency

PATENTS - TRADE MARKS - MODELS

- PLURIJET® Registered trademark No. 3974301
- Patent Pending No. 102023000019836

CURVES AND PERFORMANCE DATA – HS=0 m

50 Hz

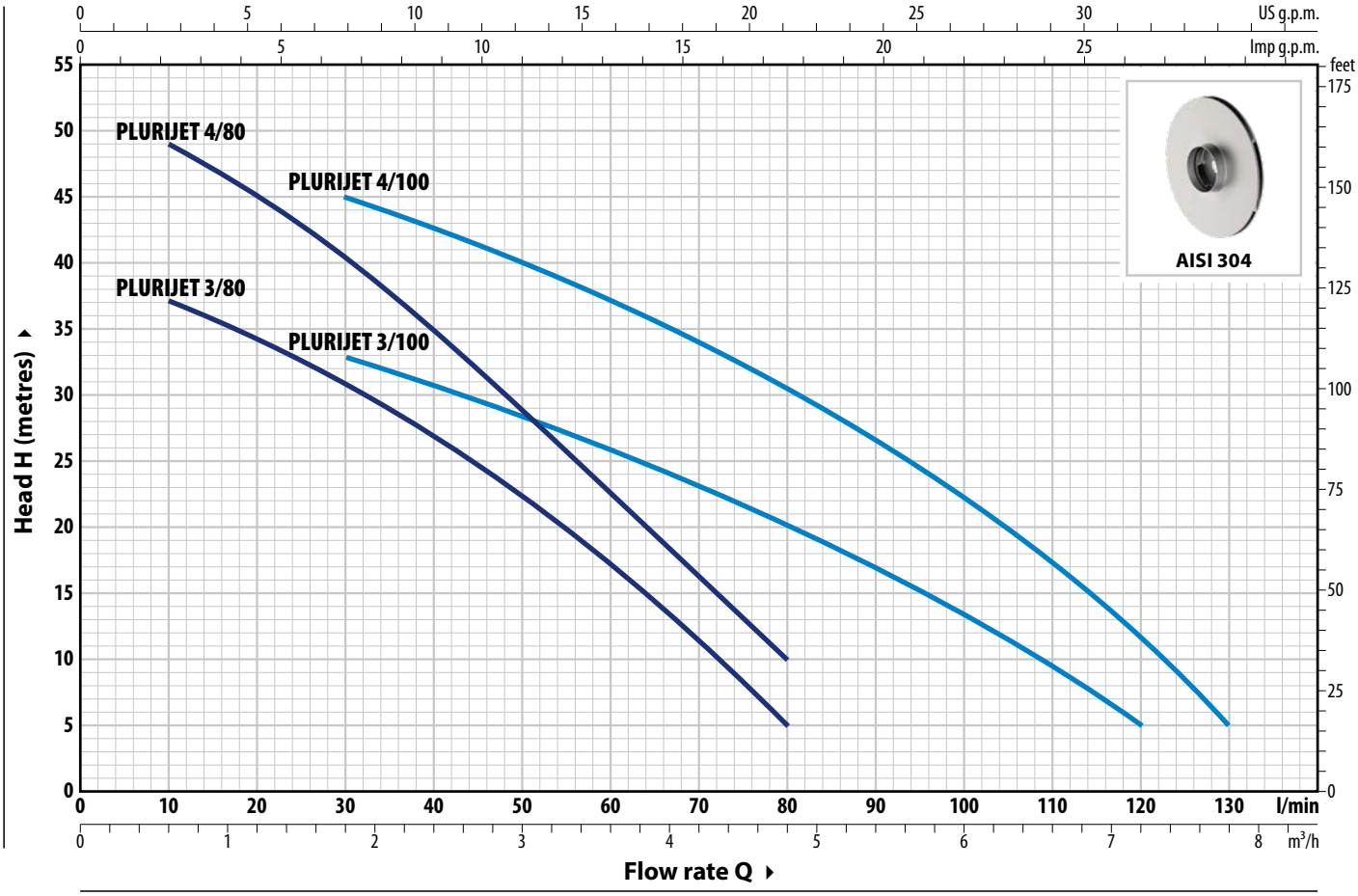

TYPE		POWER (P2)				Q m³/h	0	0.3	0.6	1.2	1.8	2.4	3.0	3.6	4.2	4.8	5.4	6.0	6.6	7.2	7.8
Single-phase	**Three-phase**	**kW**	**HP**	**1~**	**3~**	l/min	**0**	**5**	**10**	**20**	**30**	**40**	**50**	**60**	**70**	**80**	**90**	**100**	**110**	**120**	**130**
PLURIJETm 3/80	**PLURIJET 3/80**	0.48	0.65	**IE2**	**IE3**	**H** metres	40	38	37	34.5	31	27	22.5	17	11	5					
PLURIJETm 4/80	**PLURIJET 4/80**	0.55	0.75				52	50	49	44.5	40	34	28.5	22.5	16	10					
PLURIJETm 3/100	**PLURIJET 3/100**	0.55	0.75				38	37	36	34.5	33	31	28	26	23	20	17	13.5	10	5	
PLURIJETm 4/100	**PLURIJET 4/100**	0.75	1				50	50	49	47	45	42	39.5	37	34	30.5	26.5	22	17	11	5

Q = Flow rate **H** = Total manometric head **HS** = Suction height

Performance curves comply with EN ISO 9906 Grade 3B tolerance limits.

EXAMPLE OF INSTALLATION

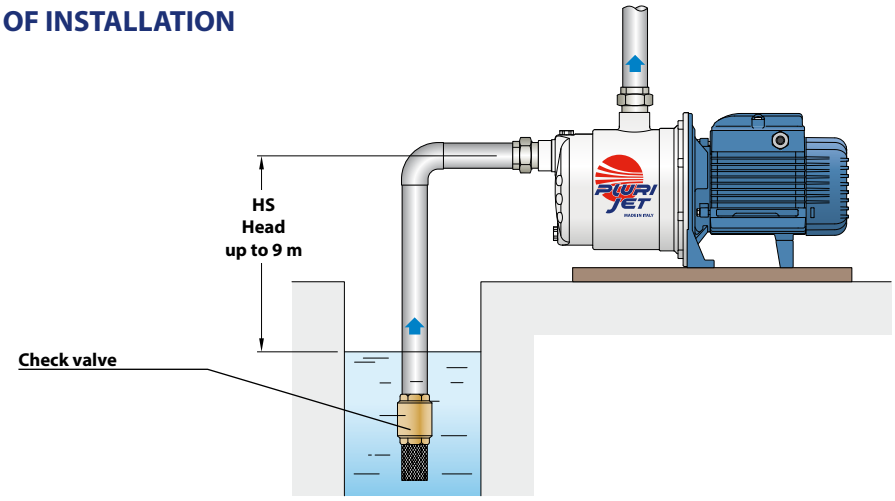

ABSORPTION

TYPE	VOLTAGE
Single-phase	**230 V**
PLURIJETm 3/80	3.2 A
PLURIJETm 4/80	3.9 A
PLURIJETm 3/100	4.1 A
PLURIJETm 4/100	5.8 A

TYPE	VOLTAGE	
Three-phase	**230 V - Δ**	**400 V - ⅄**
PLURIJET 3/80	2.6 A	1.5 A
PLURIJET 4/80	3.5 A	2.0 A
PLURIJET 3/100	3.5 A	2.0 A
PLURIJET 4/100	4.0 A	2.3 A

DIMENSIONS AND WEIGHT

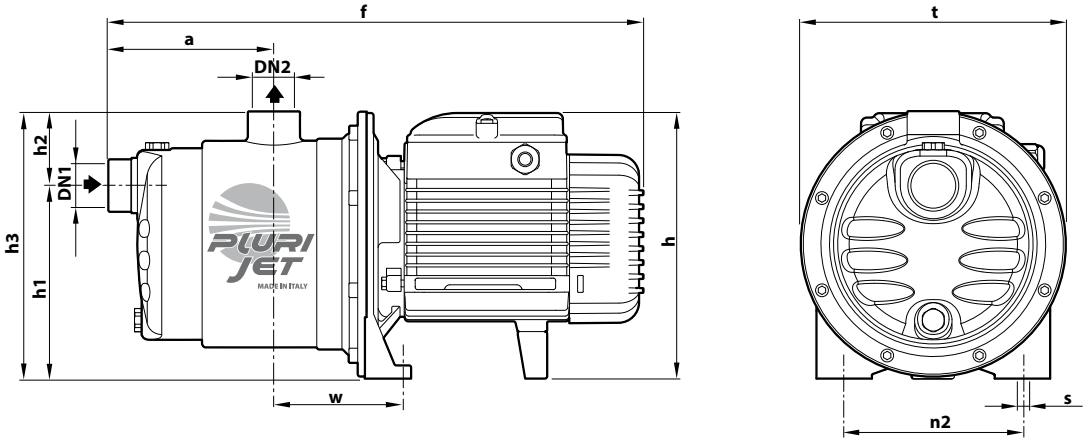

TYPE		PORTS		DIMENSIONS mm										kg	
Single-phase	**Three-phase**	**DN1**	**DN2**	a	f	h	h1	h2	h3	t	n2	w	s	1~	3~
PLURIJETm 3/80	**PLURIJET 3/80**	**1"**	**1"**	113	367	182	132	51	183	182	120	87	9	7.8	7.8
PLURIJETm 4/80	**PLURIJET 4/80**			138	392									9.1	8.4
PLURIJETm 3/100	**PLURIJET 3/100**			113	367									8.6	7.9
PLURIJETm 4/100	**PLURIJET 4/100**			138	410	202 *							10	11.6	11.6

(*) h=221 mm for single-phase 110 V versions

PALLET CAPACITY

TYPE		NO. OF PUMPS
Single-phase	**Three-phase**	
PLURIJETm 3/80	**PLURIJET 3/80**	84
PLURIJETm 4/80	**PLURIJET 4/80**	72
PLURIJETm 3/100	**PLURIJET 3/100**	84
PLURIJETm 4/100	**PLURIJET 4/100**	72

MATERIALS AND COMPONENTS

1	**Pump body**	Stainless steel **AISI 304**,provided with ISO 228/1 threaded ports
2	**Cover**	Stainless steel **AISI 304**
3	**Impellers**	Stainless steel **AISI 304**
4	**Diffusers**	Noryl™ complete with wear rings
5	**Mechanical seal**	

Seal	Shaft	Materials
AR-13	Ø 13 mm	Ceramic / Graphite / NBR

6	**Motor shaft**	Stainless steel **AISI 431**
7	**Electric motor**	**PLURIJETm**: single-phase 230 V - 50 Hz with winding integrated thermal motor protection **PLURIJET**: three-phase 230/400 V - 50 Hz ※ Pumps are equipped with high-efficiency motors (IEC 60034-30-1) class **IE2** for single-phase models class **IE3** for three-phase models Continuous running duty **S1**

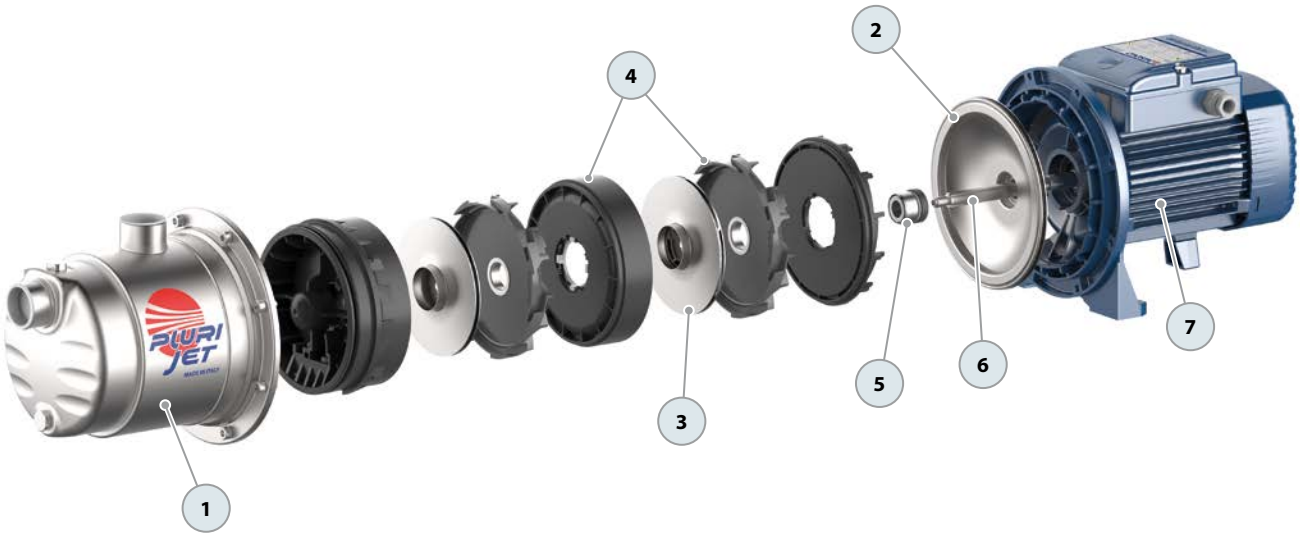

PLURIJET Multi-stage self-priming pumps

Clean water

Domestic use

Civil use

※ PLURIJET high-efficiency pumps with stainless steel impellers are as essential as water. Thanks to their reliability, quiet operation, and cost-effectiveness, they provide the best and most effective solution for your domestic needs.

※ VERSATILE

PLURIJET pumps are designed to handle any domestic water task with ease. With exceptional suction capacity, they can prime up to 9 metres deep, making them perfect for any household water requirement.

※ EFFICIENT

Get the job done efficiently with PLURIJET pumps. Their high hydraulic efficiency means they consume significantly less electricity compared to self-priming JET pumps, ensuring you have all the water you need without draining your power supply.

※ SILENT

Featuring multi-cellular hydraulics for maximum pressure with minimal power consumption, these pumps operate with significantly reduced noise levels, ensuring a quiet performance.

PERFORMANCE RANGE

- Flow rate up to **130 l/min** (7.8 m³/h)
- Head up to **52 m**

INSTALLATION AND USE

Designed to transfer clean water free from abrasive particles and safe liquids that will not damage any of the pump's components. Highly reliable and quiet, they are suitable for domestic applications.
They work seamlessly with small to medium-sized pressure tanks, offering an ideal setup for all irrigation requirements.

ELECTRIC MOTOR

The three-phase pumps are equipped with newly developed electric motors designed to work with inverters, which guarantee stable and quiet operation.

Efficiency class **IE3** for three-phase motors and **IE2** for single-phase motors, with class F insulation and IPX4 protection.

APPLICATION LIMITS

- Manometric suction head up to **9 m** (HS)
- Liquid temperature between **-10 °C** and **+60 °C**
- Ambient temperature up to **+40 °C**
- Maximum working pressure **6 bar**

AVAILABLE UPON REQUEST

※ Mechanical seal options available
※ Different voltage requirements 60 Hz frequency

PATENTS - TRADE MARKS - MODELS

- **PLURIJET**®Registered trademark No. 3974301
- Patent Pending No. 102023000019836

CURVES AND PERFORMANCE DATA – HS=0 m

50 Hz

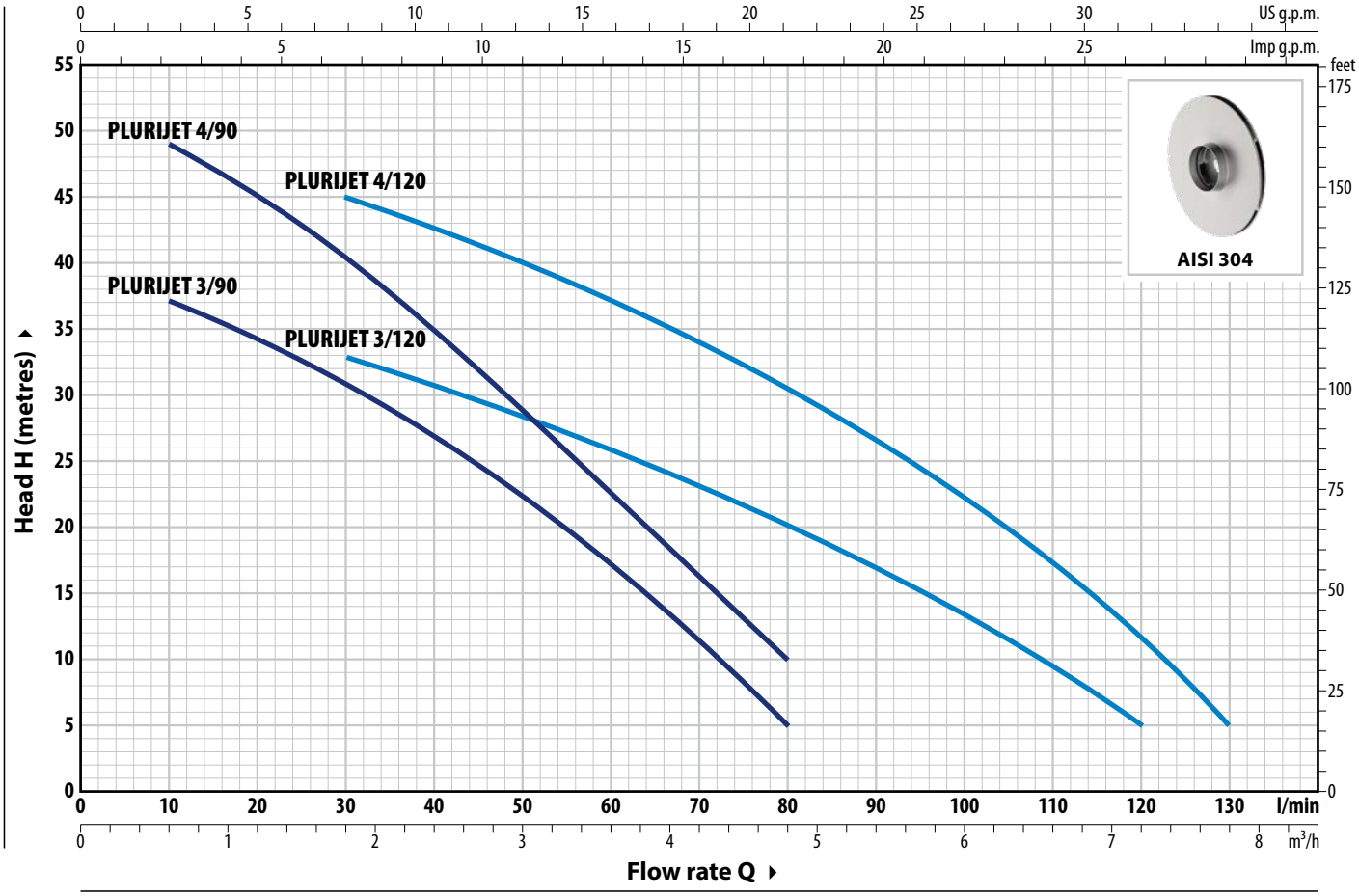

TYPE		POWER (P2)				Q m³/h	0	0.3	0.6	1.2	1.8	2.4	3.0	3.6	4.2	4.8	5.4	6.0	6.6	7.2	7.8
Single-phase	**Three-phase**	**kW**	**HP**	**1~**	**3~**	l/min	**0**	**5**	**10**	**20**	**30**	**40**	**50**	**60**	**70**	**80**	**90**	**100**	**110**	**120**	**130**
PLURIJETm 3/90	**PLURIJET 3/90**	0.48	0.65	**IE2**	**IE3**	**H** metres	40	38	37	34.5	31	27	22.5	17	11	5					
PLURIJETm 4/90	**PLURIJET 4/90**	0.55	0.75				52	50	49	44.5	40	34	28.5	22.5	16	10					
PLURIJETm 3/120	**PLURIJET 3/120**	0.55	0.75				38	37	36	34.5	33	31	28	26	23	20	17	13.5	10	5	
PLURIJETm 4/120	**PLURIJET 4/120**	0.75	1				50	50	49	47	45	42	39.5	37	34	30.5	26.5	22	17	11	5

Q = Flow rate **H** = Total manometric head **HS** = Suction height

Performance curves comply with EN ISO 9906 Grade 3B tolerance limits.

EXAMPLE OF INSTALLATION

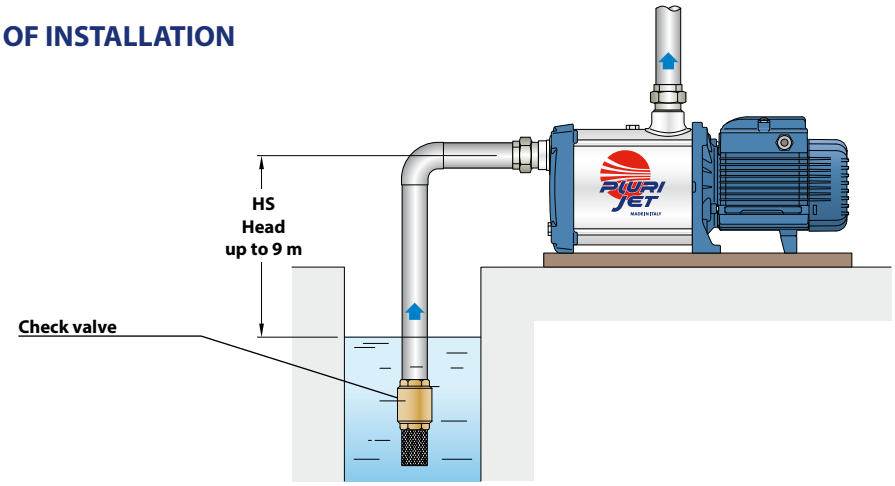

ABSORPTION

TYPE **Single-phase**	VOLTAGE **230 V**
PLURIJETm 3/90	3.2 A
PLURIJETm 4/90	3.9 A
PLURIJETm 3/120	3.9 A
PLURIJETm 4/120	5.8 A

TYPE **Three-phase**	VOLTAGE **230 V - Δ**	**400 V - ⅄**
PLURIJET 3/90	2.2 A	1.3 A
PLURIJET 4/90	2.9 A	1.7 A
PLURIJET 3/120	2.9 A	1.7 A
PLURIJET 4/120	4.0 A	2.3 A

DIMENSIONS AND WEIGHT

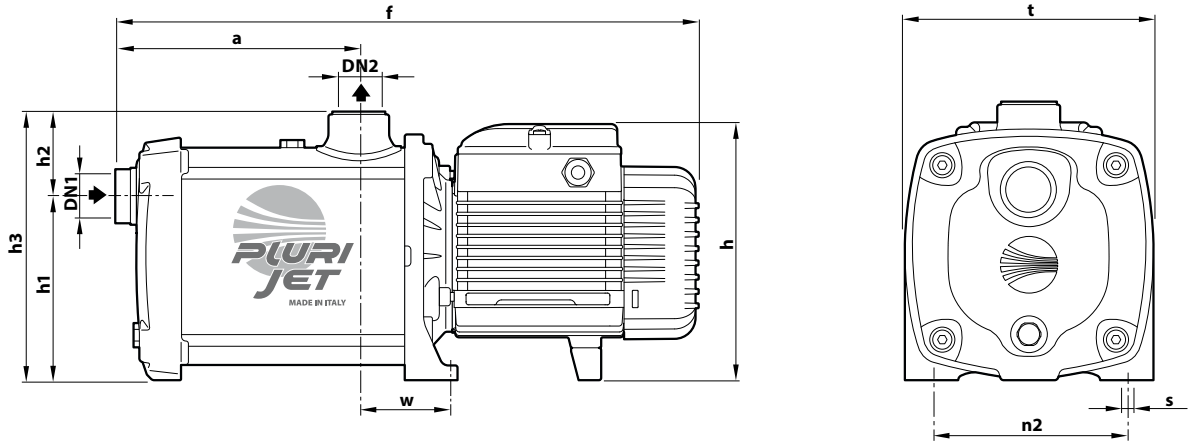

TYPE		PORTS		DIMENSIONS mm										kg	
Single-phase	**Three-phase**	**DN1**	**DN2**	a	f	h	h1	h2	h3	t	n2	w	s	1~	3~
PLURIJETm 3/90	**PLURIJET 3/90**	**1"**	**1"**	132	358	171	122	56	178	160	125	56.5	9	8.4	8.4
PLURIJETm 4/90	**PLURIJET 4/90**			157	383									9.7	9.0
PLURIJETm 3/120	**PLURIJET 3/120**			132	358									9.2	8.5
PLURIJETm 4/120	**PLURIJET 4/120**			157	402	189								12.2	12.2

(*) h=221 mm for single-phase 110 V versions

MATERIALS AND COMPONENTS

1	**Pump body**	Stainless steel **AISI 304**,provided with ISO 228/1 threaded ports
2	**Cover**	Stainless steel **AISI 304**
3	**Impellers**	Stainless steel **AISI 304**
4	**Diffusers**	Noryl™ complete with wear rings

5 Mechanical seal

Seal	Shaft	Materials
AR-13	Ø 13 mm	Ceramic / Graphite / NBR

6	**Motor shaft**	Stainless steel **AISI 431**

7 Electric motor

PLURIJETm: single-phase 230 V - 50 Hz with winding integrated thermal motor protection
PLURIJET: three-phase 230/400 V - 50 Hz

※ Pumps are equipped with high-efficiency motors (IEC 60034-30-1)
class **IE2** for single-phase models
class **IE3** for three-phase models

Continuous running duty **S1**

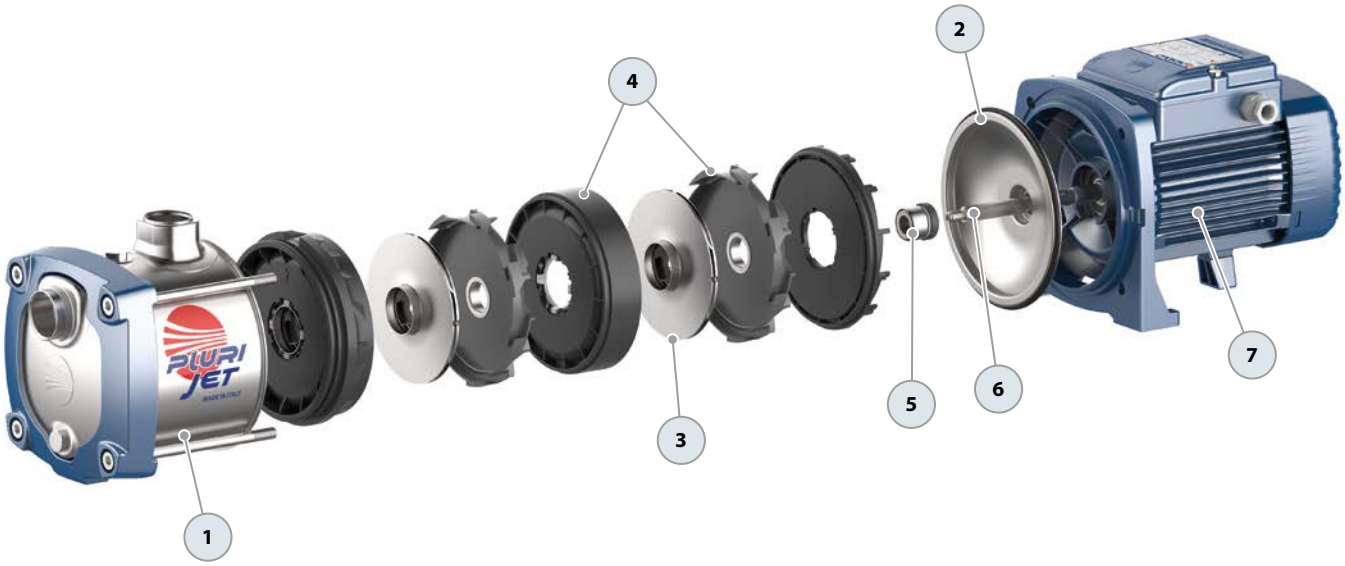

PLURIJET Multi-stage self-priming pumps

Clean water

Domestic use

Civil use

※ PLURIJET high-efficiency pumps with stainless steel impellers are as essential as water. Thanks to their reliability, quiet operation, and cost-effectiveness, they provide the best and most effective solution for your domestic needs.

PERFORMANCE RANGE

- Flow rate up to **200 l/min** (12 m³/h)
- Head up to **97 m**

INSTALLATION AND USE

PLURIJET self-priming pumps are designed to draw water and liquids that contain air, and clean water and liquids that will not damage the pump's components. Reliable and energy-efficient, they are suitable for both domestic and civil applications, particularly for water distribution along pressure tanks to increase overall network pressure, rainwater recovery, and irrigation.

ELECTRIC MOTOR

The three-phase pumps are equipped with newly developed electric motors designed to work with inverters, which guarantee stable and quiet operation.

Efficiency class **IE3** for three-phase motors and **IE2** for single-phase motors, with class F insulation and IPX4 protection.

APPLICATION LIMITS

- Manometric suction head up to **9 m** (HS)
- Liquid temperature between **-10 °C** and **+40 °C**
- Ambient temperature up to **+40 °C**
- Maximum working pressure **10 bar**

AVAILABLE UPON REQUEST

※ Technopolymer impeller (cost-effective version)
※ Different voltage requirements 60 Hz frequency
※ IPX5 protection
※ Certified pumps WRAS APPROVED PRODUCT

PATENTS - TRADE MARKS - MODELS

- PLURIJET® Registered trademark No. 3974301
- Patent Pending No. 102023000019836

CURVES AND PERFORMANCE DATA – HS=0 m

50 Hz

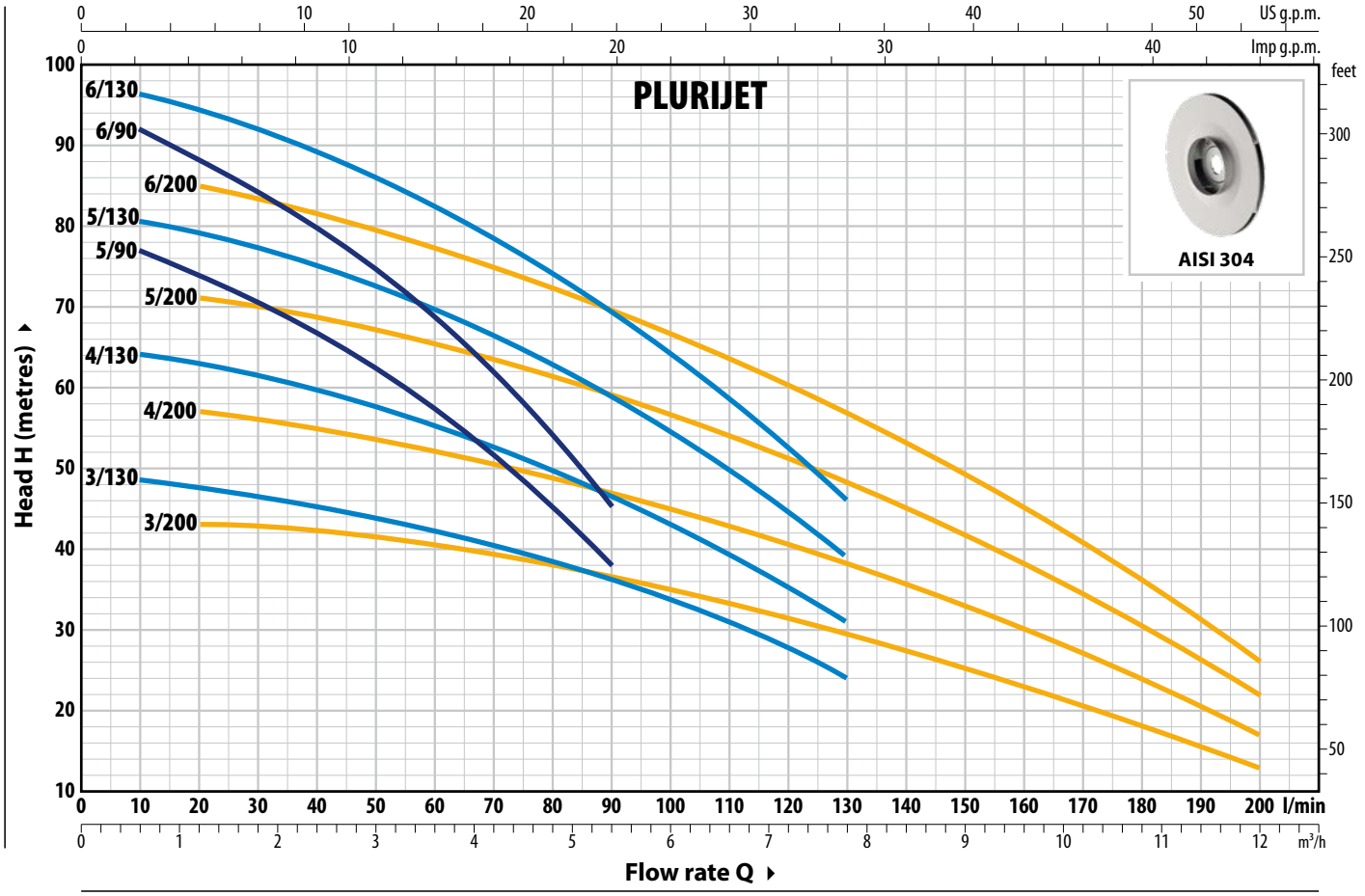

TYPE		POWER (P2)				Q m³/h	0	0.3	0.6	1.2	2.4	3.6	5.4	6.0	7.8	8.4	9.6	10.8	12.0
Single-phase	**Three-phase**	**kW**	**HP**	**1~**	**3~**	**Q l/min**	**0**	**5**	**10**	**20**	**40**	**60**	**90**	**100**	**130**	**140**	**160**	**180**	**200**
PLURIJETm 5/90	**PLURIJET 5/90**	1.1	1.5				80	78	77	74	67	57	38						
PLURIJETm 6/90	**PLURIJET 6/90**	1.5	2				96	94	92	88	80	69	45						
PLURIJETm 3/130	**PLURIJET 3/130**	1.1	1.5				49	49	48.5	47.5	45	42.5	36	33.5	24				
PLURIJETm 4/130	**PLURIJET 4/130**	1.5	2				65	65	64	63	60	56	46	43	31				
PLURIJETm 5/130	**PLURIJET 5/130**	1.8	2.5				81	81	80.5	79	75	70	59	54	39				
–	**PLURIJET 6/130**	2.2	3	**IE2**	**IE3**	**H metres**	97	97	96.5	94.5	90	83	69	64	46				
PLURIJETm 3/200	**PLURIJET 3/200**	1.1	1.5				44	43.5	43.5	43	42	40.5	37	35	29	27.5	23	18	13
PLURIJETm 4/200	**PLURIJET 4/200**	1.5	2				58	57.5	57.5	57	55	52.5	47	45	38	35.5	30	24	17
PLURIJETm 5/200	**PLURIJET 5/200**	1.8	2.5				73	72	71.5	71	69	65.5	59	56.5	48	44.5	38	30	22
–	**PLURIJET 6/200**	2.2	3				87	86	85.5	85	82	78	69	67	57	53	45	36	26

Q = Flow rate **H** = Total manometric head **HS** = Suction height

Performance curves comply with EN ISO 9906 Grade 3B tolerance limits.

EXAMPLE OF INSTALLATION

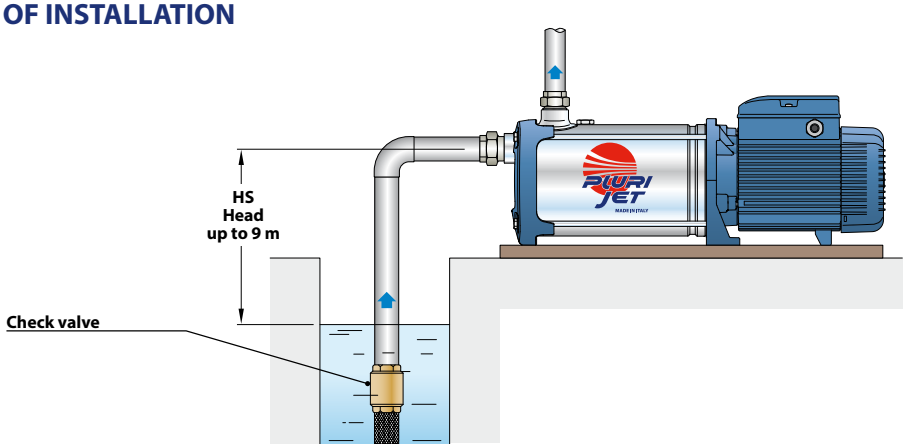

PLURIJET 90-130-200 Technical data

ABSORPTION

TYPE **Single-phase**	VOLTAGE **230 V**
PLURIJETm 5/90	9.3 A
PLURIJETm 6/90	11.0 A
PLURIJETm 3/130	8.5 A
PLURIJETm 4/130	10.3 A
PLURIJETm 5/130	12.5 A
PLURIJETm 3/200	8.7 A
PLURIJETm 4/200	10.5 A
PLURIJETm 5/200	12.5 A

TYPE	VOLTAGE	
Three-phase	**230 V - Δ**	**400 V - ⅄**
PLURIJET 5/90	6.1 A	3.5 A
PLURIJET 6/90	7.3 A	4.2 A
PLURIJET 3/130	5.5 A	3.2 A
PLURIJET 4/130	6.9 A	4.0 A
PLURIJET 5/130	9.0 A	5.2 A
PLURIJET 6/130	9.9 A	5.7 A
PLURIJET 3/200	5.9 A	3.4 A
PLURIJET 4/200	7.3 A	4.2 A
PLURIJET 5/200	9.3 A	5.4 A
PLURIJET 6/200	10.2 A	5.9 A

DIMENSIONS AND WEIGHT

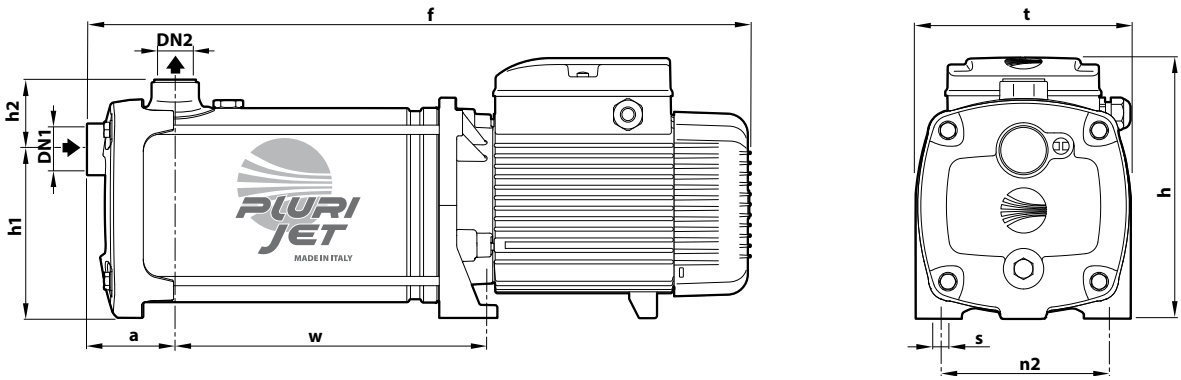

TYPE		PORTS		DIMENSIONS mm									kg	
Single-phase	**Three-phase**	**DN1**	**DN2**	a	f	h	h1	h2	t	n2	w	s	1~	3~
PLURIJETm 5/90	**PLURIJET 5/90**				549						243		20.8	20.8
PLURIJETm 6/90	**PLURIJET 6/90**				573						269		22.8	22.8
PLURIJETm 3/130	**PLURIJET 3/130**				497						191		18.8	18.8
PLURIJETm 4/130	**PLURIJET 4/130**				523						217		20.8	20.8
PLURIJETm 5/130	**PLURIJET 5/130**	**1¼"**	**1"**	75	569	228	145	59	185	145	243	11	24.2	24.2
–	**PLURIJET 6/130**				595						269		–	25.2
PLURIJETm 3/200	**PLURIJET 3/200**				497						191		18.8	18.8
PLURIJETm 4/200	**PLURIJET 4/200**				523						217		20.7	20.7
PLURIJETm 5/200	**PLURIJET 5/200**				569						243		24.2	24.2
–	**PLURIJET 6/200**				595						269		–	25.2

MATERIALS AND COMPONENTS

1	**Pump body**	Stainless steel **AISI 304**,provided with ISO 228/1 threaded ports
2	**Cover**	Stainless steel **AISI 304**
3	**Impellers**	Stainless steel **AISI 304**
4	**Diffusers**	Stainless steel **AISI 304**
5	**Mechanical seal**	

Seal	Shaft	Materials
FN-18	Ø 18 mm	Graphite / Ceramic / NBR

6	**Motor shaft**	Stainless steel **AISI 431**
7	**Electric motor**	**PLURIJETm**: single-phase 230 V - 50Hz with winding integrated thermal motor protection **PLURIJET**: three-phase 230/400 V - 50 Hz ※ Pumps are equipped with high-efficiency motors (IEC 60034-30-1) class **IE2** for single-phase models class **IE3** for three-phase models Continuous running duty **S1**

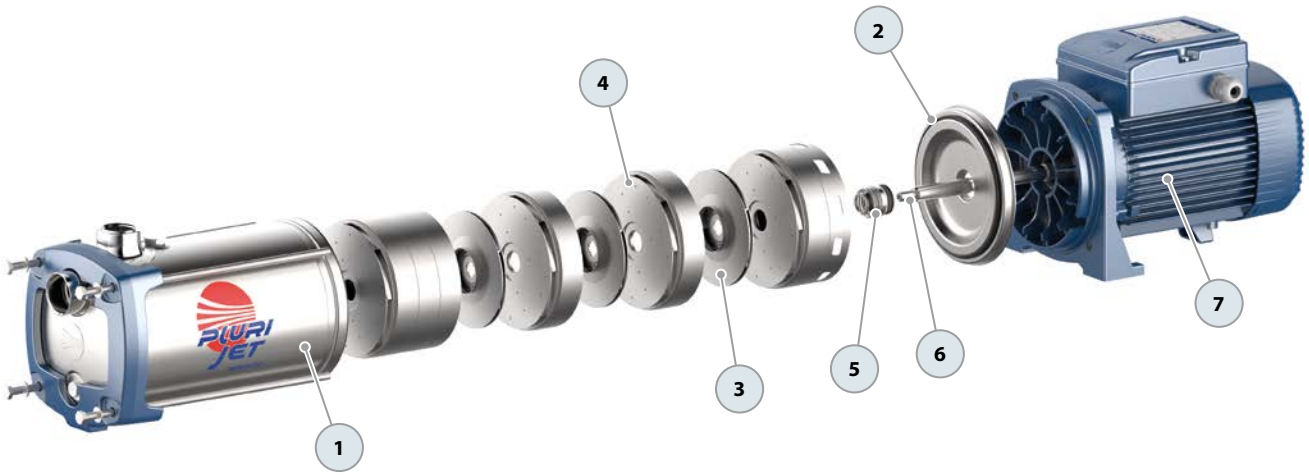

NGA Cast-iron centrifugal pumps with open impeller

Domestic use

Agricultural use

Industrial use

PERFORMANCE RANGE

- Flow rate up to **900 l/min** (54 m³/h)
- Head up to **20.5 m**

INSTALLATION AND USE

Designed to transfer liquids that will not damage the pump's components, NGAS pumps feature an open impeller design.

This allows them to efficiently handle impurity-laden fluids without clogging, making them ideal for various applications including transfers from channels, rivers, tanks, basins, and more.

NGAs pumps are particularly suitable for pumping non-entirely clean liquids, facilitating the movement of solid particles up to **20 mm** in size.

ELECTRIC MOTOR

The three-phase pumps are equipped with newly developed electric motors designed to work with inverters, which guarantee stable and quiet operation.

Efficiency class **IE3** for three-phase motors and **IE2** for single-phase motors, with class F insulation and IPX4 protection.

APPLICATION LIMITS

- Manometric suction head up to **7 m**
- Liquid temperature between **-10 °C** up and **+90 °C**
- Ambient temperature between **-10 °C** and **+40 °C**
- Maximum working pressure:
  - **6 bar** for NGA1 and NGA2
  - **10 bar** for NGA3
- Passing solid in suspension up to:
  - **Ø 12 mm** for NGA1 and NGA2
  - **Ø 20 mm** for NGA3

AVAILABLE UPON REQUEST

※ Mechanical seal options available
※ Pump body with NPT threaded ports ANSI B 1.20.1
※ On request up to **110 °C**
※ **IP X5** protection for **NGA 3**
※ Different voltage requirements 60 Hz frequency

※ Supply of ISO 228/1 flanges for suction and delivery ports in AISI 304 stainless steel

CURVES AND PERFORMANCE DATA – HS=0 m

50 Hz

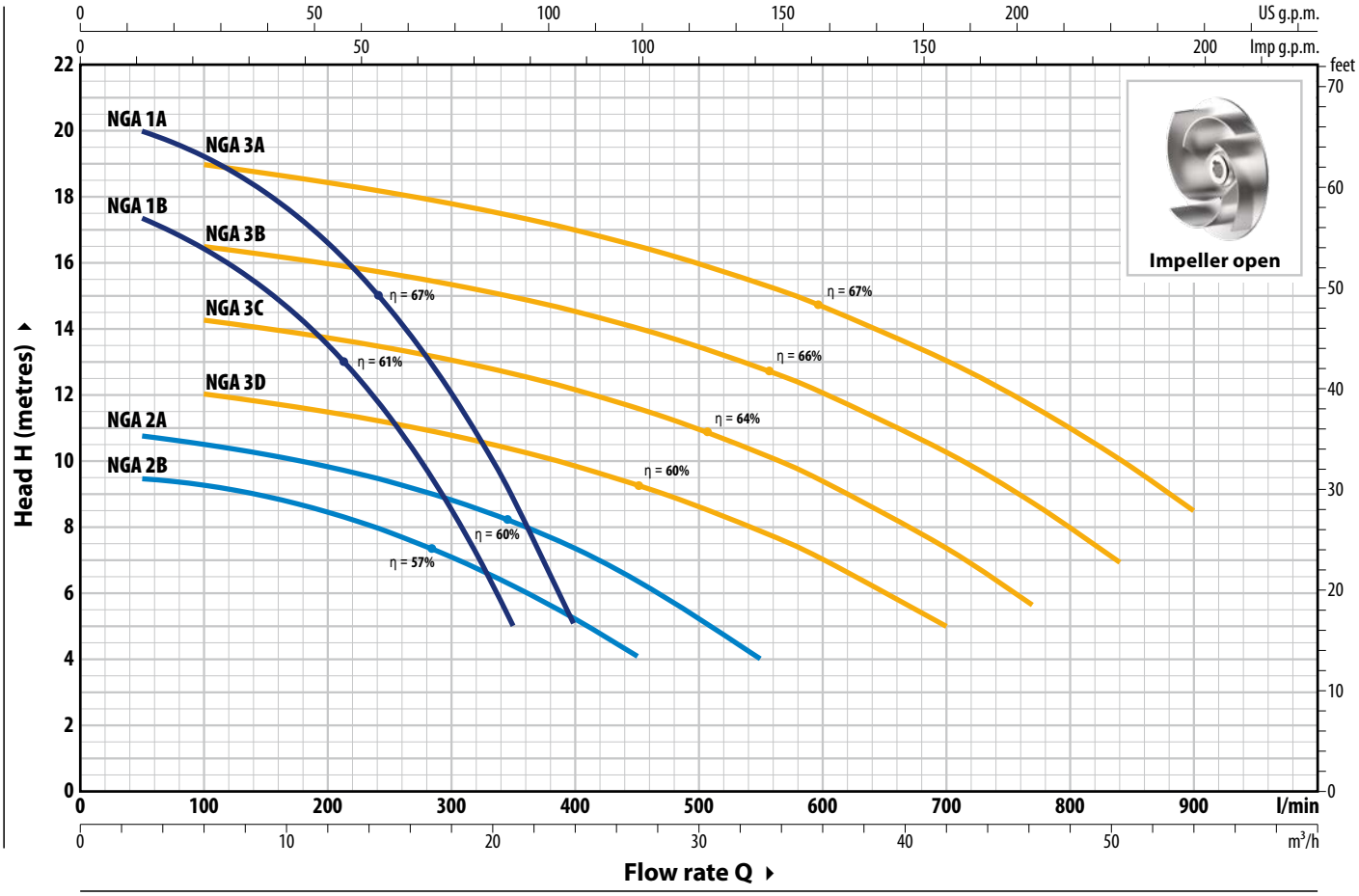

TYPE		POWER (P2)				Q m³/h	0	3	6	9	12	15	18	21	24
Single-phase	**Three-phase**	**kW**	**HP**	**1~**	**3~**	Q l/min	**0**	**50**	**100**	**150**	**200**	**250**	**300**	**350**	**400**
NGAm 1B	**NGA 1B**	0.55	0.75	**IE2**	**IE3**	**H** metres	18	17.4	16.4	15.2	13.5	11.3	8.7	5	
NGAm 1A	**NGA 1A**	0.75	1				20.5	20	19.3	18	16.6	14.7	12	9	5

TYPE		POWER (P2)				Q m³/h	0	3	6	12	18	24	27	33	42	46	51	54
Single-phase	**Three-phase**	**kW**	**HP**	**1~**	**3~**	Q l/min	**0**	**50**	**100**	**200**	**300**	**400**	**450**	**550**	**700**	**770**	**840**	**900**
NGAm 2B	**NGA 2B**	0.55	0.75	**IE2**	**IE3**	**H** metres	9.5	9.4	9.3	8.4	7	5.2	4					
NGAm 2A	**NGA 2A**	0.75	1				11	10.8	10.5	9.8	8.8	7.4	6.4	4				
NGAm 3D	**NGA 3D**	1.1	1.5				12.5	–	12	11.5	10.8	9.8	9.3	7.8	5			
NGAm 3C	**NGA 3C**	1.5	2				14.8	–	14.4	13.8	13.1	12.2	11.7	10.3	7.4	5.7		
NGAm 3B	**NGA 3B**	1.8	2.5				17	–	16.5	16	15.3	14.5	14	12.8	10.3	8.8	7	
NGAm 3A	**NGA 3A**	2.2	3				19.5	–	19	18.4	17.8	17	16.5	15.4	13	11.5	10	8.5

Q = Flow rate **H** = Total manometric head **HS** = Suction height

Performance curves comply with EN ISO 9906 Grade 3B tolerance limits.

ABSORPTION

TYPE	VOLTAGE
Single-phase	**230 V**
NGAm 1B	5.5 A
NGAm 1A	6.0 A
NGAm 2B	5.0 A
NGAm 2A	5.7 A
NGAm 3D	7.5 A
NGAm 3C	9.5 A
NGAm 3B	10.5 A
NGAm 3A	12.5 A

TYPE	VOLTAGE	
Three-phase	**230 V - Δ**	**400 V - ⅄**
NGA 1B	3.8 A	2.2 A
NGA 1A	4.2 A	2.4 A
NGA 2B	3.5 A	2.0 A
NGA 2A	4.0 A	2.3 A
NGA 3D	5.0 A	2.9 A
NGA 3C	6.1 A	3.5 A
NGA 3B	7.8 A	4.5 A
NGA 3A	8.3 A	4.8 A

DIMENSIONS AND WEIGHT

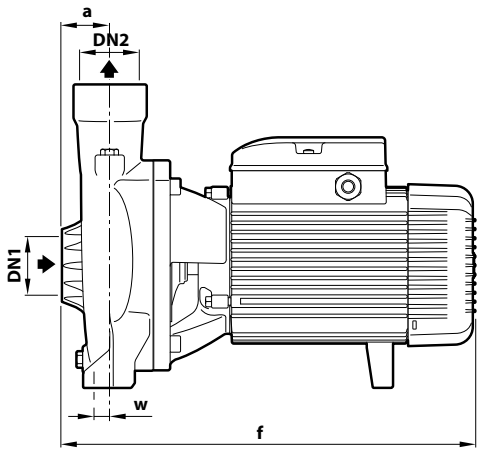

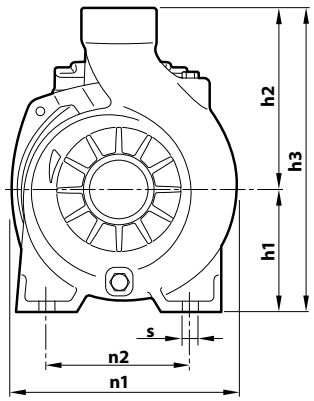

WITH THREADED PORTS

TYPE		PORTS		DIMENSIONS mm									kg	
Single-phase	**Three-phase**	**DN1**	**DN2**	a	f	h1	h2	h3	n1	n2	w	s	1~	3~
NGAm 1B	**NGA 1B**	**1½"**	**1½"**	40	299	92	135	227	190	160	6	11	12.6	12.6
NGAm 1A	**NGA 1A**												12.7	12.6
NGAm 2B	**NGA 2B**			32									12.7	12.6
NGAm 2A	**NGA 2A**												12.7	12.6
NGAm 3D	**NGA 3D**	**2"**	**2"**	48	387	120	178	298	217	140	18	11.5	22.0	21.2
NGAm 3C	**NGA 3C**												22.9	22.9
NGAm 3B	**NGA 3B**				407								25.4	25.5
NGAm 3A	**NGA 3A**												25.5	25.5

WITH FLANGED PORTS

TYPE		PORTS		DIMENSIONS mm				
Single-phase	**Three-phase**	**DN1**	**DN2**	a	f	h1	h2	h3
NGAm 1B	**NGA 1B**	**40**	**40**	60	334	92	156	248
NGAm 1A	**NGA 1A**							
NGAm 2B	**NGA 2B**			52	342			
NGAm 2A	**NGA 2A**							
NGAm 3D	**NGA 3D**	**50**	**50**	70	408	120	200	320
NGAm 3C	**NGA 3C**							
NGAm 3B	**NGA 3B**				428			
NGAm 3A	**NGA 3A**							

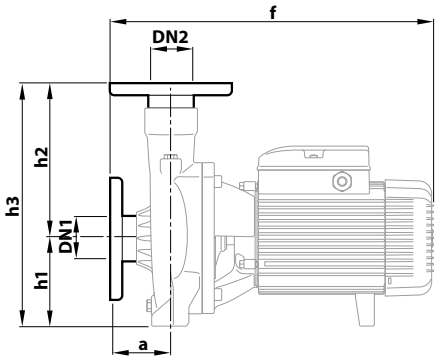

FLANGE	D	K	F	HOLES	
DN	mm	mm	mm	N°	Ø (mm)
40	150	110	78	4	18
50	165	125	99	4	18

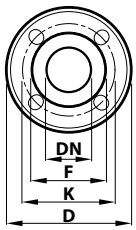

MATERIALS AND COMPONENTS

1	**Pump body**	Cast iron JL 250 with cataphoresis treatment with ISO 228/1 threaded ports
2	**Cover**	Cast iron JL 200 for NGA3 **AISI 304** stainless steel for NGA1 and NGA2
3	**Impeller**	Open impeller in **AISI 316** stainless steel (from January 2024)

4 Mechanical seal

Water pump	Seal	Shaft	Materials
NGA1 NGA2	**AR-14**	Ø 14 mm	Ceramic / Graphite / NBR
NGA3	**FN-18**	Ø 18 mm	Graphite / Ceramic / NBR

5	**Motor shaft**	Stainless steel **AISI 431**
6	**Electric motor**	**NGAm**: single-phase 230 V - 50Hz with winding integrated thermal motor protection **NGA**: three-phase 230/400 V - 50 Hz ※ Pumps are equipped with high-efficiency motors (IEC 60034-30-1) class **IE2** for single-phase models class **IE3** for three-phase models Continuous running duty **S1**

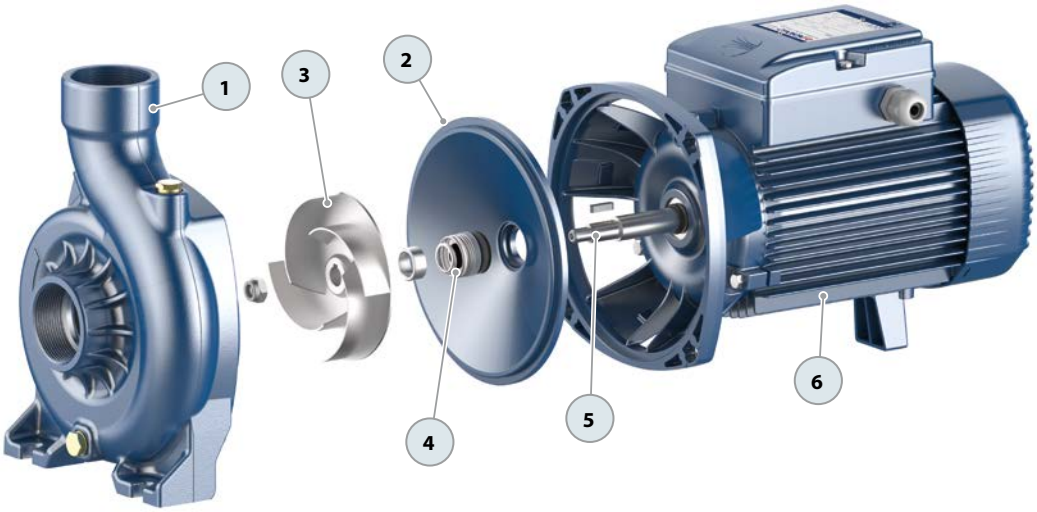

NGA-PRO Stainless steel pumps with open impeller

Civil use

Agricultural use

Industrial use

※ **Pump entirely made of AISI316 stainless steel**

PERFORMANCE RANGE

- Flow rate up to **900 l/min** (54 m³/h)
- Head up to **20.5 m**

INSTALLATION AND USE

Designed to transfer liquids that will not damage the pump's components, NGA-PRO pumps feature an open impeller design. This allows them to efficiently handle impurity-laden fluids without clogging, making them ideal for various applications including transfers from channels, rivers, tanks, basins, and more.

All components in contact with pumped liquids are constructed from **AISI 316** stainless steel.

NGA-PRO pumps are particularly suitable for pumping non-entirely clean liquids, facilitating the movement of solid particles up to **20 mm** in size.

ELECTRIC MOTOR

The three-phase pumps are equipped with newly developed electric motors designed to work with inverters, which guarantee stable and quiet operation.

Efficiency class **IE3** for three-phase motors and **IE2** for single-phase motors, with class F insulation and IPX4 protection.

APPLICATION LIMITS

- Manometric suction head up to **7 m**
- Liquid temperature between **-10 °C** and **+90 °C**
- Ambient temperature between **-10 °C** and **+40 °C**
- Maximum working pressure:
  - **6 bar** for NGA1-PRO and NGA2-PRO
  - **10 bar** for NGA3-PRO
- Passing solid in suspension up to:
  - **Ø 12 mm** for NGA1-PRO and NGA2-PRO
  - **Ø 20 mm** for NGA3-PRO

AVAILABLE UPON REQUEST

※ Mechanical seal options available
※ Standardised mechanical seal with anti-rotation (NGA3-PRO)
※ Pump body with NPT threaded ports ANSI B 1.20.1
※ On request up to **110 °C**
※ **IP X5** protection for **NGA 3-PRO**
※ Different voltage requirements 60 Hz frequency

※ ISO 228/1 standard flanges for suction and discharge openings, made of AISI 304 stainless steel

CURVES AND PERFORMANCE DATA – HS=0 m

50 Hz

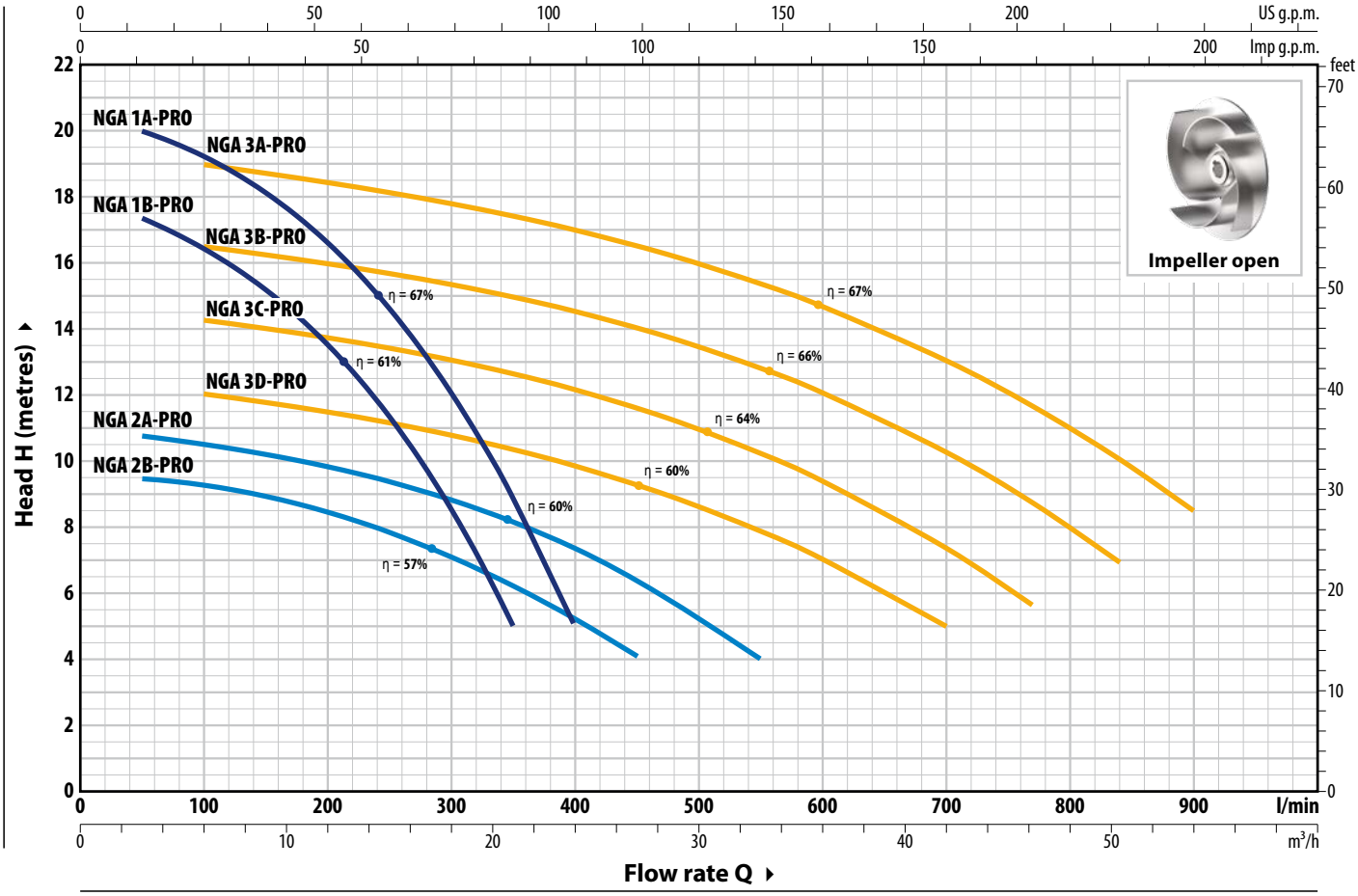

TYPE		POWER (P2)				Q m³/h	0	3	6	9	12	15	18	21	24
Single-phase	**Three-phase**	**kW**	**HP**	**1~**	**3~**	**Q l/min**	**0**	**50**	**100**	**150**	**200**	**250**	**300**	**350**	**400**
NGAm 1B - PRO	**NGA 1B - PRO**	0.55	0.75	**IE2**	**IE3**	**H** metres	18	17.4	16.4	15.2	13.5	11.3	8.7	5	
NGAm 1A - PRO	**NGA 1A - PRO**	0.75	1				20.5	20	19.3	18.1	16.6	14.7	12.1	9	5

TYPE		POWER (P2)				Q m³/h	0	3	6	12	18	24	27	33	42	46	51	54
Single-phase	**Three-phase**	**kW**	**HP**	**1~**	**3~**	**Q l/min**	**0**	**50**	**100**	**200**	**300**	**400**	**450**	**550**	**700**	**770**	**840**	**900**
NGAm 2B - PRO	**NGA 2B - PRO**	0.55	0.75	**IE2**	**IE3**	**H** metres	9.5	9.4	9.3	8.4	7	5.2	4					
NGAm 2A - PRO	**NGA 2A - PRO**	0.75	1				11	10.8	10.5	9.8	8.8	7.4	6.4	4				
NGAm 3D - PRO	**NGA 3D - PRO**	1.1	1.5				12.5	–	12	11.5	10.8	9.8	9.3	7.8	5			
NGAm 3C - PRO	**NGA 3C - PRO**	1.5	2				14.8	–	14.4	13.8	13.1	12.2	11.7	10.3	7.4	5.7		
NGAm 3B - PRO	**NGA 3B - PRO**	1.8	2.5				17	–	16.5	16	15.3	14.5	14	12.8	10.3	8.8	7	
NGAm 3A - PRO	**NGA 3A - PRO**	2.2	3				19.5	–	19	18.4	17.8	17	16.5	15.4	13	11.5	10	8.5

Q = Flow rate **H** = Total manometric head **HS** = Suction height

Performance curves comply with EN ISO 9906 Grade 3B tolerance limits.

ABSORPTION

TYPE	VOLTAGE
Single-phase	**230 V**
NGAm 1B - PRO	5.5 A
NGAm 1A - PRO	6.0 A
NGAm 2B - PRO	5.0 A
NGAm 2A - PRO	5.7 A
NGAm 3D - PRO	7.5 A
NGAm 3C - PRO	9.5 A
NGAm 3B - PRO	10.5 A
NGAm 3A - PRO	12.5 A

TYPE	VOLTAGE	
Three-phase	**230 V - Δ**	**400 V - ⅄**
NGA 1B - PRO	3.8 A	2.2 A
NGA 1A - PRO	4.2 A	2.4 A
NGA 2B - PRO	3.5 A	2.0 A
NGA 2A - PRO	4.0 A	2.3 A
NGA 3D - PRO	5.0 A	2.9 A
NGA 3C - PRO	6.1 A	3.5 A
NGA 3B - PRO	7.8 A	4.5 A
NGA 3A - PRO	8.3 A	4.8 A

DIMENSIONS AND WEIGHT

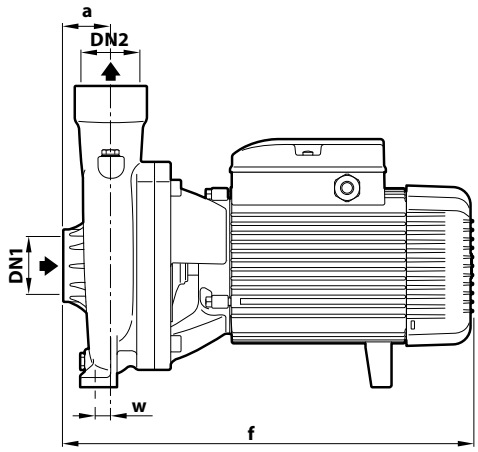

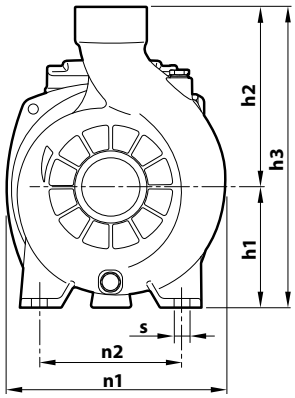

※ WITH THREADED PORTS

TYPE		PORTS		DIMENSIONS mm									kg	
Single-phase	**Three-phase**	**DN1**	**DN2**	a	f	h1	h2	h3	n1	n2	w	s	1~	3~
NGAm 1B - PRO	**NGA 1B - PRO**	**1½"**	**1½"**	40	299	92	135	227	190	160	6	11	12.7	12.7
NGAm 1A - PRO	**NGA 1A - PRO**												12.7	12.7
NGAm 2B - PRO	**NGA 2B - PRO**			32									12.7	12.7
NGAm 2A - PRO	**NGA 2A - PRO**												12.7	12.7
NGAm 3D - PRO	**NGA 3D - PRO**	**2"**	**2"**	48	387	120	178	298	217	140	18	11.5	22.0	21.2
NGAm 3C - PRO	**NGA 3C - PRO**												22.9	22.9
NGAm 3B - PRO	**NGA 3B - PRO**				407								25.4	25.5
NGAm 3A - PRO	**NGA 3A - PRO**												25.5	25.5

※ WITH FLANGED PORTS

TYPE		PORTS		DIMENSIONS mm				
Single-phase	**Three-phase**	**DN1**	**DN2**	a	f	h1	h2	h3
NGAm 1B - PRO	**NGA 1B - PRO**	**40**	**40**	60	334	92	156	248
NGAm 1A - PRO	**NGA 1A - PRO**							
NGAm 2B - PRO	**NGA 2B - PRO**			52	342			
NGAm 2A - PRO	**NGA 2A - PRO**							
NGAm 3D - PRO	**NGA 3D - PRO**	**50**	**50**	70	408	120	200	320
NGAm 3C - PRO	**NGA 3C - PRO**							
NGAm 3B - PRO	**NGA 3B - PRO**				428			
NGAm 3A - PRO	**NGA 3A - PRO**							

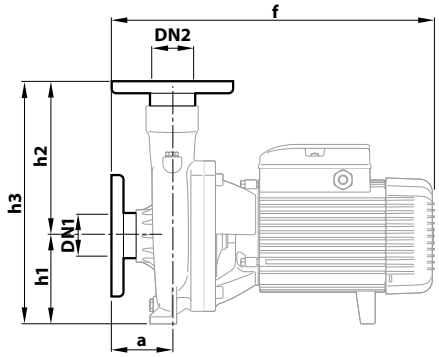

FLANGE	D	K	F	HOLES	
DN	mm	mm	mm	N°	Ø (mm)
40	150	110	78	4	18
50	165	125	99	4	18

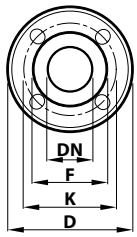

MATERIALS AND COMPONENTS

1	**Pump body**	Stainless steel **AISI 316** with ISO 228/1 threaded ports
2	**Cover**	Stainless steel **AISI 316**
3	**Impeller**	Open impeller in **AISI 316** stainless steel (from January 2024)

4 Mechanical seal

Water pump	Seal	Shaft	Materials
NGA1-PRO NGA2-PRO	**AR-14S**	Ø 14 mm	Ceramic / Graphite / Viton
NGA3-PRO	**FN-18 V6**	Ø 18 mm	Graphite / Ceramic / Viton

5	**Motor shaft**	Stainless steel **AISI 316L**
6	**Electric motor**	**NGAm-PRO**: single-phase 230 V - 50Hz with winding integrated thermal motor protection **NGA-PRO**: three-phase 230/400 V - 50 Hz ※ Pumps are equipped with high-efficiency motors (IEC 60034-30-1) class **IE2** for single-phase models class **IE3** for three-phase models Continuous running duty **S1**

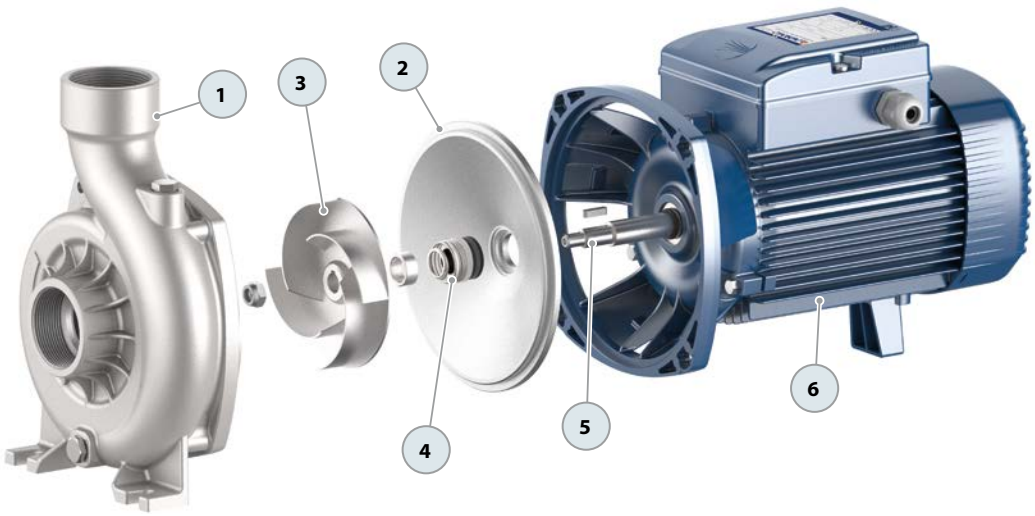

HF Centrifugal pumps

Medium range

Clean water

Agricultural use

Industrial use

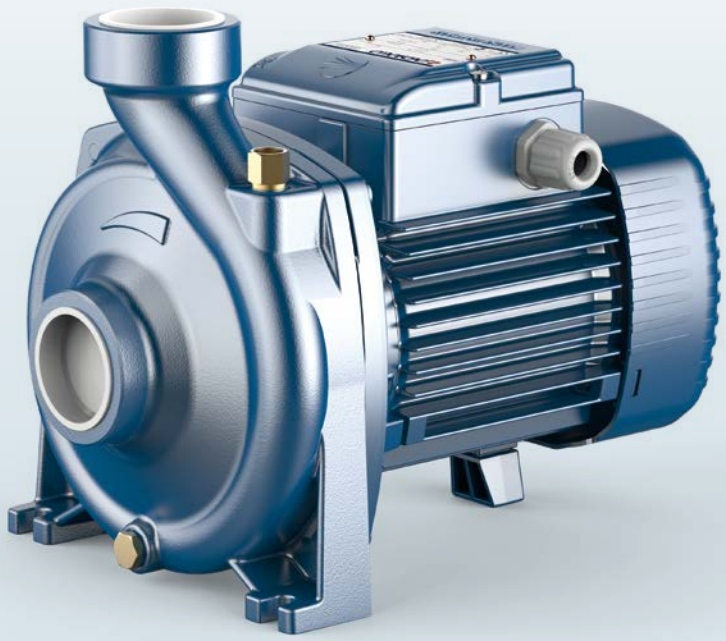

PERFORMANCE RANGE

- Flow rate up to **700 l/min** (42 m³/h)
- Head up to **39 m**

INSTALLATION AND USE

Designed for civil and agricultural use.

Their high-efficiency levels and capability for continuous operation make them an ideal choice for furrow and sprinkler irrigation, in addition to drawing water from lakes, rivers, and wells. They are also suitable for a wide range of industrial applications that require substantial flow rates at medium-low head pressures.

ELECTRIC MOTOR

The three-phase pumps are equipped with newly developed electric motors designed to work with inverters, which guarantee stable and quiet operation.

Efficiency class **IE3** for three-phase motors and **IE2** for single-phase motors, with class F insulation and IPX4 protection.

APPLICATION LIMITS

- Manometric suction head up to **7 m**
- Liquid temperature between **-10 °C** and **+90 °C**
- Ambient temperature up to **+40 °C**
- Maximum working pressure:
  - **6 bar** for HF 5-50-51
  - **10 bar** for HF 5M-70

AVAILABLE UPON REQUEST

※ Mechanical seal options available
※ Different voltage requirements 60 Hz frequency
※ IP X5 protection for HF 5M-70

CURVES AND PERFORMANCE DATA – HS=0 m

50 Hz

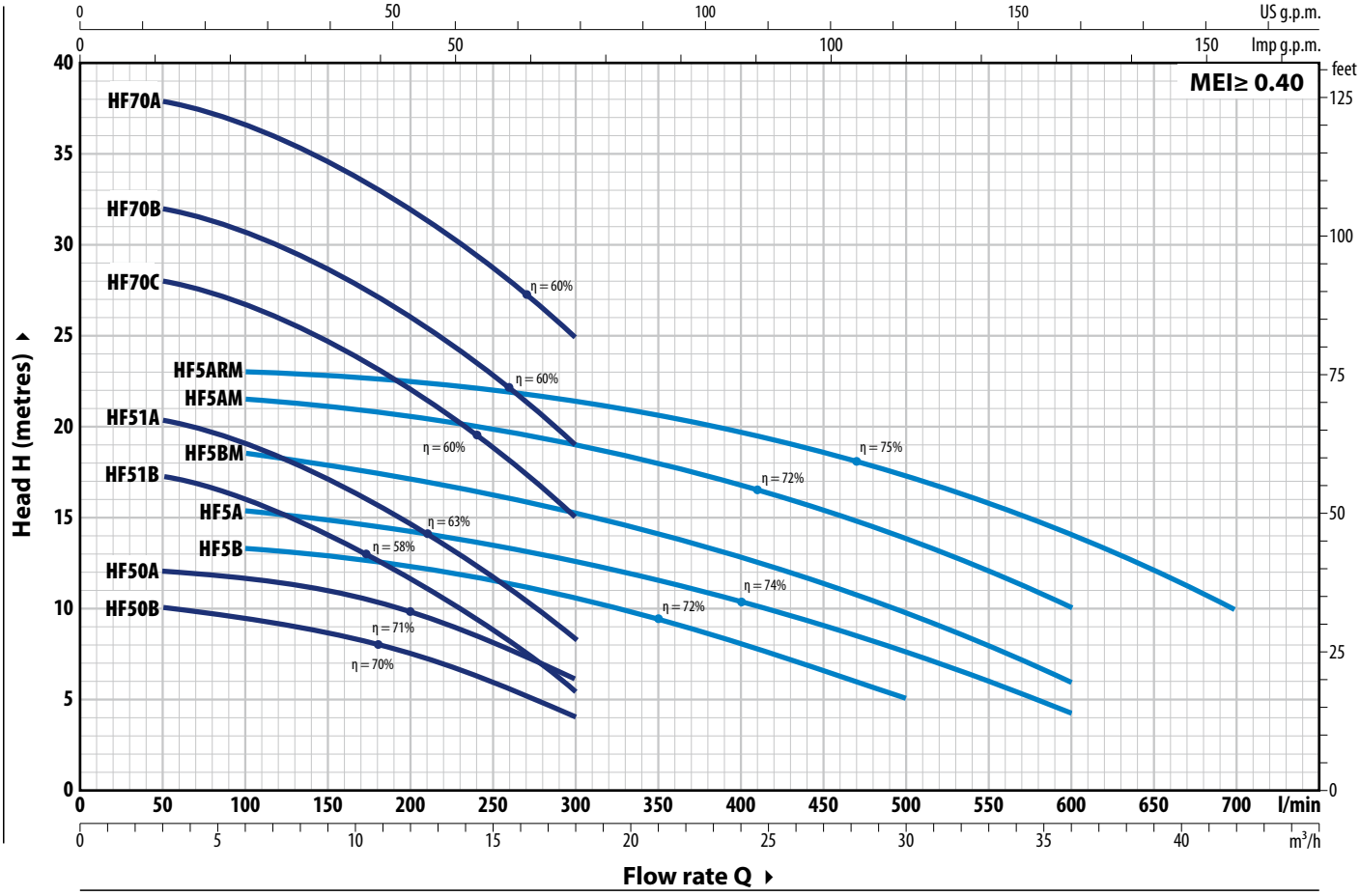

TYPE		POWER (P2)				Q	m³/h	0	3	6	9	12	15	18	21	24	30	36	42
Single-ph.	**Three-ph.**	**kW**	**HP**	**1~**	**3~**		l/min	**0**	**50**	**100**	**150**	**200**	**250**	**300**	**350**	**400**	**500**	**600**	**700**
HFm 50B	**HF 50B**	0.37	0.50					10	10	9.5	8.5	7.5	6	4					
HFm 50A	**HF 50A**	0.55	0.75					12	12	11.5	11	9.6	8	6					
HFm 51B	**HF 51B**	0.55	0.75					18.2	17.2	16	14	11.5	9	5.4					
HFm 51A	**HF 51A**	0.75	1					21.2	20.2	19	17	14.5	11.6	8.4					
HFm 70C	**HF 70C**	1.1	1.5					29	28	26.5	24.5	22	18.5	15					
HFm 70B	**HF 70B**	1.5	2					33	32	30.5	28.5	26	22.5	19					
–	**HF 70A**	2.2	3	**IE2**	**IE3**	**H** metres		39	38	36.5	34.5	32	28.5	25					
HFm 5B	**HF 5B**	0.75	1					13.7	–	13.2	13	12.5	11.6	10.5	9.2	8	5		
HFm 5A	**HF 5A**	0.90	1.25					16	–	15.4	15	14.2	13.5	12.6	11.5	10.4	7.6	4.3	
HFm 5BM	**HF 5BM**	1.1	1.5					19	–	18.5	18	17	16	15.2	14	12.8	9.7	6	
HFm 5AM	**HF 5AM**	1.5	2					22	–	21.5	21	20.5	19.8	19	18	16.8	13.8	10	
HFm 5ARM	**HF 5ARM**	2.2	3					23.5	–	23	22.6	22.2	21.7	21	20.2	19.3	17	13.9	10

Q = Flow rate **H** = Total manometric head **HS** = Suction height

Performance curves comply with EN ISO 9906 Grade 3B tolerance limits.

ABSORPTION

TYPE	VOLTAGE
Single-ph.	**230 V**
HFm 50B	2.8 A
HFm 50A	3.8 A
HFm 51B	4.7 A
HFm 51A	5.6 A
HFm 70C	8.0 A
HFm 70B	10.0 A
HFm 5B	5.0 A
HFm 5A	6.0 A
HFm 5BM	7.7 A
HFm 5AM	10.1 A
HFm 5ARM	11.5 A

TYPE	VOLTAGE	
Three-ph.	**230 V - Δ**	**400 V - ⅄**
HF 50B	2.1 A	1.2 A
HF 50A	2.9 A	1.7 A
HF 51B	3.6 A	2.1 A
HF 51A	4.3 A	2.5 A
HF 70C	6.1 A	3.5 A
HF 70B	7.4 A	4.3 A
HF 70A	9.5 A	5.5 A
HF 5B	3.6 A	2.1 A
HF 5A	4.0 A	2.3 A
HF 5BM	5.7 A	3.3 A
HF 5AM	7.1 A	4.1 A
HF 5ARM	8.0 A	4.6 A

DIMENSIONS AND WEIGHT

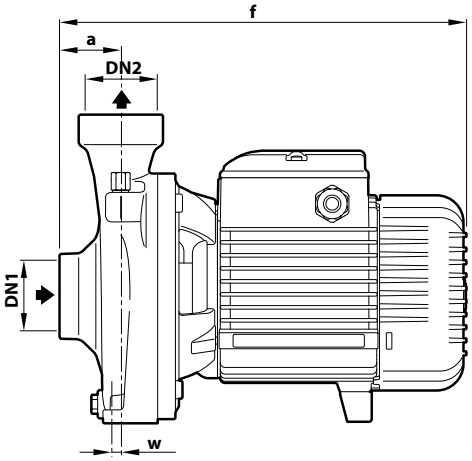

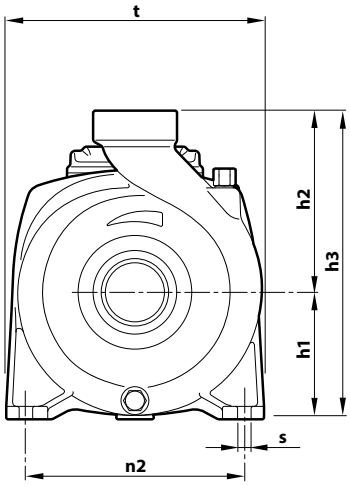

TYPE		PORTS		DIMENSIONS mm									kg	
Single-ph.	**Three-ph.**	**DN1**	**DN2**	a	f	h1	h2	h3	t	n2	w	s	1~	3~
HFm 50B	**HF 50B**	**1½"**	**1½"**	42	270	82	118	200	166	135	-8	10	8.1	8.1
HFm 50A	**HF 50A**												8.9	8.2
HFm 51B	**HF 51B**			45	303	92	133	225	190	160	2		12.9	12.7
HFm 51A	**HF 51A**												13.2	13.2
HFm 70C	**HF 70C**			48.5	373	114	155	269	216	171	12	12	20.0	20.0
HFm 70B	**HF 70B**												21.5	21.5
–	**HF 70A**				393								–	24.3
HFm 5B	**HF 5B**	**2"**	**2"**	43	316	97	141	238	192	160	-68	10	14.1	14.1
HFm 5A	**HF 5A**												15.1	14.1
HFm 5BM	**HF 5BM**			59	386	110	150	260	208		12.5	11	20.3	20.3
HFm 5AM	**HF 5AM**												21.8	21.8
HFm 5ARM	**HF 5ARM**				406								24.6	24.6

MATERIALS AND COMPONENTS

1	**Pump body**	Cast iron with ISO 228/1 threaded ports
2	**Cover**	Stainless steel **AISI 304** (cast iron for HF 5M-70)
3	**Impeller**	Stainless steel **AISI 304** (HF50 Start of production 06.2024) (HF51 Start of production 06.2024) (HF70 Start of production 04.2024) (HF5ARM Start of production 06.2024)

4 Mechanical seal

Water pump	Seal	Shaft	Materials
HF 50	**AR-12**	Ø 12 mm	Ceramic / Graphite / NBR
HF 5-51	**AR-14**	Ø 14 mm	Ceramic / Graphite / NBR
HF 5M-70	**FN-18**	Ø 18 mm	Graphite / Ceramic / NBR

5 Motor shaft — Stainless steel **AISI 431**

6 Electric motor

HFm: single-phase 230 V - 50 Hz with winding integrated thermal motor protection
HF: three-phase 230/400 V - 50 Hz

※ Pumps are equipped with high-efficiency motors (IEC 60034-30-1)
class **IE2** for single-phase models
class **IE3** for three-phase models

Continuous running duty **S1**

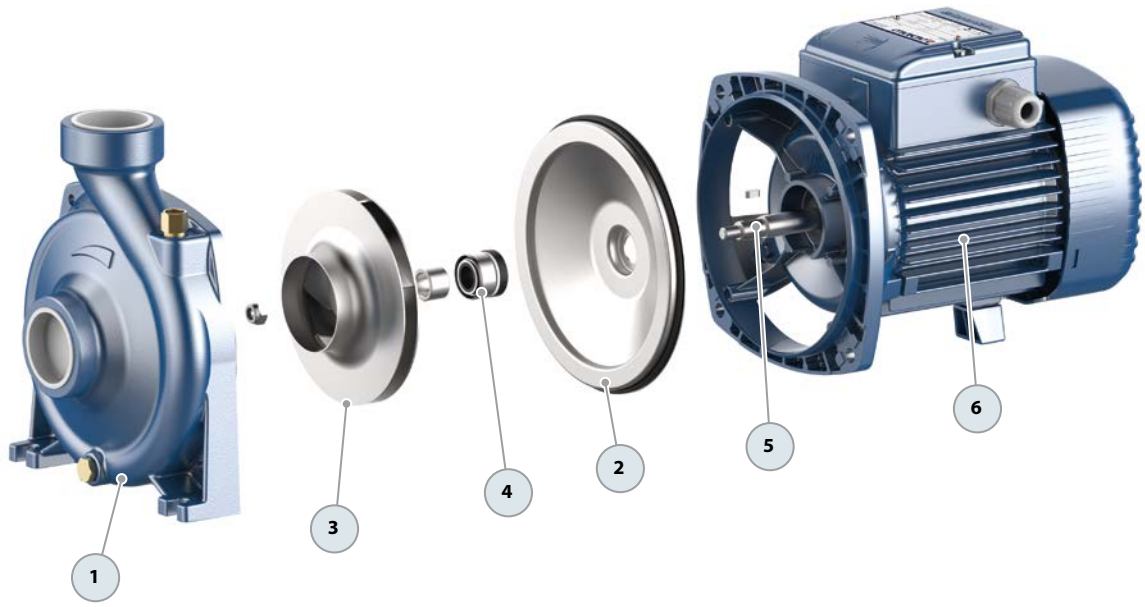

HF Centrifugal pumps

High flow rates

Clean water

Agricultural use

Industrial use

PERFORMANCE RANGE

- Flow rate up to **2400 l/min** (144 m³/h)
- Head up to **24.5 m**

INSTALLATION AND USE

Designed for civil and agricultural use.

Their high-efficiency levels and capability for continuous operation make them an ideal choice for furrow and sprinkler irrigation, in addition to drawing water from lakes, rivers, and wells. They are also suitable for a wide range of industrial applications that require substantial flow rates at medium-low head pressures.

ELECTRIC MOTOR

The three-phase pumps are equipped with newly developed electric motors designed to work with inverters, which guarantee stable and quiet operation.

Efficiency class **IE3** for three-phase motors and **IE2** for single-phase motors, with class F insulation and IPX4 protection.

APPLICATION LIMITS

- Manometric suction head up to **7 m**
- Liquid temperature between **-10 °C** and **+90 °C**
- Ambient temperature up to **+40 °C**
- Maximum working pressure:
  - **6 bar** for HF 4
  - **10 bar** for HF 6-8-20-30

AVAILABLE UPON REQUEST

※ Mechanical seal options available

※ Different voltage requirements 60 Hz frequency

CURVES AND PERFORMANCE DATA – HS=0 m

50 Hz

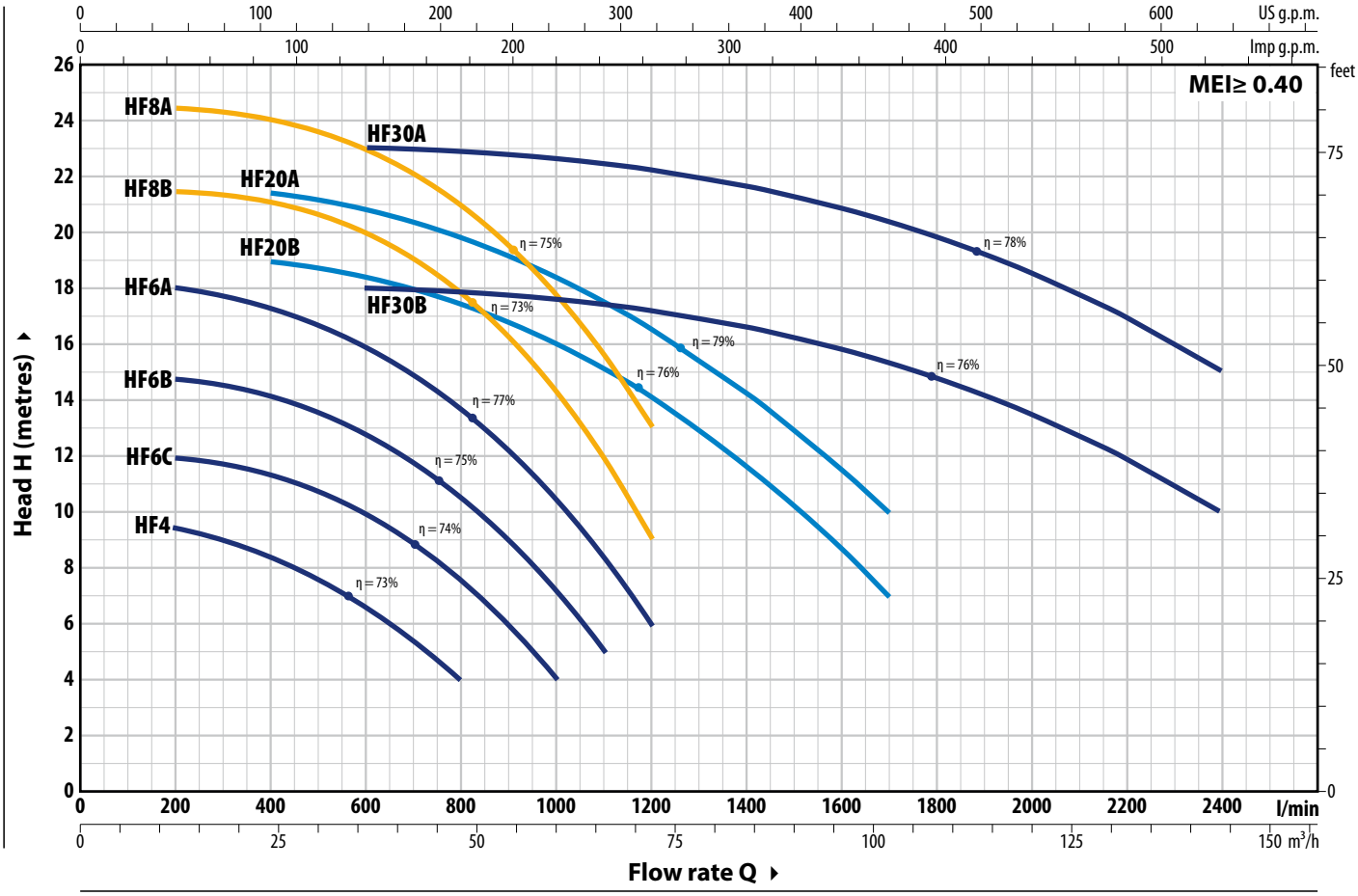

TYPE		POWER (P2)				Q m³/h	0	12	18	24	30	36	42	48	60	66	72	102	114	144
Single-ph.	**Three-ph.**	**kW**	**HP**	**1~**	**3~**	**Q l/min**	**0**	**200**	**300**	**400**	**500**	**600**	**700**	**800**	**1000**	**1100**	**1200**	**1700**	**1900**	**2400**
HFm 4	**HF 4**	0.75	1				9.8	9.5	9	8.5	7.6	6.6	5.4	4						
HFm 6C	**HF 6C**	1.1	1.5				12	12	11.8	11.4	10.8	10	9	7.6	4					
HFm 6B	**HF 6B**	1.5	2				14.8	14.8	14.6	14.2	13.6	12.8	11.8	10.5	7.2	5				
HFm 6A	**HF 6A**	2.2	3				18.5	18	17.8	17.4	16.8	16	15	13.7	10.4	8.4	6			
–	**HF 8B**	3	4	**IE2**	**IE3**	**H** metres	21.5	21.5	21.4	21	20.7	20	19	17.8	14.3	12	9			
–	**HF 8A**	4	5.5				24.5	24.5	24.4	24	23.6	23	22	21	17.7	15.6	13			
–	**HF 20B**	3	4				19	–	–	19	18.8	18.4	18	17.5	16	15.2	14.2	7		
–	**HF 20A**	4	5.5				21.5	–	–	21.5	21.3	21	20.5	20	18.5	17.6	16.6	10		
–	**HF 30B**	5.5	7.5				18	–	–	–	–	18	17.9	18	17.6	17.4	17.2	15.3	14.2	10
–	**HF 30A**	7.5	10				23	–	–	–	–	23	23	22.8	22.6	22.4	22.2	20.4	19.2	15

Q = Flow rate **H** = Total manometric head **HS** = Suction height

Performance curves comply with EN ISO 9906 Grade 3B tolerance limits.

ABSORPTION

TYPE	VOLTAGE
Single-ph.	**230 V**
HFm 4	5.9 A
HFm 6C	8.8 A
HFm 6B	10.4 A
HFm 6A	13.5 A

TYPE	VOLTAGE			
Three-ph.	**230 V - Δ**	**400 V - ⅄**	**400 V - Δ**	**690 V - ⅄**
HF 4	4.3 A	2.5 A	–	–
HF 6C	6.2 A	3.6 A	–	–
HF 6B	7.8 A	4.5 A	–	–
HF 6A	9.0 A	5.2 A	–	–
HF 8B	13.0 A	7.5 A	–	–
HF 8A	15.7 A	9.1 A	–	–
HF 20B	14.7 A	8.5 A	–	–
HF 20A	15.2 A	8.8 A	–	–
HF 30B	–	–	12.3 A	7.1 A
HF 30A	–	–	16.5 A	9.5 A

DIMENSIONS AND WEIGHT

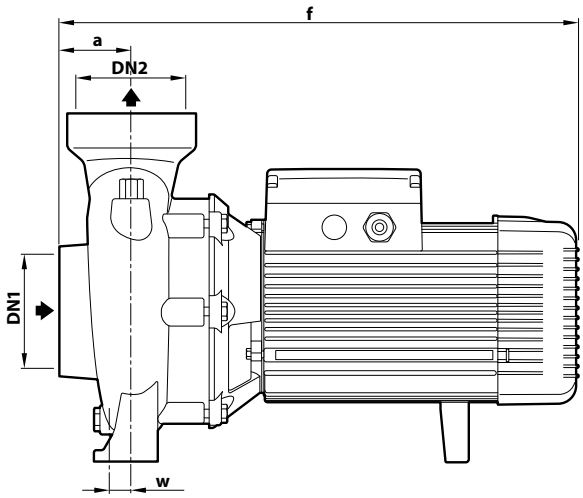

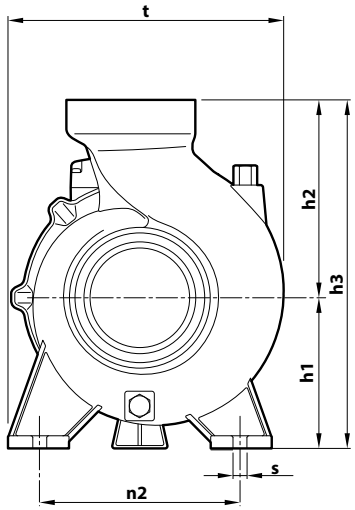

TYPE		PORTS		DIMENSIONS mm									kg	
Single-ph.	**Three-ph.**	**DN1**	**DN2**	a	f	h1	h2	h3	t	n2	w	s	1~	3~
HFm 4	**HF 4**	**2½"**	**2½"**	47	317	97	143	240	198	155	-63	10	14.5	14.5
HFm 6C	**HF 6C**	**3"**	**3"**	68	408	120	190	310	240	178	5	12	25.7	25.7
HFm 6B	**HF 6B**												26.8	26.8
HFm 6A	**HF 6A**				428								29.6	29.6
–	**HF 8B**	**4"**	**4"**	71	474	132	180	312	245	190	27	14	–	37.6
–	**HF 8A**												–	41.0
–	**HF 20B**				479				255				–	37.6
–	**HF 20A**												–	41.0
–	**HF 30B**			76.5	497	160	210	370	292	212	27	14	–	52.0
–	**HF 30A**				547								–	58.0

MATERIALS AND COMPONENTS

1	**Pump body**	Cast iron with ISO 228/1 threaded ports
2	**Cover**	Cast iron (**AISI 304** stainless steel for HF 4)
3	**Impeller**	Stainless Steel **AISI 304** for HF 4-6 Brass for HF 8 Cast iron for HF 20, HF 30

4 Mechanical seal

Water pump	Seal	Shaft	Materials
HF 4	**AR-14**	Ø 14 mm	Ceramic / Graphite / NBR
HF 6	**FN-18**	Ø 18 mm	Graphite / Ceramic / NBR
HF 8, HF 20	**FN-20**	Ø 20 mm	Graphite / Ceramic / NBR
HF 30	**FN-24**	Ø 24 mm	Graphite / Ceramic / NBR

5 Motor shaft — Stainless steel **AISI 431**

6 Electric motor

HFm: single-phase 230 V - 50 Hz with winding integrated thermal motor protection
HF: three-phase 230/400 V - 50 Hz up to 4 kW
400/690 V - 50 Hz from 5.5 to 7.5 kW.

※ Pumps are equipped with high-efficiency motors (IEC 60034-30-1)
class **IE2** for single-phase models
class **IE3** for three-phase models

Continuous running duty **S1**

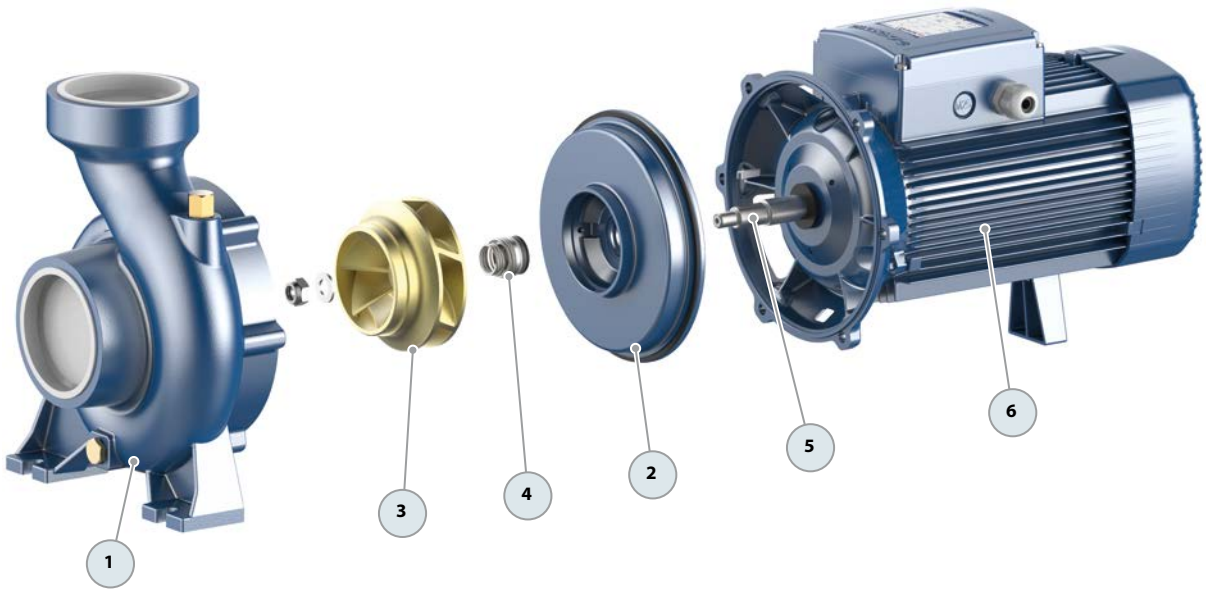

WR IN-LINE close-coupled centrifugal pumps

Clean water
Agricultural use
Civil use
Industrial use

FIELD PERFORMANCE

- Flow rate up to **700 l/min** (42 m³/h)
- Head up to **26 m**

INSTALLATION AND USE

WR centrifugal pumps are designed to transfer clean water free from abrasive particles and liquids that will not damage the pump's components.
Suitable for civil and industrial applications such as **heating, air conditioning, cooling, and circulation** systems.

ELECTRIC MOTOR

The three-phase pumps are equipped with newly developed electric motors designed to work with inverters, which guarantee stable and quiet operation.

Efficiency class **IE3** for three-phase motors and **IE2** for single-phase motors, with class F insulation and IPX4 protection.

INCLUDES

※ Pump's impeller directly mounted on the motor shaft.
※ Pump body with suction and discharge ports of identical diameter.

APPLICATION LIMITS

- Manometric suction head up to **7 m**
- Liquid temperature between **-10 °C** and **+110 °C**
- Ambient temperature between **-10 °C** and **+40 °C**
- Maximum pressure in the pump body **10 bar** (PN10)

AVAILABLE UPON REQUEST

※ Counterflange KIT including screws, nuts and gaskets
※ Mechanical seal options available
※ Different voltage requirements 60 Hz frequency

CURVES AND PERFORMANCE DATA – HS=0 m – n = 2900 min⁻¹

50 Hz

WR 40/125

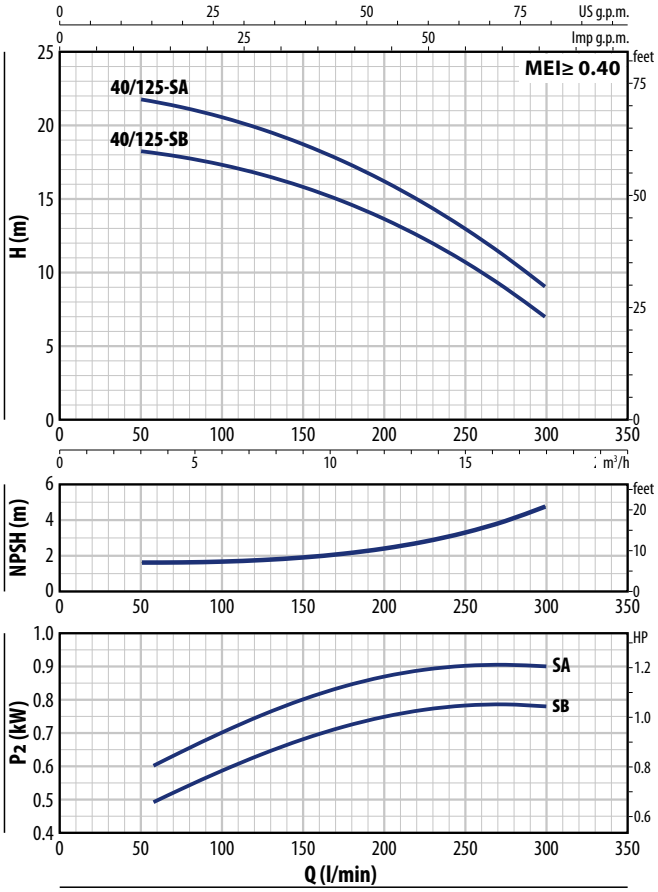

WR 50/125

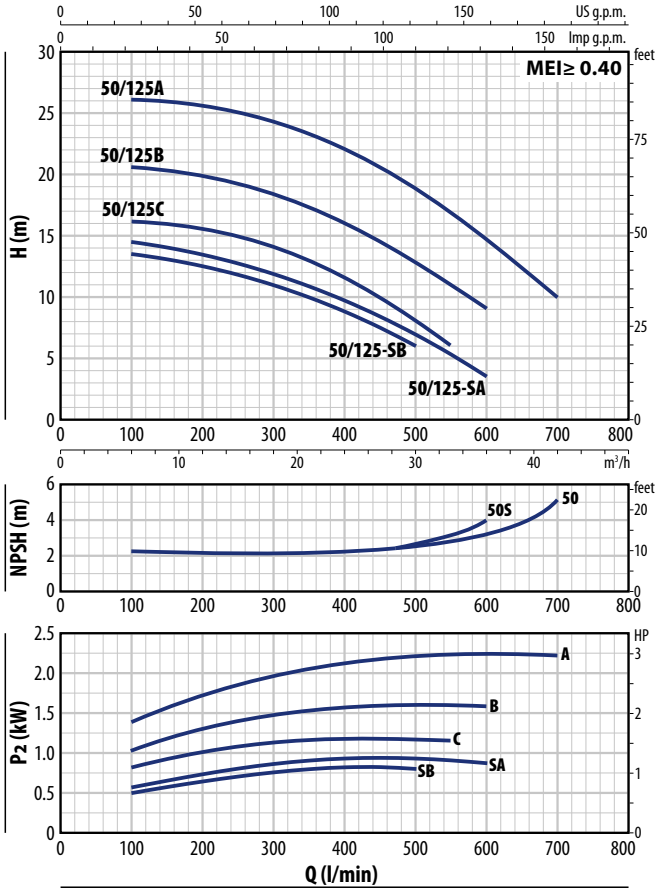

WR 40/125

TYPE		POWER (P2)				Q m³/h	0	3	6	9	12	15	18
Single-phase	Three-phase	kW	HP	1~	3~	Q l/min	0	50	100	150	200	250	300
WRm 40/125-SB	WR 40/125-SB	0.55	0.75	IE2	IE3	H metres	18.7	18.2	17.3	15.8	13.7	10.7	7
WRm 40/125-SA	WR 40/125-SA	0.75	1				22.4	21.8	20.6	18.7	16.2	13	9

WR 50/125

TYPE		POWER (P2)				Q m³/h	0	6	12	18	24	30	33	36	39	42
Single-phase	Three-phase	kW	HP	1~	3~	Q l/min	0	100	200	300	400	500	550	600	650	700
WRm 50/125-SB	WR 50/125-SB	0.55	0.75	IE2	IE3	H metres	14	13.5	12.5	11	8.8	6				
WRm 50/125-SA	WR 50/125-SA	0.75	1				15	14.5	13.5	11.8	9.7	7	5.5	3.5		
WRm 50/125C	WR 50/125C	1.1	1.5				16	16	15.5	14	11.5	8	6			
WRm 50/125B	WR 50/125B	1.5	2				20.5	20.5	19.8	18.5	16	12.8	11	9		
WRm 50/125A	WR 50/125A	2.2	3				26	26	25.5	24	22	18.5	17	14.5	12.5	10

Q = Flow rate **H** = Total manometric head **HS** = Suction height

Performance curves comply with EN ISO 9906 Grade 3B tolerance limits.

ABSORPTION

TYPE	VOLTAGE
Single-phase	**230 V**
WR 40/125-SB	5.2 A
WR 40/125-SA	6.0 A
WR 50/125-SB	5.2 A
WR 50/125-SA	6.0 A
WR 50/125C	8.0 A
WR 50/125B	10.0 A
WR 50/125A	13.5 A

TYPE	VOLTAGE	
Three-phase	**230 V - Δ**	**400 V - ⅄**
WR 40/125-SB	3.6 A	2.1 A
WR 40/125-SA	4.0 A	2.3 A
WR 50/125-SB	3.6 A	2.1 A
WR 50/125-SA	4.0 A	2.3 A
WR 50/125C	5.2 A	3.0 A
WR 50/125B	7.8 A	4.5 A
WR 50/125A	9.0 A	5.2 A

DIMENSIONS

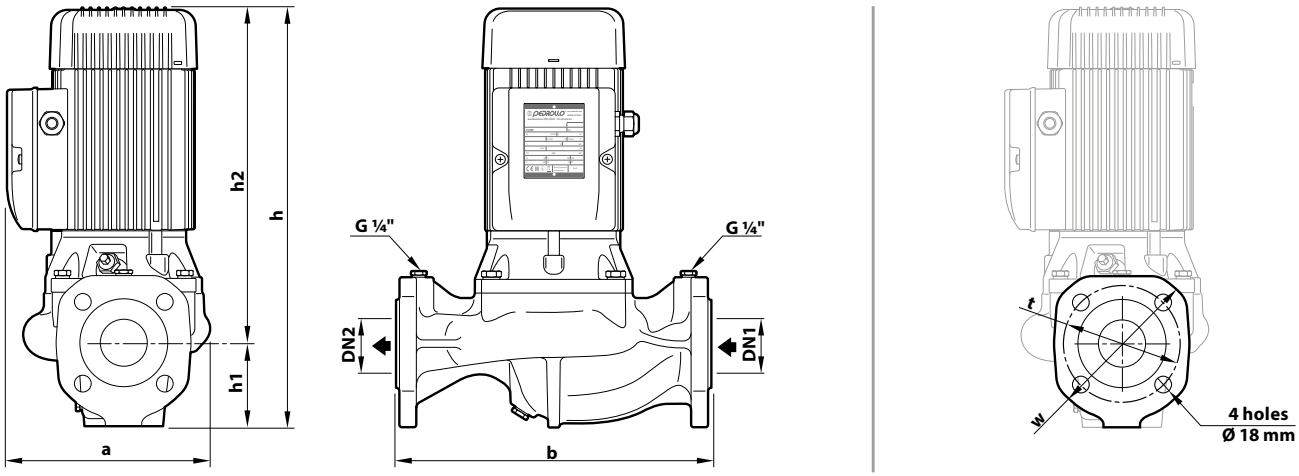

TYPE		PORTS		DIMENSIONS mm							kg
Single-phase	**Three-phase**	**DN1**	**DN2**	a	b	h	h1	h2	w	t	
WRm 40/125-SB	**WR 40/125-SB**	**DN 40**	**DN 40**	195	320	350	81	269	150	110	21.1
WRm 40/125-SA	**WR 40/125-SA**										
WRm 50/125-SB	**WR 50/125-SB**	**DN 50**	**DN 50**		340	362	90	272	165	125	23.4
WRm 50/125-SA	**WR 50/125-SA**										
WRm 50/125C	**WR 50/125C**			220	340	432	90	342	165	125	29.0
WRm 50/125B	**WR 50/125B**										30.0
WRm 50/125A	**WR 50/125A**					452		362			32.0

MATERIALS AND COMPONENTS

1	**Pump body**	Cast iron with cataphoresis treatment, provided with flanged ports
2	**Cover**	Cast iron with cataphoresis treatment
3	**Impeller**	Stainless steel **AISI 304**
4	**Shaft**	Stainless steel **AISI 431**

5 Mechanical seal

Water pump	Seal	Shaft	Materials
WR 40/125-S WR 50/125-S	**FNC-14**	Ø 14 mm	Graphite / Ceramic / EPDM
WR 50/125	**FN-20**	Ø 20 mm	Graphite / Ceramic / EPDM

6 Electric motor

WRm: single-phase 230 V - 50 Hz with capacitor and winding integrated thermal motor protection

WR: three-phase 230/400 V - 50 Hz

※ Pumps are equipped with high-efficiency motors (IEC 60034-30-1)
class **IE2** for single-phase models
class **IE3** for three-phase models

Continuous running duty **S1**

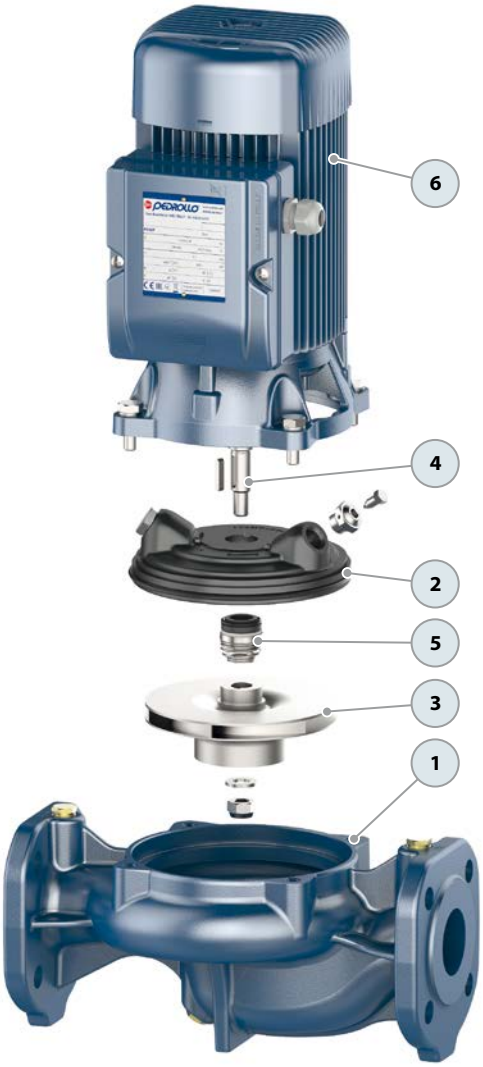

Centrifugal pumps standardized according to EN733

50 Hz

Clean water

Civil use

Industrial use

PERFORMANCE RANGE

- Flow rate up to **5750 l/min** (345 m³/h)
- Head up to **98 m**
- Power from **1.5** to **75 kW**

INSTALLATION AND USE

Close-coupled centrifugal electric pumps with flanges constructed according to the EN733 standard.

- For clean water free from abrasive particles and liquids that will not damage the pump's components
- Water supply
- Pressurization
- Irrigation
- Water circulation in air conditioning systems
- Power washing systems
- Firefighting systems
- Industrial applications
- Agriculture applications

Installation should be carried out in well-ventilated indoor or protected areas.

ELECTRIC MOTOR

The three-phase pumps are equipped with newly developed electric motors designed to work with inverters, which guarantee stable and quiet operation.

Efficiency class **IE3** for three-phacse motors, **IE2** for single-phase motors, class F insulation and IP55 protection.

APPLICATION LIMITS

- Manometric suction head up to **7 m**
- Liquid temperature between **-10 °C** and **+90 °C**
- Ambient temperature between **-10 °C** and **+40 °C**
- Maximum pressure in the pump body **10 bar** (PN10)

AVAILABLE UPON REQUEST

※ Mechanical seal options available
※ Different voltage requirements 60 Hz frequency
※ Handling of liquids with higher or lower temperatures
※ Adaptability to operate in high or low temperature environments
※ Counterflange KIT including screws, nuts and gasketsg

PERFORMANCE RANGE – n= 2900 min^{-1} 50 Hz

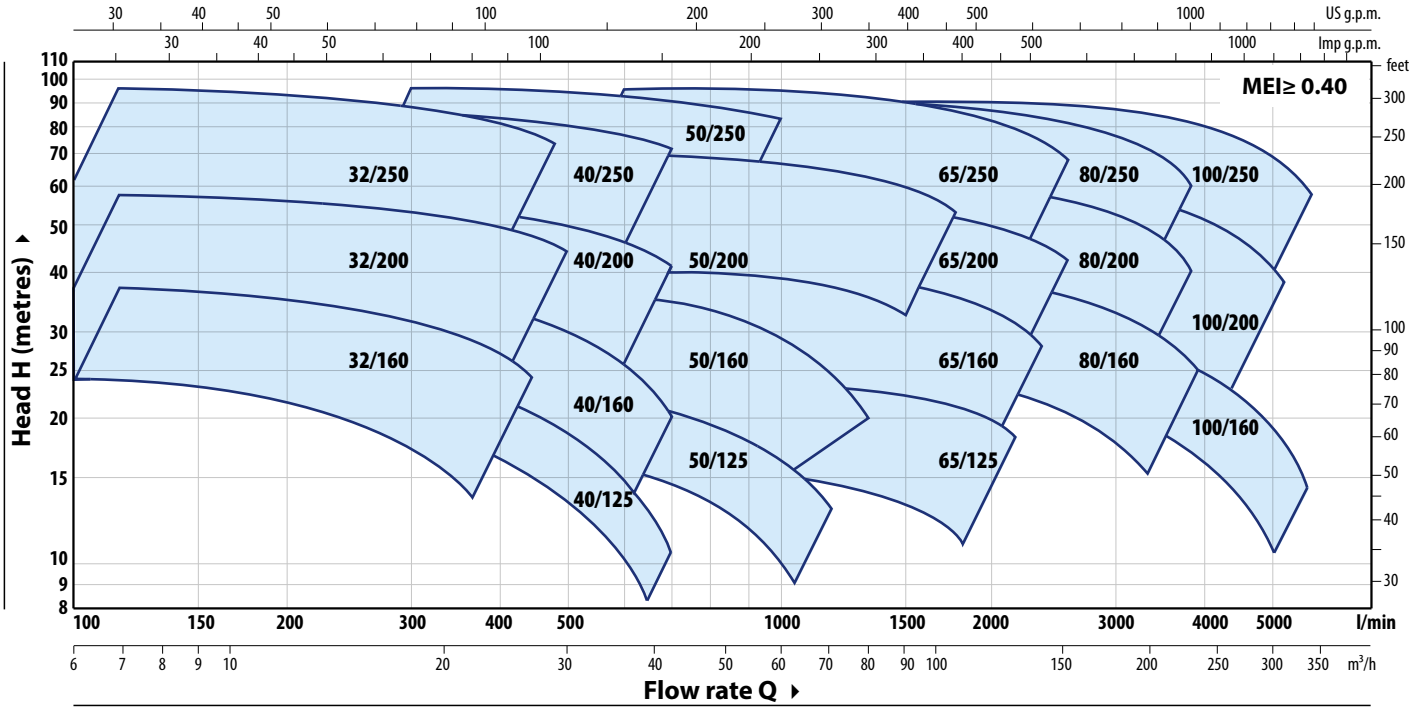

PERFORMANCE DATA – n= 2900 min^{-1} 50 Hz

TYPE	POWER (P2)		PERFORMANCE	
	kW	HP	Q l/min	H metres
F 32/160C	1.5	2	100 – 350	24 – 14
F 32/160B	2.2	3	100 – 400	30 – 17
F 32/160A	3	4	100 – 450	37 – 24
F 32/200C	4	5.5	100 – 450	44 – 31.5
F 32/200B	5.5	7.5	100 – 500	51 – 36
F 32/200A	7.5	10	100 – 500	57 – 44
F 32/200BH	3	4	100 – 300	45 – 37
F 32/200AH	4	5.5	100 – 320	55 – 44
F 32/250C	9.2	12.5	100 – 450	75 – 60
F 32/250B	11	15	100 – 500	87 – 70
F 32/250A	15	20	100 – 500	97 – 80
F 40/125C	1.1	1.5	100 – 550	16 – 6
F 40/125B	1.5	2	100 – 600	20.5 – 9
F 40/125A	2.2	3	100 – 700	26 – 10
F 40/160C	2.2	3	100 – 600	27 – 14
F 40/160B	3	4	100 – 600	32 – 20
F 40/160A	4	5.5	100 – 700	38 – 20
F 40/200B	5.5	7.5	100 – 700	47 – 28
F 40/200A	7.5	10	100 – 700	55 – 41
F 40/250C	9.2	12.5	100 – 700	64 – 47
F 40/250B	11	15	100 – 700	71 – 55
F 40/250A	15	20	100 – 700	88 – 72
F 50/125C	2.2	3	300 – 1200	17.5 – 6
F 50/125B	3	4	300 – 1200	20.7 – 9
F 50/125A	4	5.5	300 – 1200	23.5 – 13
F 50/160C	4	5.5	300 – 1000	27 – 16
F 50/160B	5.5	7.5	300 – 1200	32 – 18
F 50/160A	7.5	10	300 – 1350	37.5 – 20
F 50/200C	11	15	400 – 1700	44 – 30
F 50/200B	15	20	400 – 1700	52 – 38
F 50/200A	18.5	25	400 – 1800	61 – 45
F 50/200AR	22	30	400 – 1800	69 – 53

TYPE	POWER (P2)		PERFORMANCE	
	kW	HP	Q l/min	H metres
F 50/250D	9.2	12.5	300 – 900	51 – 32
F 50/250C	11	15	300 – 1000	59 – 43
F 50/250B	15	20	300 – 1000	72 – 59
F 50/250A	18.5	25	300 – 1000	85 – 73
F 50/250AR	22	30	300 – 1000	95 – 83
F 65/125C	4	5.5	600 – 1800	16 – 11
F 65/125B	5.5	7.5	600 – 2000	18 – 13
F 65/125A	7.5	10	600 – 2200	23 – 18
F 65/160C	9.2	12.5	600 – 2200	32 – 22
F 65/160B	11	15	600 – 2400	36.5 – 23
F 65/160A	15	20	600 – 2400	40.5 – 28
F 65/200B	15	20	200 – 2400	44 – 30.5
F 65/200A	18.5	25	200 – 2500	50 – 36.5
F 65/200AR	22	30	200 – 2600	57 – 42
F 65/250C	30	40	400 – 2350	76 – 53
F 65/250B	37	50	400 – 2500	87 – 62
F 65/250A	45	60	400 – 2600	95 – 68
F 80/160D	11	15	500 – 4000	25 – 10
F 80/160C	15	20	500 – 4000	30 – 15
F 80/160B	18.5	25	500 – 4000	35 – 20
F 80/160A	22	30	500 – 4000	40 – 25
F 80/200B	30	40	500 – 3650	56 – 34.5
F 80/200A	37	50	500 – 3900	62 – 40
F 80/250B	45	60	600 – 3600	77 – 54
F 80/250A	55	75	600 – 3900	88.5 – 60
F 100/160C	15	20	1000 – 5000	30 – 12
F 100/160B	18.5	25	1000 – 5200	34 – 14.5
F 100/160A	22	30	1000 – 5500	38 – 17.5
F 100/200C	30	40	833 – 4650	51 – 28
F 100/200B	37	50	833 – 4900	57 – 33
F 100/200A	45	60	833 – 5250	63 – 38
F 100/250B	55	75	800 – 5150	75 – 48
F 100/250A	75	100	800 – 5750	89 – 58

F 32

CURVES AND PERFORMANCE DATA – HS=0 m

50 Hz

F 32/160

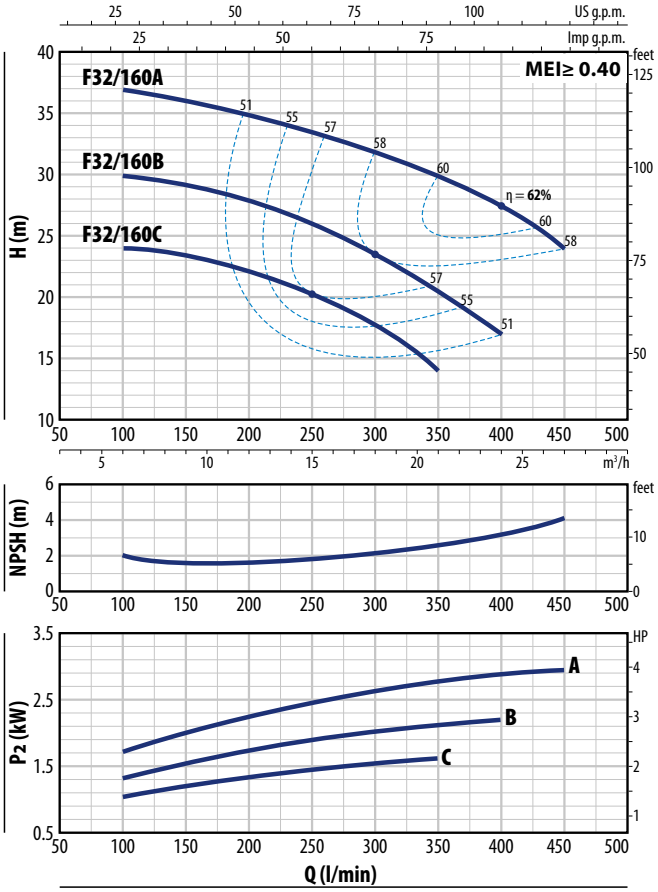

F 32/200

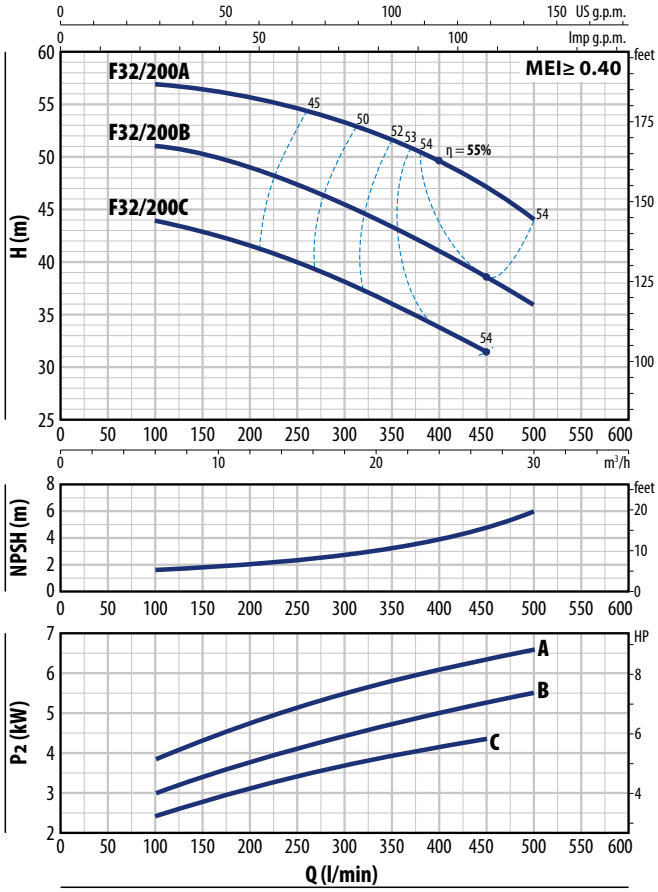

F 32/160

TYPE		POWER (P2)				Q m³/h	0	6	9	12	15	18	21	24	27
Single-ph.	**Three-ph.**	**kW**	**HP**	**1~**	**3~**	l/min	**0**	**100**	**150**	**200**	**250**	**300**	**350**	**400**	**450**
Fm 32/160C	**F 32/160C**	1.5	2				25	24	23.5	22	20.5	18	14		
Fm 32/160B	**F 32/160B**	2.2	3	**IE2**	**IE3**	**H** metres	31	30	29	28	26	23.5	20.5	17	
–	**F 32/160A**	3	4				38	37	36	35	33.5	31.5	30	27.5	24

F 32/200

TYPE	POWER (P2)			Q m³/h	0	6	9	12	15	18	21	24	27	30
Three-ph.	**kW**	**HP**	**3~**	l/min	**0**	**100**	**150**	**200**	**250**	**300**	**350**	**400**	**450**	**500**
F 32/200C	4	5.5			46	44	43	41.5	40	38	36	34	31.5	
F 32/200B	5.5	7.5	**IE3**	**H** metres	52	51	50.5	49	47	45	43	41	38.5	36
F 32/200A	7.5	10			60	57	56.5	56	55	53.5	52	50	47	44

Q = Flow rate **H** = Total manometric head **HS** = Suction height

Performance curves comply with EN ISO 9906 Grade 3B tolerance limits.

CURVES AND PERFORMANCE DATA – HS=0 m

50 Hz

F 32/200H

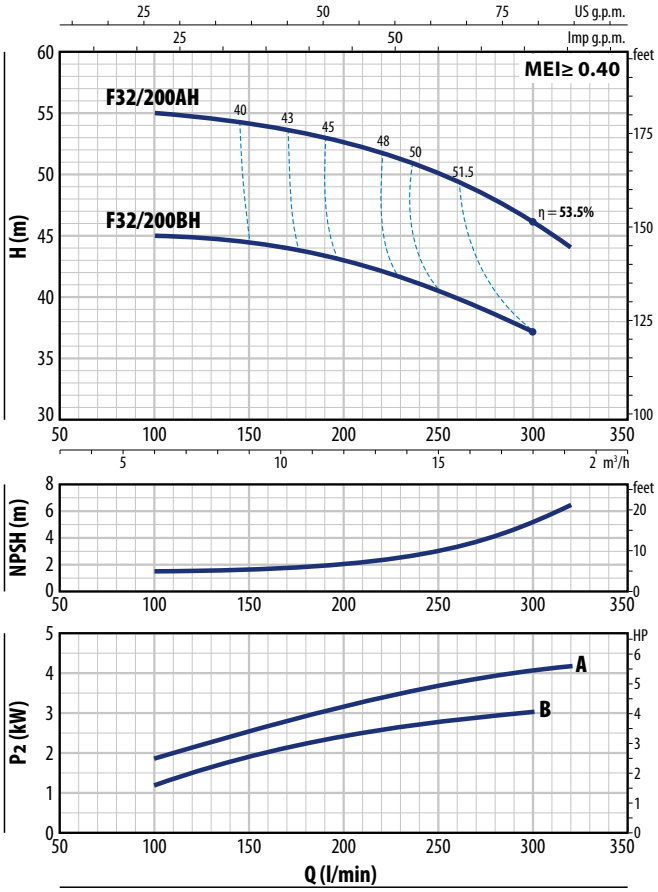

F 32/250

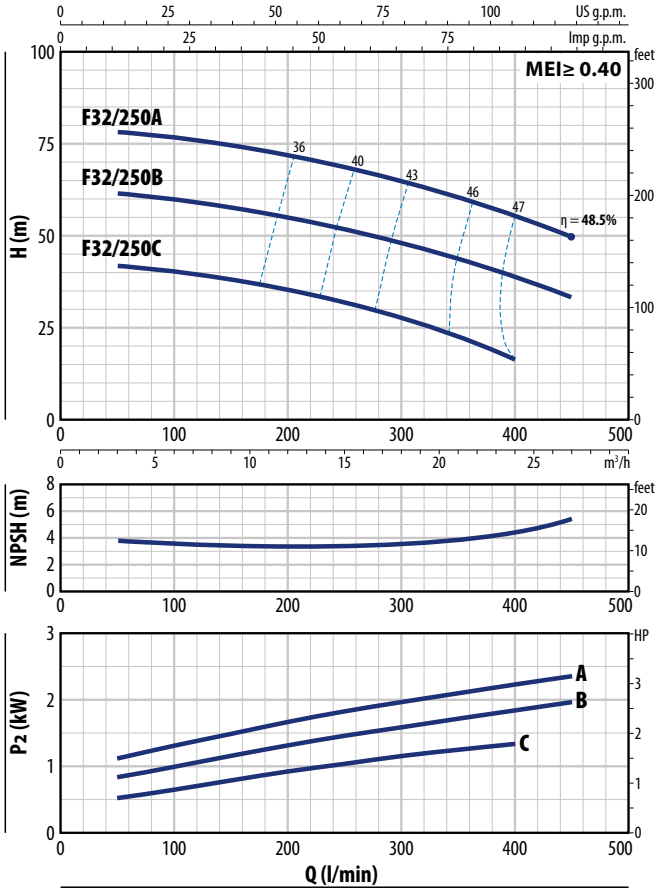

F 32/200H

TYPE	POWER (P2)			Q	m³/h	0	6	9	12	15	18	19.2
Three-phase	**kW**	**HP**	**3~**		l/min	**0**	**100**	**150**	**200**	**250**	**300**	**320**
F 32/200BH	3	4	**IE3**	**H** metres		47	45	44.5	43	40.5	37	
F 32/200AH	4	5.5				57	55	54	52.5	50	46	44

F 32/250

TYPE	POWER (P2)			Q	m³/h	0	6	9	12	15	18	21	24	27	30
Three-phase	**kW**	**HP**	**3~**		l/min	**0**	**100**	**150**	**200**	**250**	**300**	**350**	**400**	**450**	**500**
F 32/250C	9.2	12.5	**IE3**	**H** metres		76	75	74.5	73	71.5	69.5	67	64	60	
F 32/250B	11	15				88	87	86	85	83	81	79	76.5	73.5	70
F 32/250A	15	20				98	97	96	95	93	91	89	86.5	83.5	80

Q = Flow rate **H** = Total manometric head **HS** = Suction height

Performance curves comply with EN ISO 9906 Grade 3B tolerance limits.

F 40

CURVES AND PERFORMANCE DATA – HS=0 m

50 Hz

F 40/125

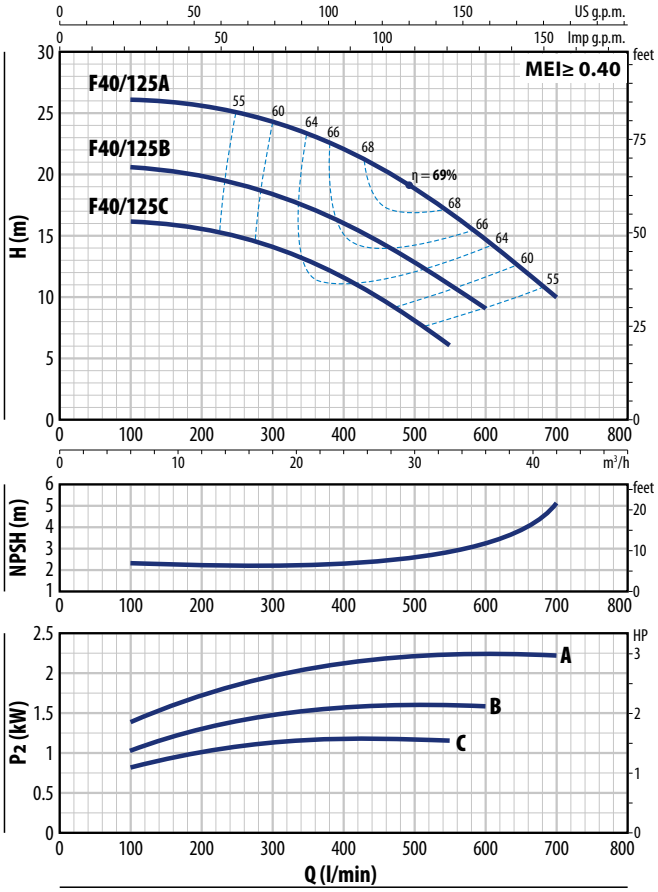

F 40/160

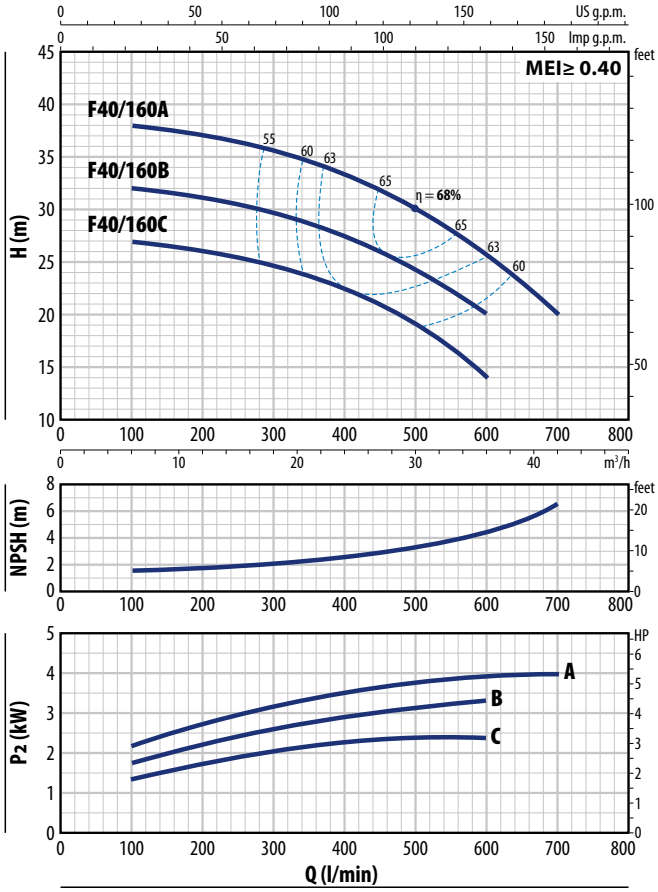

F 40/125

TYPE		POWER (P2)				Q m³/h	0	6	12	18	24	30	33	36	39	42
Single-phase	**Three-phase**	**kW**	**HP**	**1~**	**3~**	l/min	**0**	**100**	**200**	**300**	**400**	**500**	**550**	**600**	**650**	**700**
Fm 40/125C	**F 40/125C**	1.1	1.5				16	16	15.5	14	11.5	8	6			
Fm 40/125B	**F 40/125B**	1.5	2	**IE2**	**IE3**	**H** metres	20.5	20.5	19.8	18.5	16	12.8	11	9		
–	**F 40/125A**	2.2	3				26	26	25.5	24	22	18.5	17	14.5	12.5	10

F 40/160

TYPE		POWER (P2)				Q m³/h	0	6	9	12	15	18	24	30	36	42
Single-phase	**Three-phase**	**kW**	**HP**	**1~**	**3~**	l/min	**0**	**100**	**150**	**200**	**250**	**300**	**400**	**500**	**600**	**700**
Fm 40/160C	**F 40/160C**	2.2	3				27	27	26.5	26	25.5	25	22.5	19	14	
–	**F 40/160B**	3	4	**IE2**	**IE3**	**H** metres	32	32	31.5	31	30.5	30	27.5	24	20	
–	**F 40/160A**	4	5.5				38	38	37.8	37	36.5	36	33.5	30	26	20

Q = Flow rate **H** = Total manometric head **HS** = Suction height

Performance curves comply with EN ISO 9906 Grade 3B tolerance limits.

CURVES AND PERFORMANCE DATA – HS=0 m

50 Hz

F 40/200

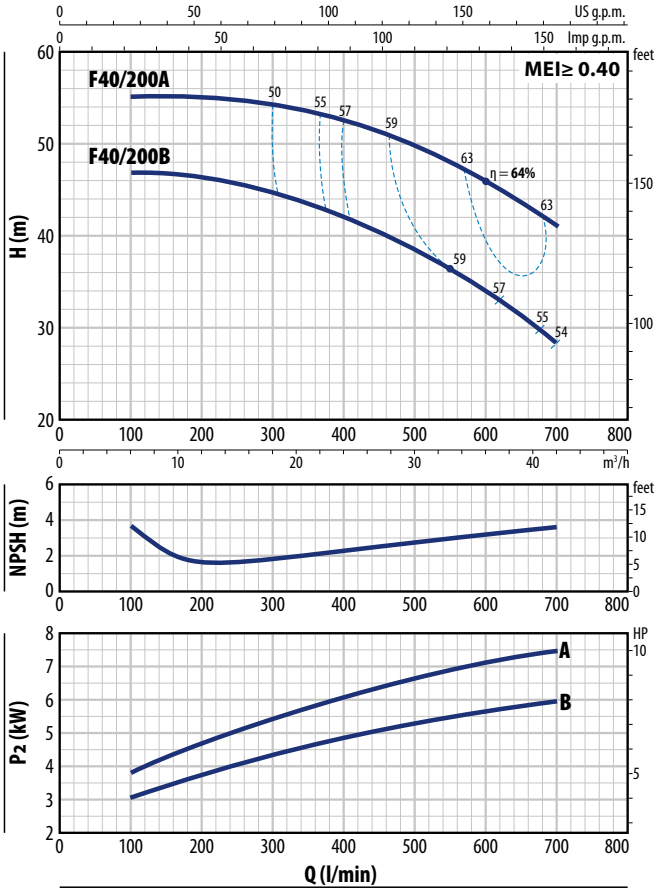

F 40/250

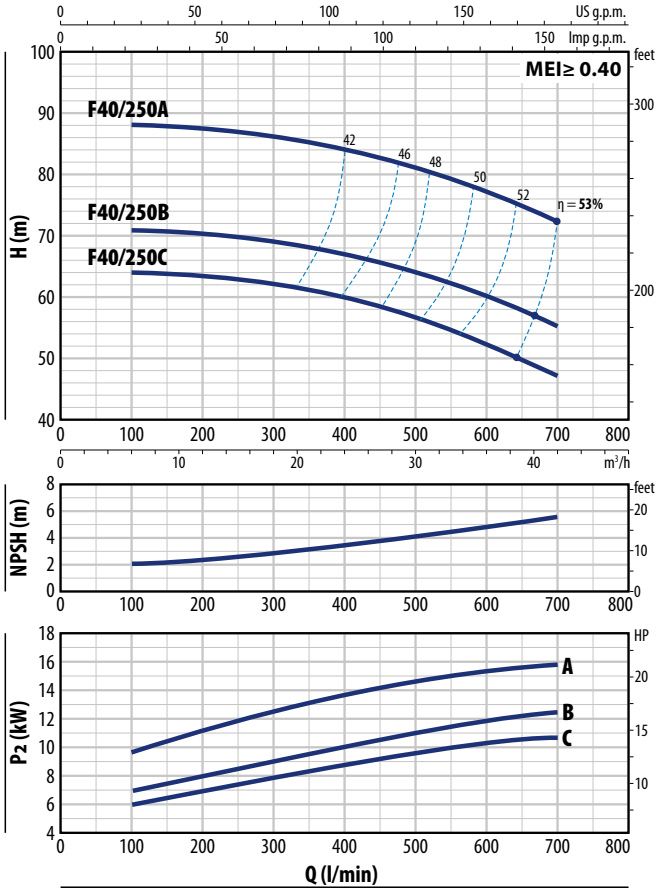

F 40/200

TYPE	POWER (P2)			Q m³/h	0	6	9	12	15	18	24	30	36	42
Three-phase	kW	HP	3~	Q l/min	**0**	**100**	**150**	**200**	**250**	**300**	**400**	**500**	**600**	**700**
F 40/200B	5.5	7.5	IE3	H metres	48	47	46.5	46	45.5	44.5	42	38	34	28
F 40/200A	7.5	10			56	55	55	55	54.5	54	52.5	49.5	46	41

F 40/250

TYPE	POWER (P2)			Q m³/h	0	6	9	12	15	18	24	30	36	42
Three-phase	kW	HP	3~	Q l/min	**0**	**100**	**150**	**200**	**250**	**300**	**400**	**500**	**600**	**700**
F 40/250C	9.2	12.5	IE3	H metres	64	64	63.5	63	62.5	62	60	56.5	52.5	47
F 40/250B	11	15			71	71	70.5	70	69.5	69	67	64	60	55
F 40/250A	15	20			88	88	87.5	87	86.5	86	84	81	77	72

Q = Flow rate **H** = Total manometric head **HS** = Suction height

Performance curves comply with EN ISO 9906 Grade 3B tolerance limits.

F 50

CURVES AND PERFORMANCE DATA – HS=0 m

50 Hz

F 50/125

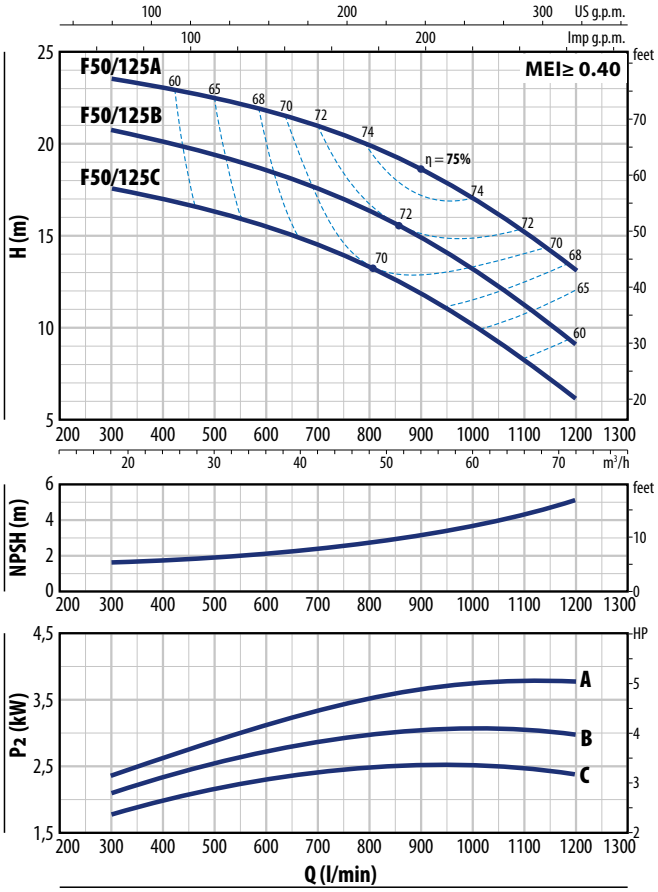

F 50/160

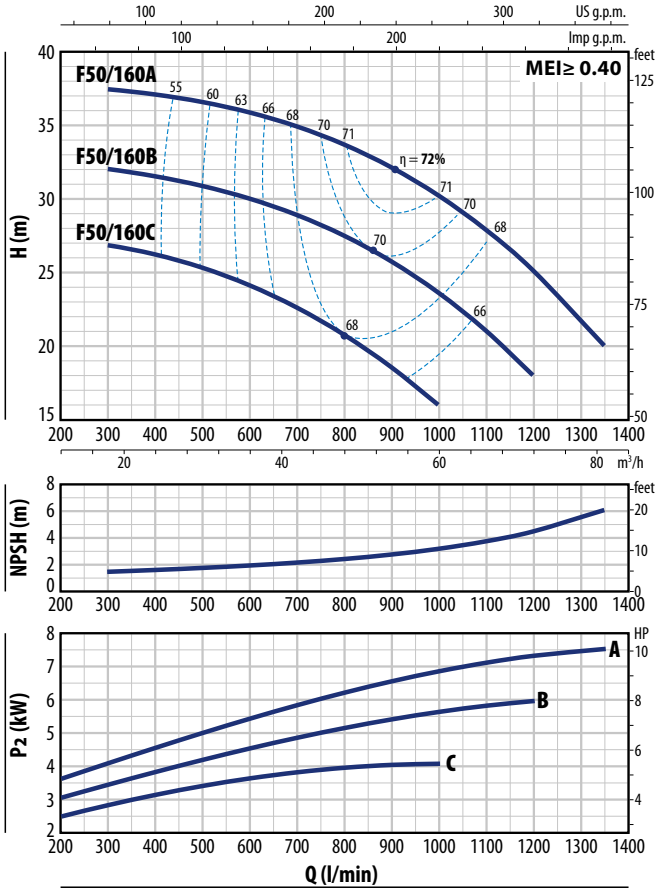

F 50/125

TYPE		POWER (P2)				Q m³/h	0	18	24	30	36	42	48	54	60	66	72
Single-ph.	**Three-ph.**	**kW**	**HP**	**1~**	**3~**	l/min	**0**	**300**	**400**	**500**	**600**	**700**	**800**	**900**	**1000**	**1100**	**1200**
Fm 50/125C	**F 50/125C**	2.2	3				18.5	17.5	17	16.5	15.5	14.8	13.5	12	10.5	8.2	6
–	**F 50/125B**	3	4	**IE2**	**IE3**	**H** metres	21.5	20.7	20	19.5	18.8	17.8	16.5	15	13.5	11.2	9
–	**F 50/125A**	4	5.5				24.5	23.5	23	22.5	21.8	20.8	19.5	18.3	16.8	15	13

F 50/160

TYPE	POWER (P2)			Q m³/h	0	18	24	30	36	42	48	54	60	66	72	81
Three-phase	**kW**	**HP**	**3~**	l/min	0	**300**	**400**	**500**	**600**	**700**	**800**	**900**	**1000**	**1100**	**1200**	**1350**
F 50/160C	4	5.5			27	27	26.5	25	24.5	23	20	18.5	16			
F 50/160B	5.5	7.5	**IE3**	**H** metres	33	32	31.7	31	30	29	27.4	25.7	23.5	21	18	
F 50/160A	7.5	10			38	37.5	37	36.5	36	35	33.7	32	30.2	28	25	20

Q = Flow rate **H** = Total manometric head **HS** = Suction height

Performance curves comply with EN ISO 9906 Grade 3B tolerance limits.

CURVES AND PERFORMANCE DATA – HS=0 m

50 Hz

F 50/200

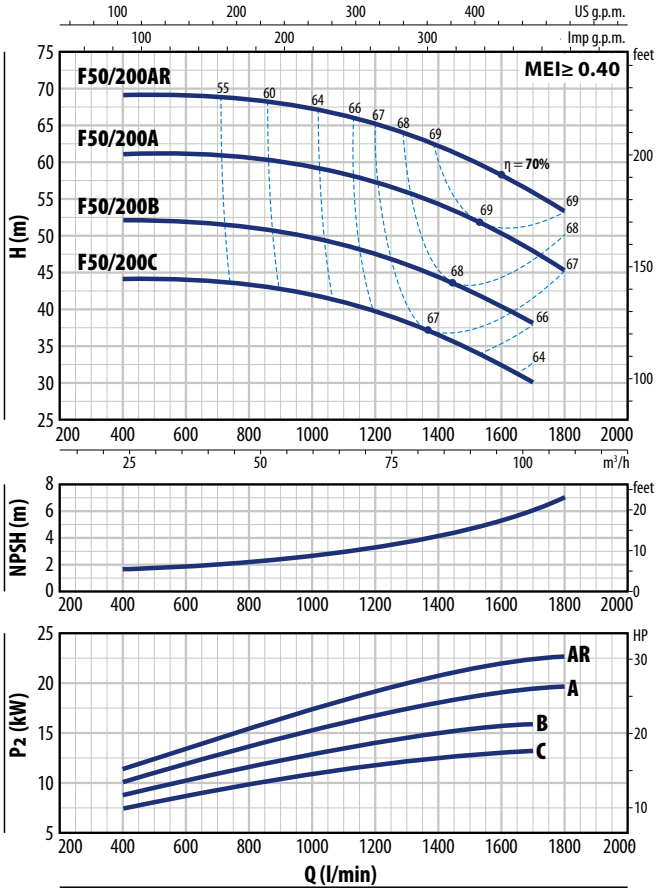

F 50/250

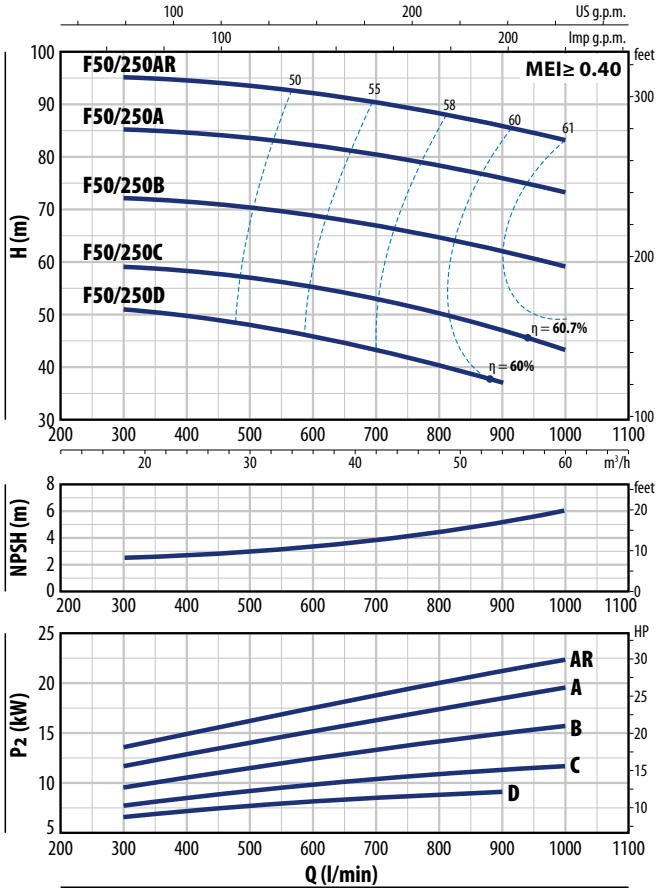

F 50/200

TYPE	POWER (P2)			Q m³/h	24	36	48	60	72	84	96	102	108
Three-phase	kW	HP	3~	Q l/min	**400**	**600**	**800**	**1000**	**1200**	**1400**	**1600**	**1700**	**1800**
F 50/200C	11	15	IE3	H metres	44	44	44	42	39	36	33	30	
F 50/200B	15	20			52	52	52	50	47	44	40	38	
F 50/200A	18.5	25			61	61	60.5	60	57	54	50	48	45
F 50/200AR	22	30			69	69	68.5	68	65	62	58	56	53

F 50/250

TYPE	POWER (P2)			Q m³/h	0	18	24	30	36	42	48	54	60
Three-phase	kW	HP	3~	Q l/min	**0**	**300**	**400**	**500**	**600**	**700**	**800**	**900**	**1000**
F 50/250D	9.2	12.5	IE3	H metres	51	50.5	49.5	48	45.5	43	40	37	
F 50/250C	11	15			59	59	58	56.5	55	53	50	47	43
F 50/250B	15	20			72	72	71	70	69	67	65	62	59
F 50/250A	18.5	25			85	85	84	83	82	80	78	76	73
F 50/250AR	22	30			95	95	94	93	92	90	88	86	83

Q = Flow rate **H** = Total manometric head **HS** = Suction height

Performance curves comply with EN ISO 9906 Grade 3B tolerance limits.

F 65

CURVES AND PERFORMANCE DATA – HS=0 m

50 Hz

F 65/125

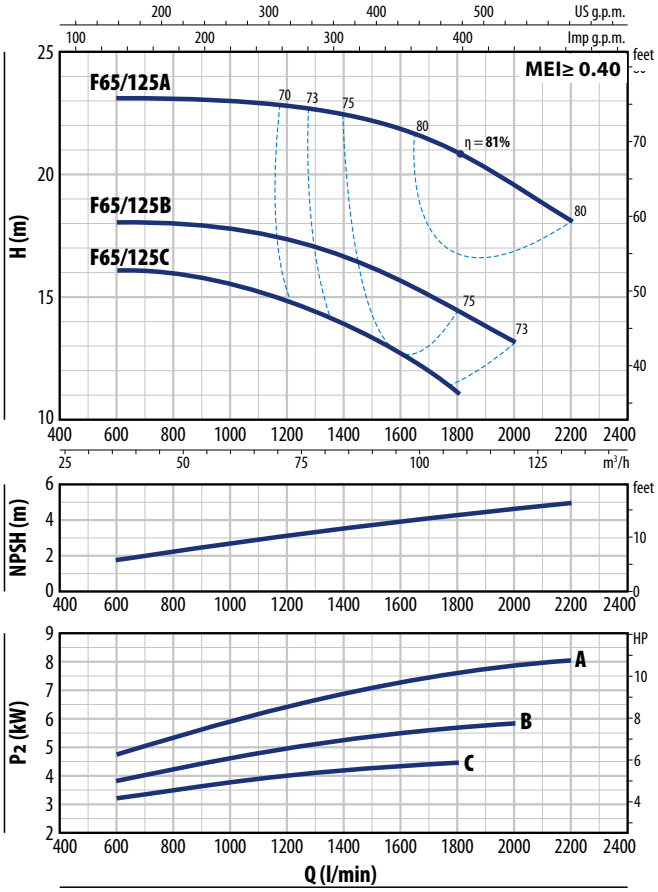

F 65/160

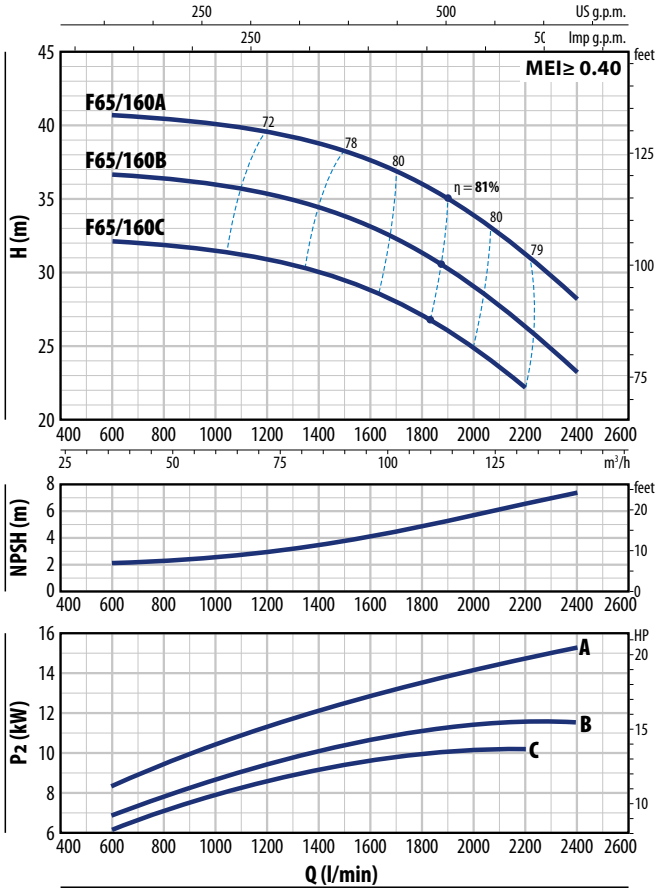

F 65/125

TYPE	POWER (P2)			Q m³/h	0	36	48	60	72	84	96	108	120	132
Three-phase	kW	HP	3~	l/min	**0**	**600**	**800**	**1000**	**1200**	**1400**	**1600**	**1800**	**2000**	**2200**
F 65/125C	4	5.5			16	16	16	15.5	14.5	13.5	12.5	11		
F 65/125B	5.5	7.5	IE3	**H** metres	18	18	18	18	17	16.5	15.5	14.5	13	
F 65/125A	7.5	10			23	23	23	23	22.5	22.5	22	21	19.5	18

F 65/160

TYPE	POWER (P2)			Q m³/h	0	36	48	60	72	84	96	108	120	132	144
Three-phase	kW	HP	3~	l/min	**0**	**600**	**800**	**1000**	**1200**	**1400**	**1600**	**1800**	**2000**	**2200**	**2400**
F 65/160C	9.2	12.5			32	32	32	32	32	30	29	27	25	22	
F 65/160B	11	15	IE3	**H** metres	37	36.5	36.5	36	35.5	34	33	31	29	26	23
F 65/160A	15	20			41	40.5	40.5	40	39.5	39	37.5	36	34	31	28

Q = Flow rate **H** = Total manometric head **HS** = Suction height

Performance curves comply with EN ISO 9906 Grade 3B tolerance limits.

CURVES AND PERFORMANCE DATA – HS=0 m

50 Hz

F 65/200

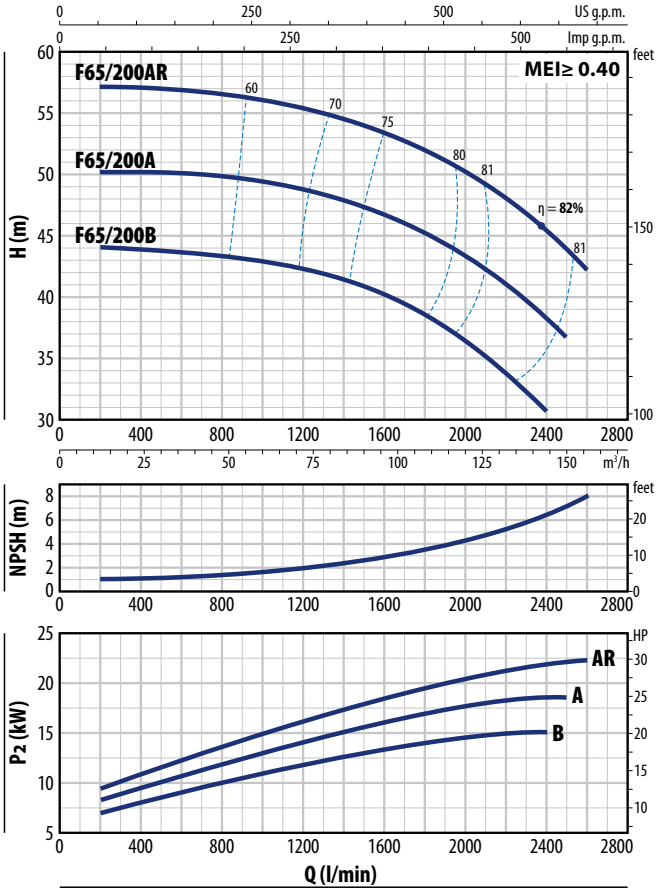

F 65/250

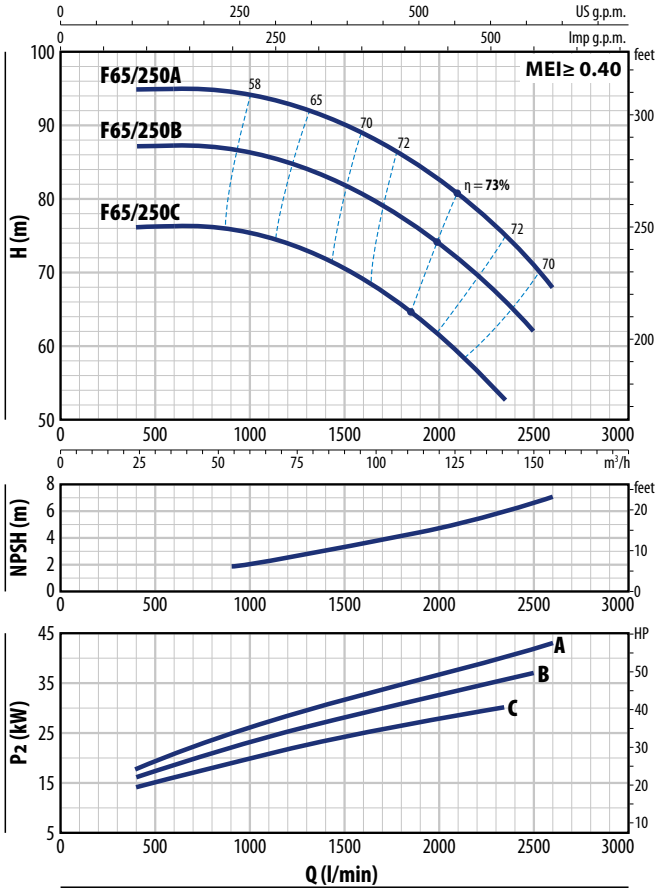

F 65/200

TYPE	POWER (P2)			Q m³/h	12	36	48	60	72	84	96	108	120	132	144	150	156
Three-phase	kW	HP	3~	Q l/min	**200**	**600**	**800**	**1000**	**1200**	**1400**	**1600**	**1800**	**2000**	**2200**	**2400**	**2500**	**2600**
F 65/200B	15	20			44	43.5	43.3	43	42.5	41.5	40	38.5	36.5	34	30.5		
F 65/200A	18.5	25	**IE3**	**H** metres	50	50	50	49.5	49	48	46.5	45	43	41	38	36.5	
F 65/200AR	22	30			57	57	57	56	55.5	54.5	53.5	52	50	48	45.5	43.5	42

F 65/250

TYPE	POWER (P2)			Q m³/h	24	40	60	80	100	120	141	150	156
Three-phase	kW	HP	3~	Q l/min	**400**	**667**	**1000**	**1333**	**1667**	**2000**	**2350**	**2500**	**2600**
F 65/250C	30	40			76	76	75.5	72.5	68	61.5	53		
F 65/250B	37	50	**IE3**	**H** metres	87	87	86	84	80	74	66.5	62	
F 65/250A	45	60			95	95	94	92	88	82.5	75	71	68

Q = Flow rate **H** = Total manometric head **HS** = Suction height

Performance curves comply with EN ISO 9906 Grade 3B tolerance limits.

F 80

CURVES AND PERFORMANCE DATA – HS=0 m

50 Hz

F 80/160

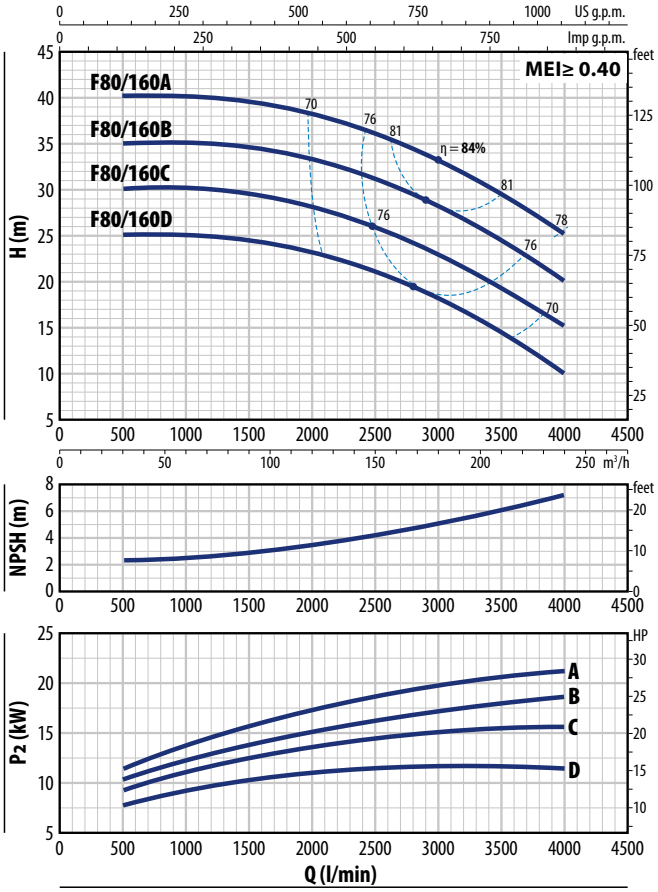

F 80/200

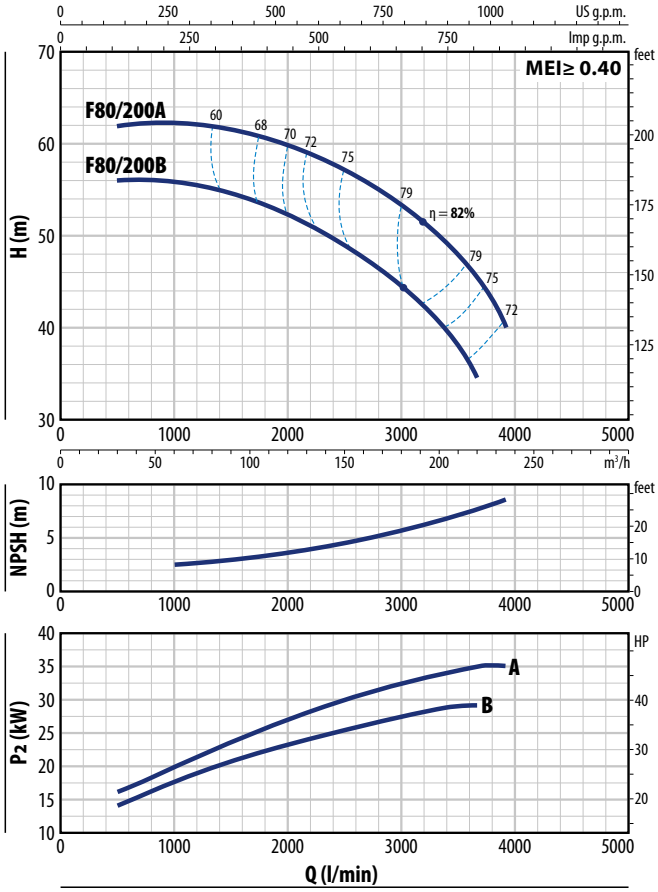

F 80/160

TYPE	POWER (P2)			Q m³/h	0	30	60	90	120	150	180	210	240
Three-phase	kW	HP	3~	l/min	**0**	**500**	**1000**	**1500**	**2000**	**2500**	**3000**	**3500**	**4000**
F 80/160D	11	15	IE3	H metres	25	25	25	24.5	23.5	21	18	14.5	10
F 80/160C	15	20			30	30	30	29.5	28.5	26	23	19.5	15
F 80/160B	18.5	25			35	35	35	34.5	33.5	31	28.5	24.5	20
F 80/160A	22	30			40	40	40	39.5	38.5	36	33	29.5	25

F 80/200

TYPE	POWER (P2)			Q m³/h	30	50	100	150	200	219	234
Three-phase	kW	HP	3~	l/min	**500**	**833**	**1667**	**2500**	**3333**	**3650**	**3900**
F 80/200B	30	40	IE3	H metres	56	56	54	49	41	34.5	
F 80/200A	37	50			62	62	61	57	50	45.5	40

Q = Flow rate **H** = Total manometric head **HS** = Suction height

Performance curves comply with EN ISO 9906 Grade 3B tolerance limits.

CURVES AND PERFORMANCE DATA – HS=0 m

50 Hz

F 80/250

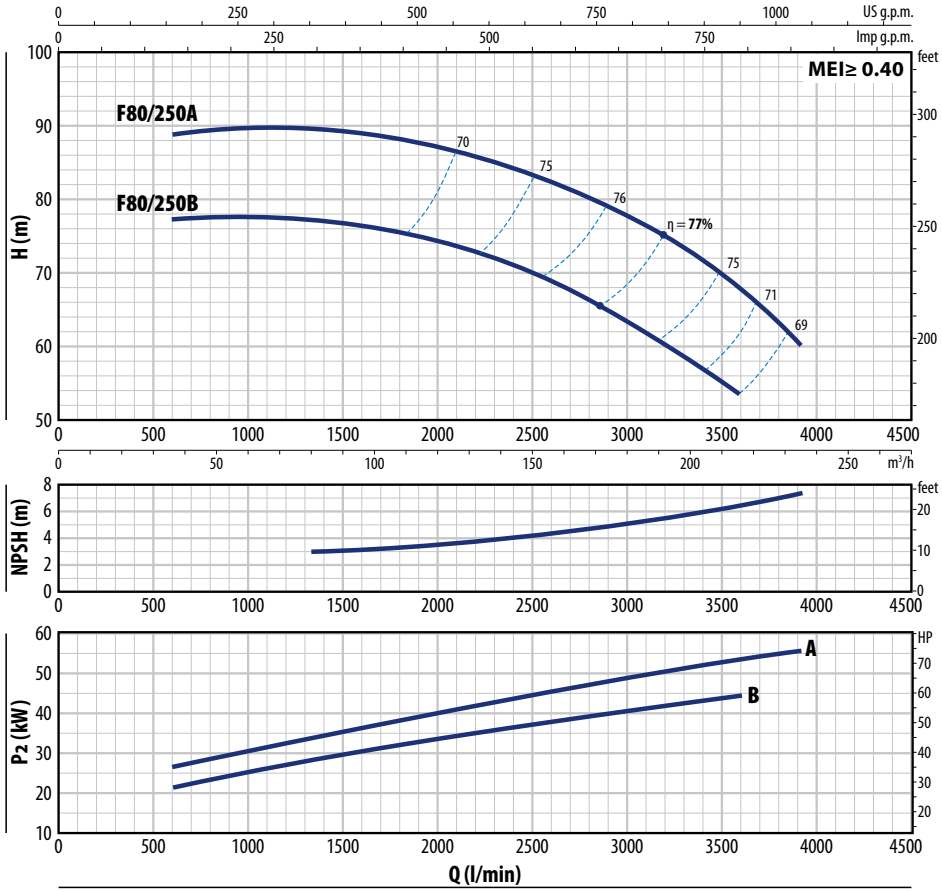

F 80/250

TYPE	POWER (P2)			Q	m³/h	36	50	100	150	200	216	234
Three-phase	kW	HP	3~		l/min	**600**	**833**	**1667**	**2500**	**3333**	**3600**	**3900**
F 80/250B	45	60	IE3	H metres		77	77.5	76	70.5	58.5	54	
F 80/250A	55	75				88.5	89.5	89	83	72	68	60

Q = Flow rate **H** = Total manometric head **HS** = Suction height

Performance curves comply with EN ISO 9906 Grade 3B tolerance limits.

F 100

CURVES AND PERFORMANCE DATA – HS=0 m

50 Hz

F 100/160

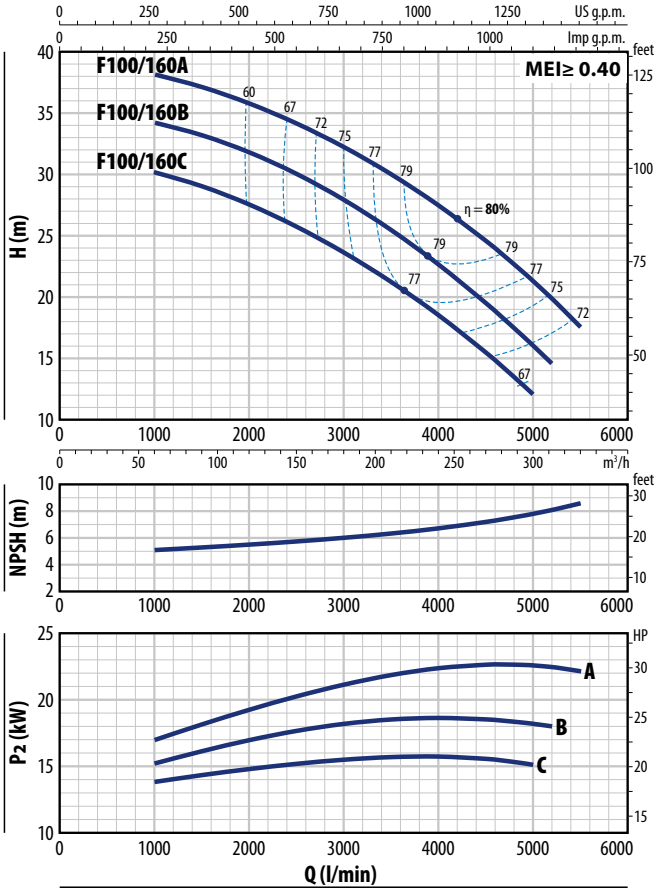

F 100/200

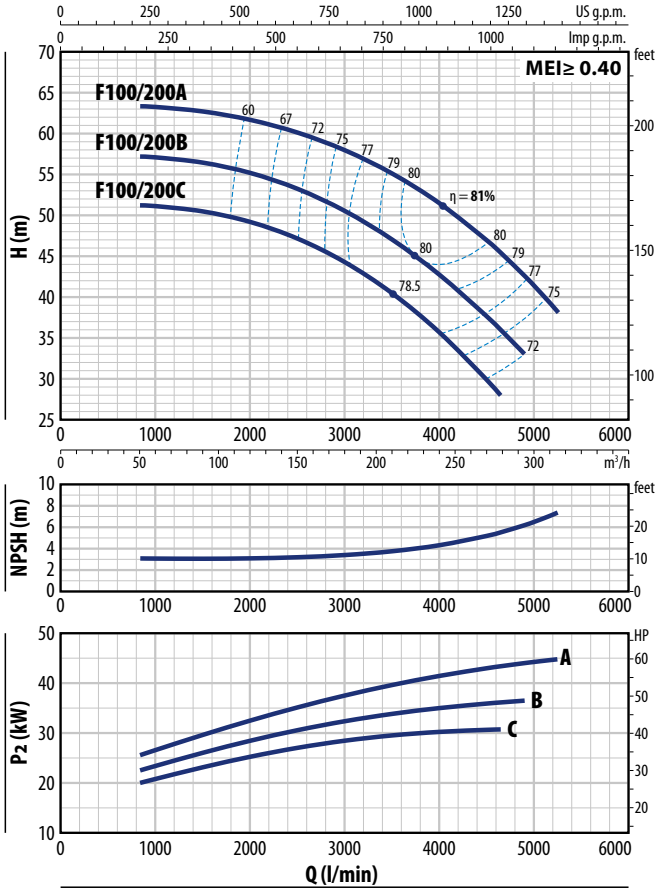

F 100/160

TYPE	POWER (P2)			Q m³/h	60	90	120	150	180	210	240	270	300	312	330
Three-phase	kW	HP	3~	Q l/min	1000	1500	2000	2500	3000	3500	4000	4500	5000	5200	5500
F 100/160C	15	20	IE3	H metres	30	29	27.5	25.5	23.5	21	18.5	15.5	12		
F 100/160B	18.5	25			34	33	31.5	30	28	25.5	22.5	19.5	16	14.5	
F 100/160A	22	30			38	37	36	34	32	30	27.5	24.5	21	20	17.5

F 100/200

TYPE	POWER (P2)			Q m³/h	0	50	96	150	180	210	240	279	294	300	315
Three-phase	kW	HP	3~	Q l/min	0	833	1600	2500	3000	3500	4000	4650	4900	5000	5250
F 100/200C	30	40	IE3	H metres	51	51	50	47	44	40.5	35.5	28			
F 100/200B	37	50			57	57	56	53	50.5	47	42.5	36	33		
F 100/200A	45	60			63	63	62.5	60	58	55	51.5	45	42.5	41.5	38

Q = Flow rate **H** = Total manometric head **HS** = Suction height

Performance curves comply with EN ISO 9906 Grade 3B tolerance limits.

CURVES AND PERFORMANCE DATA – HS=0 m

50 Hz

F 100/250

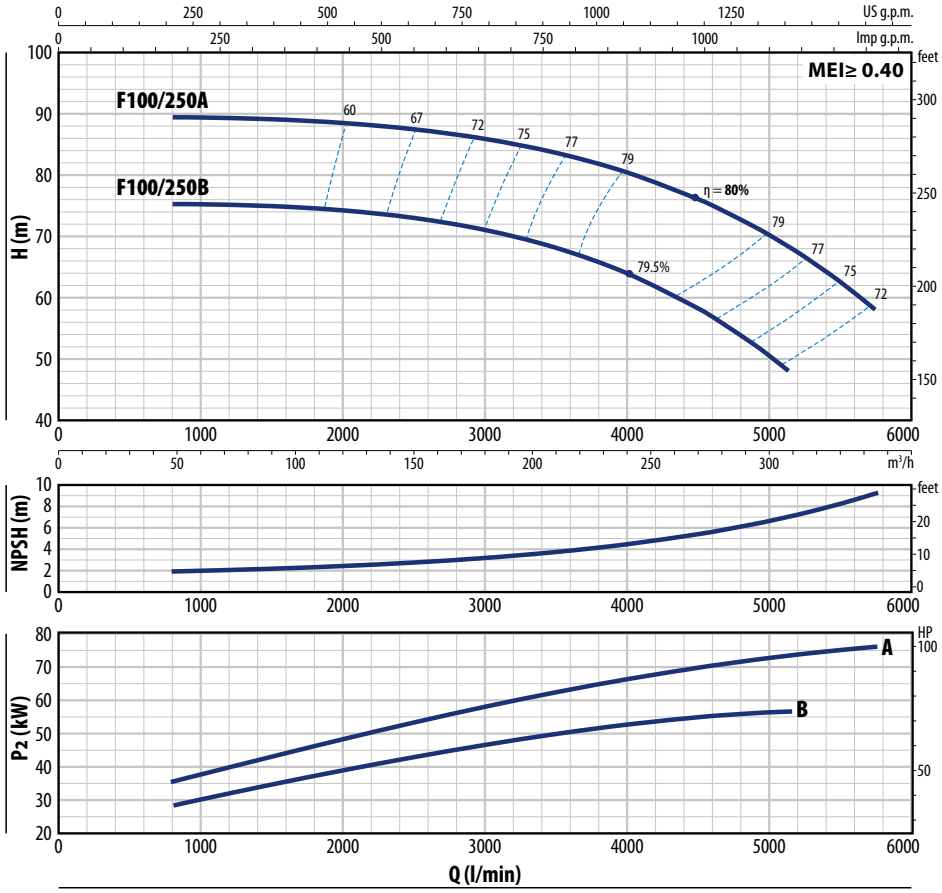

F 100/250

TYPE	POWER (P2)			Q m³/h	48	96	150	180	210	240	300	309	345
Three-phase	kW	HP	3~	Q l/min	**800**	**1600**	**2500**	**3000**	**3500**	**4000**	**5000**	**5150**	**5750**
F 100/250B	55	75	IE3	H metres	75	75	73	71	68	64	50.5	48	
F 100/250A	75	100			89	89	87.5	86	83.5	80.5	70	68	58

Q = Flow rate **H** = Total manometric head **HS** = Suction height

Performance curves comply with EN ISO 9906 Grade 3B tolerance limits.

ABSORPTION

TYPE	VOLTAGE
Single-ph.	**230 V**
Fm 32/160C	11.0 A
Fm 32/160B	12.0 A
Fm 40/125C	8.0 A
Fm 40/125B	10.0 A
Fm 40/160C	15.0 A
Fm 50/125C	13.5 A

TYPE	VOLTAGE			
Three-phase	**230 V - Δ**	**400 V - ⅄**	**400 V - Δ**	**690 V - ⅄**
F 32/160C	7.4 A	4.3 A	–	–
F 32/160B	8.6 A	5.0 A	–	–
F 32/160A	12.1 A	7.3 A	–	–
F 32/200C	17.8 A	10.3 A	–	–
F 32/200B	–	–	11.7 A	6.8 A
F 32/200A	–	-	14.9 A	8.6 A
F 32/200BH	12.6 A	7.3 A	–	–
F 32/200AH	15.4 A	8.9 A	–	–
F 32/250C	–	–	18.5 A	10.7 A
F 32/250B	–	–	22.0 A	12.7 A
F 32/250A	–	–	25.0 A	14.5 A
F 40/125C	5.2 A	3.0 A	–	–
F 40/125B	7.7 A	4.5 A	–	–
F 40/125A	9.0 A	5.2 A	–	–
F 40/160C	9.9 A	5.7 A	–	–
F 40/160B	12.6 A	7.3 A	–	–
F 40/160A	17.1 A	9.9 A	–	–
F 40/200B	–	–	12.6 A	7.3 A
F 40/200A	–	–	15.6 A	9.0 A
F 40/250C	–	–	21.0 A	12.1 A
F 40/250B	–	–	23.5 A	13.6 A
F 40/250A	–	–	30.5 A	17.6 A
F 50/125C	9.3 A	5.4 A	–	–
F 50/125B	13.1 A	7.6 A	–	–
F 50/125A	16.3 A	9.4 A	–	–
F 50/160C	15.7 A	9.1 A	–	–
F 50/160B	–	–	12.3 A	7.1 A
F 50/160A	–	–	15.5 A	9.0 A
F 50/200C	–	–	23.0 A	13.3 A
F 50/200B	–	–	29.5 A	17.1 A
F 50/200A	–	–	34.5 A	19.9 A
F 50/200AR	–	–	41.5 A	24.0 A

TYPE	VOLTAGE			
Three-phase	**230 V - Δ**	**400 V - ⅄**	**400 V - Δ**	**690 V - ⅄**
F 50/250D	–	19.0 A	19.0 A	11.0 A
F 50/250C	–	21.0 A	21.0 A	12.1 A
F 50/250B	–	27.0 A	27.0 A	15.6 A
F 50/250A	–	34.0 A	34.0 A	19.7 A
F 50/250AR	–	41.0 A	41.0 A	23.7 A
F 65/125C	17.3 A	10.0 A	–	–
F 65/125B	–	12.0 A	12.0 A	6.9 A
F 65/125A	–	16.5 A	16.5 A	9.5 A
F 65/160C	–	19.0 A	19.0 A	11.0 A
F 65/160B	–	23.0 A	23.0 A	13.3 A
F 65/160A	–	27.5 A	27.5 A	15.9 A
F 65/200B	–	30.0 A	30.0 A	17.3 A
F 65/200A	–	34.0 A	34.0 A	19.7 A
F 65/200AR	–	41.0 A	41.0 A	23.7 A
F 65/250C	–	53.0 A	53.0 A	30.6 A
F 65/250B	–	65.0 A	65.0 A	37.6 A
F 65/250A	–	79.0 A	79.0 A	45.7 A
F 80/160D	–	22.0 A	22.0 A	12.7 A
F 80/160C	–	29.0 A	29.0 A	16.8 A
F 80/160B	–	34.5 A	34.5 A	19.9 A
F 80/160A	–	39.0 A	39.0 A	22.5 A
F 80/200B	–	53.0 A	53.0 A	30.6 A
F 80/200A	–	65.0 A	65.0 A	37.6 A
F 80/250B	–	79.0 A	79.0 A	45.7 A
F 80/250A	–	98.0 A	98.0 A	56.6 A
F 100/160C	–	27.5 A	27.5 A	15.9 A
F 100/160B	–	32.5 A	32.5 A	18.8 A
F 100/160A	–	39.8 A	39.8 A	23.0 A
F 100/200C	–	53.0 A	53.0 A	30.6 A
F 100/200B	–	65.0 A	65.0 A	37.6 A
F 100/200A	–	79.0 A	79.0 A	45.7 A
F 100/250B	–	98.0 A	98.0 A	56.6 A
F 100/250A	–	126.0 A	126.0 A	72.8 A

MATERIALS AND COMPONENTS

1	**Pump body**	Cast iron, fitted with inlet and outlet flanged ports
2	**Cover/Motor bracket**	Cast iron
3	**Impeller**	Brass for F32/160 - F32/200 - F40/125 - F40/160 - F40/200 - F50/125 - F50/160 Cast iron for F32/250 - F40/250 - F50/200 - F50/250 - F65/125 - F65/160 - F65/200 - F65/250 F80/160 - F80/200 - F80/250 - F100/160 - F100/200 - F100/250

4 Mechanical seal

Water pump	Seal	Shaft	Materials
F32/160 - F40/125 - F40/160 - F50/125	**FN-20**	Ø 20 mm	Graphite Ceramic NBR
F32/200 - F40/200 - F50/160 - F65/125	**FN-24**	Ø 24 mm	
F50/200 - F65/160 - F65/200 - F80/160 - F100/160	**FN-32 NU**	Ø 32 mm	
F32/250 - F40/250 - F50/250	**FN-38**	Ø 38 mm	
F65/250 - F80/200 - F80/250B - F100/200	**FN-40 NU**	Ø 40 mm	
F80/250A - F100/250	**FH-45 NU**	Ø 45 mm	

5	**Motor shaft**	Stainless steel **AISI 431**
6	**Electric motor**	**Fm**: single-phase 230 V - 50 Hz with winding integrated thermal motor protection (up to 1.5 kW) **F**: three-phase 230/400 V 50 Hz up to 4 kW - 400/690 V 50 Hz from 5.5 to 75 kW ※ Pumps are equipped with high-efficiency motors (IEC 60034-30-1) class **IE2** for single-phase models class **IE3** for three-phase models Continuous running duty **S1**

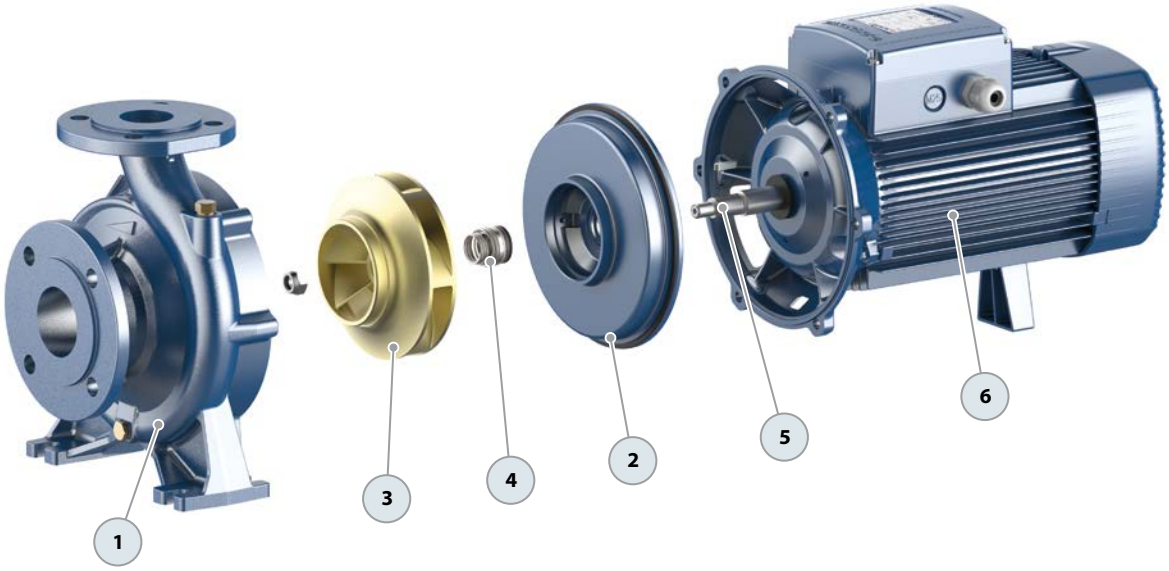

DIMENSIONS AND WEIGHT

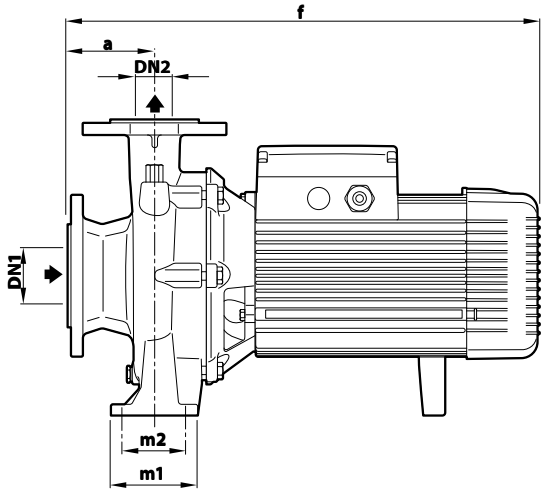

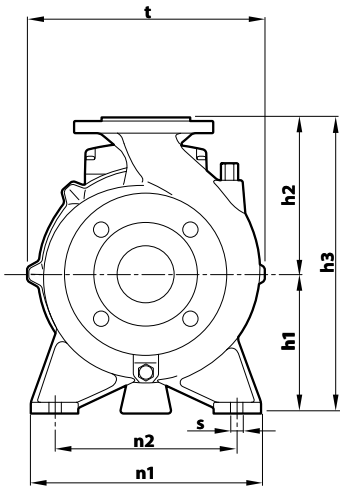

TYPE		PORTS		DIMENSIONS mm											kg	
Single-ph.	**Three-ph.**	**DN1**	**DN2**	a	f	h1	h2	h3	t	n1	n2	m1	m2	s	1~	3~
Fm 32/160C	**F 32/160C**				416										32.6	32.5
Fm 32/160B	**F 32/160B**				436	132	160	292	240			100			35.3	36.0
–	**F 32/160A**				473										–	39.0
–	**F 32/200C**			80	478					245	190		70		–	46.0
–	**F 32/200B**														–	50.0
–	**F 32/200A**	**50**	**32**		528	160	180	340	273			95			–	57.0
–	**F 32/200BH**				478										–	41.7
–	**F 32/200AH**														–	45.0
–	**F 32/250C**														–	105.0
–	**F 32/250B**			100	659	180	225	405	325	320	250	125	95		–	103.3
–	**F 32/250A**														–	121.0
Fm 40/125C	**F 40/125C**				421										31.5	31.0
Fm 40/125B	**F 40/125B**					112	140	252	244	210	160				33.0	32.4
–	**F 40/125A**			80	441										–	35.3
Fm 40/160C	**F 40/160C**				435							100	70		35.3	36.0
–	**F 40/160B**				473	132	160	292	241	240	190				–	36.1
–	**F 40/160A**	**65**	**40**												–	43.0
–	**F 40/200B**				498	160	180	340	277	265	212				–	52.4
–	**F 40/200A**				548										–	59.0
–	**F 40/250C**														–	105.0
–	**F 40/250B**				659	180	225	405	329	320	250	125	95		–	105.0
–	**F 40/250A**														–	128.5
Fm 50/125C	**F 50/125C**				455										34.4	35.1
–	**F 50/125B**				493	132	160	292	242	240	190				–	35.2
–	**F 50/125A**													14	–	42.0
–	**F 50/160C**				498		180	340	273						–	45.5
–	**F 50/160B**											100	70		–	51.0
–	**F 50/160A**				548										–	57.0
–	**F 50/200C**				669	160				265	212				–	100.0
–	**F 50/200B**	**65**	**50**				200	360	316.5						–	114.0
–	**F 50/200A**				769										–	127.0
–	**F 50/200AR**			100	768.5										–	143.0
–	**F 50/250D**														–	105.0
–	**F 50/250C**				659										–	108.0
–	**F 50/250B**					180	225	405	333	320	250				–	121.0
–	**F 50/250A**				759										–	134.0
–	**F 50/250AR**														–	149.0
–	**F 65/125C**				520		180	340	292						–	53.4
–	**F 65/125B**														–	58.0
–	**F 65/125A**				570	160				280	212				–	64.0
–	**F 65/160C**											125	95		–	100.0
–	**F 65/160B**	**80**	**65**		674		200	360	295						–	100.0
–	**F 65/160A**														–	112.0
–	**F 65/200B**				676										–	119.3
–	**F 65/200A**				776				336						–	132.0
–	**F 65/200AR**														–	147.0
–	**F 80/160D**				705	180	225	405		320	250				–	104.0
–	**F 80/160C**	**100**	**80**						330						–	121.0
–	**F 80/160B**				805										–	133.0
–	**F 80/160A**			125											–	145.0
–	**F 100/160C**				718										–	141.2
–	**F 100/160B**	**125**	**100**		818	200	280	480	382	360	280	160	120	18	–	155.0
–	**F 100/160A**				818										–	165.0

DIMENSIONS AND WEIGHT

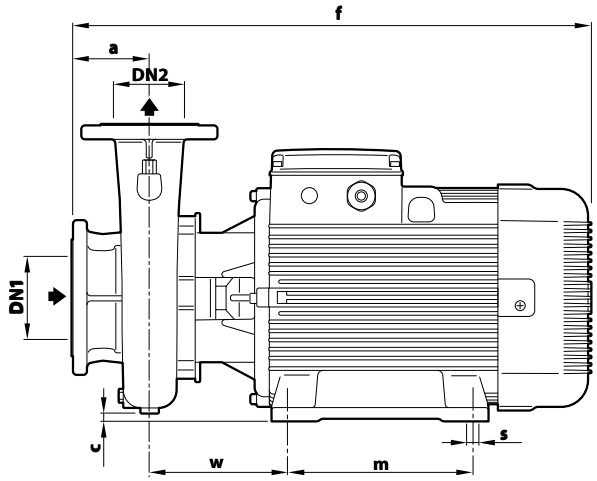

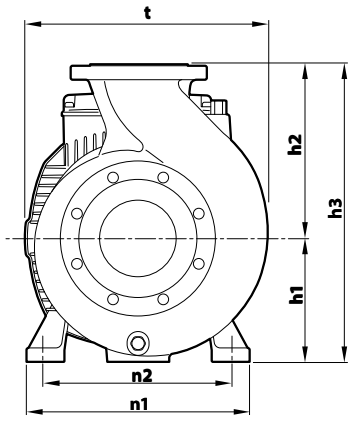

TYPE	PORTS		DIMENSIONS mm												kg
Three-ph.	**DN1**	**DN2**	a	f	h1	h2	h3	c	t	n1	n2	w	m	s	3~
F 65/250C															211.0
F 65/250B	**80**	**65**	100	809	200	250	450	15	377	360	318	214.5	305	19	225.0
F 65/250A															239.0
F 80/200B															203.0
F 80/200A	**100**	**80**	125	837	200	250	450	25	372	360	318	217.5	305	19	218.0
F 80/250B				834		280	480	5	390			214.5			249.0
F 80/250A				1015	250		620	55	490	490	400	294	350	24	547.0
F 100/200C															217.0
F 100/200B			125	839	200	280	480	–	395	360	318	219.5	305	19	231.0
F 100/200A	**125**	**100**													245.0
F 100/250B			140	1060	250	280	620	40	485	485	406	313	350	24	551.2
F 100/250A															544.3

PORT FLANGES

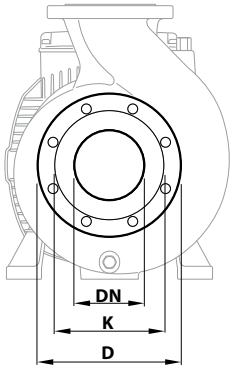

DN FLANGE	D	K	HOLES	
mm	mm	mm	N°	Ø (mm)
32	140	100	4	18
40	150	110		
50	165	125		
65	185	145		
80	200	160	8	
100	220	180		
125	250	210		

COUNTER-FLANGE

(CAN BE ORDERED SEPARATELY)

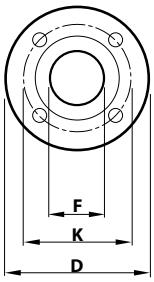

DN FLANGE	F	D	K	HOLES	
mm	COUNTER-FLANGE	mm	mm	N°	Ø (mm)
32	1¼"	140	100	4	18
40	1½"	150	110		
50	2"	165	125		
65	2½"	185	145		
80	3"	200	160	8	
100	4"	220	180		
125	5"	250	210		

F-I EN 733" stainless steel standardised pumps

Clean water

Industrial use

※ **Pump entirely made of AISI 316 stainless steel**

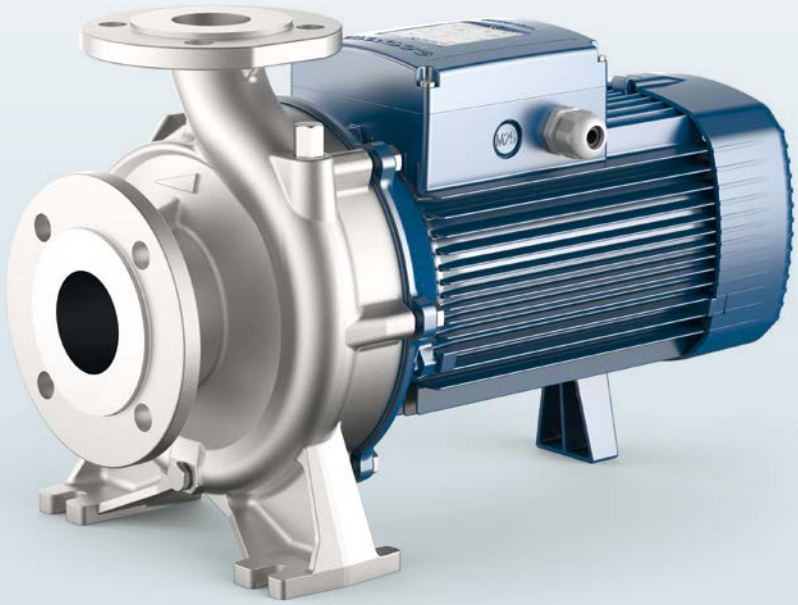

PERFORMANCE RANGE

- Flow rate up to **2200 l/min** (132 m³/h)
- Head up to **37 m**
- Power from **4** to **7.5 kW**

INSTALLATION AND USE

Designed to transfer clean water free from abrasive particles and liquids that will not damage the pump's components.

- Water supply
- Pressurization
- Irrigation
- Water circulation in air conditioning systems
- Power washing systems
- Firefighting systems
- Industrial applications
- Agriculture applications

ELECTRIC MOTOR

The three-phase pumps are equipped with newly developed electric motors designed to work with inverters, which guarantee stable and quiet operation.

Efficiency class **IE3** for three-phase motors, **IE2** for single-phase motors, class F insulation and IP55 protection.

APPLICATION LIMITS

- Manometric suction head up to **7 m**
- Liquid temperature between **-10 °C** and **+90 °C**
- Ambient temperature between **-10 °C** and **+40 °C**
- Maximum pressure in the pump body **10 bar** (PN10)

AVAILABLE UPON REQUEST

※ Mechanical seal options available
※ Different voltage requirements 60 Hz frequency
※ Handling of liquids with higher or lower temperatures
※ Adaptability to operate in high or low temperature environments

PERFORMANCE DATA

MEI≥ 0.40 **50 Hz**

TYPE	POWER (P2)			PERFORMANCE					
Three-phase	**kW**	**HP**	**3~**	**Q** l/min	**H** m	**Q** l/min	**H** m	**Q** l/min	**H** m
F 50/160C-I	4	5.5		**300**	27	**800**	20	**1000**	16
F 50/160B-I	5.5	7.5	**IE3**	**300**	32	**900**	26	**1100**	21
F 50/160A-I	7.5	10		**300**	37	**900**	32	**1100**	27
F 65/125C-I	4	5.5		**600**	16	**1600**	12.5	**1800**	11
F 65/125B-I	5.5	7.5	**IE3**	**600**	18	**1800**	14.5	**2000**	13
F 65/125A-I	7.5	10		**600**	23	**1800**	21	**2200**	18

Q = Flow rate **H** = Total manometric head **HS** = Suction height

Performance curves comply with EN ISO 9906 Grade 3B tolerance limits.

MATERIALS AND COMPONENTS

1	**Pump body**	Stainless steel **AISI 316**		
2	**Cover**	Stainless steel **AISI 316**		
3	**Impeller**	Stainless steel **AISI 316**		
4	**Mechanical seal**	Type	Shaft	Materials
		FN-24SV	Ø 24 mm	Silicon carbide / Silicon carbide / Viton
5	**Motor shaft**	Stainless steel **AISI 316L**		

6 Electric motor

Three-phase 230/400 V - 50 Hz for 4 kW 400/690 V - 50 Hz 5.5 to 7.5 kW

※ The pumps are equipped with high-efficiency motors (IEC 60034-30-1) in class **IE3**

Continuous running duty **S1**

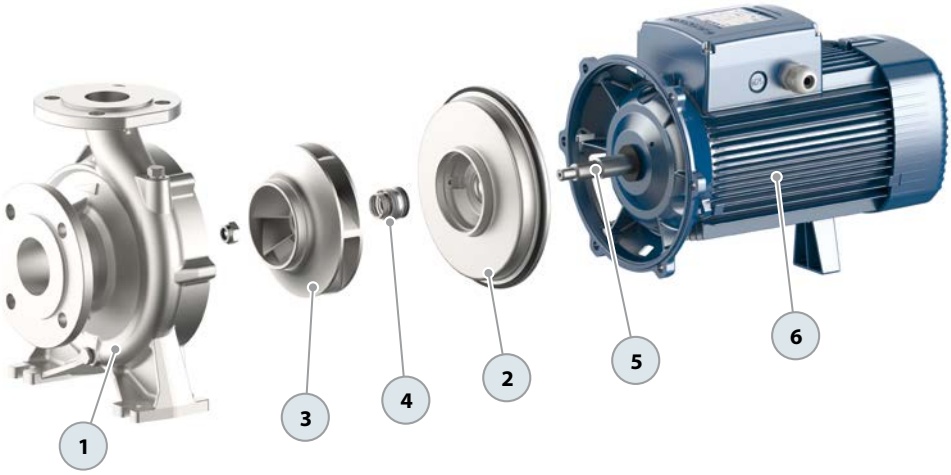

DIMENSIONS AND WEIGHT

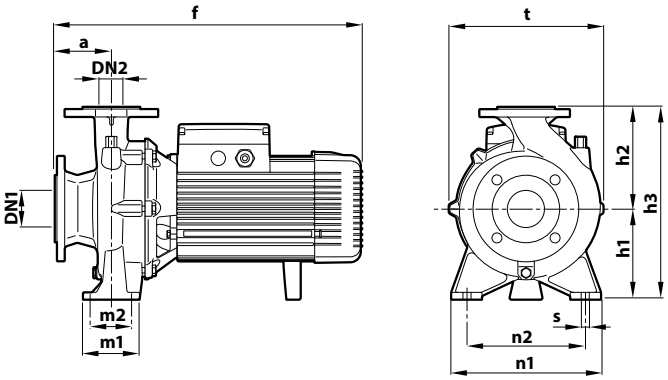

ABSORPTION

TYPE	VOLTAGE			
Three-phase	**230 V - Δ**	**400 V - ⅄**	**400 V - Δ**	**690 V - ⅄**
F 50/160C-I	15.7 A	9.1 A	–	–
F 50/160B-I	–	–	12.3 A	7.1 A
F 50/160A-I	–	–	15.5 A	9.0 A
F 65/125C-I	17.3 A	10.0 A	–	–
F 65/125B-I	–	–	12.0 A	6.9 A
F 65/125A-I	–	–	16.5 A	9.5 A

TYPE	PORTS		DIMENSIONS mm											kg
Three-phase	**DN1**	**DN2**	a	f	h1	h2	h3	t	n1	n2	m1	m2	s	3~
F 50/160C-I	**65**	**50**	100	498	160	180	340	269	265	212	100	70	14	49.0
F 50/160B-I														55.0
F 50/160A-I				548										62.0
F 65/125C-I	**80**	**65**		520				291	280		125	95		58.2
F 65/125B-I														62.1
F 65/125A-I				570										68.0

F4 EN 733" standardised centrifugal pumps n= 1450 min^{-1}

Clean water

Industrial use

PERFORMANCE RANGE

- Flow rate up to **2900 l/min** (174 m³/h)
- Head up to **23.8 m**
- Power from **0.37** to **9.2 kW**

INSTALLATION AND USE

- Designed to transfer clean water free from abrasive particles and liquids that will not damage the pump's components.
- Water supply
- Pressurization
- Irrigation
- Water circulation in air conditioning systems
- Power washing systems
- Firefighting systems
- Industrial applications
- Agriculture applications

Installation is to be carried out in well-ventilated enclosed locations or otherwise protected from the weather.

ELECTRIC MOTOR

The three-phase pumps are equipped with newly developed electric motors designed to work with inverters, which guarantee stable and quiet operation.

Efficiency class **IE3** for three-phase motors, **IE2** for single-phase motors, class F insulation and IP55 protection.

APPLICATION LIMITS

- Manometric suction head up to **7 m**
- Liquid temperature between **-10 °C** and **+90 °C**
- Ambient temperature between **-10 °C** and **+40 °C**
- Maximum pressure in the pump body **10 bar (PN10)**

AVAILABLE UPON REQUEST

※ Different voltage requirements 60 Hz frequency
※ Handling of liquids with higher or lower temperatures
※ Adaptability to operate in high or low temperature environments

※ Counterflange KIT including screws, nuts and gaskets

PERFORMANCE RANGE – n= 1450 min^{-1} 50 Hz

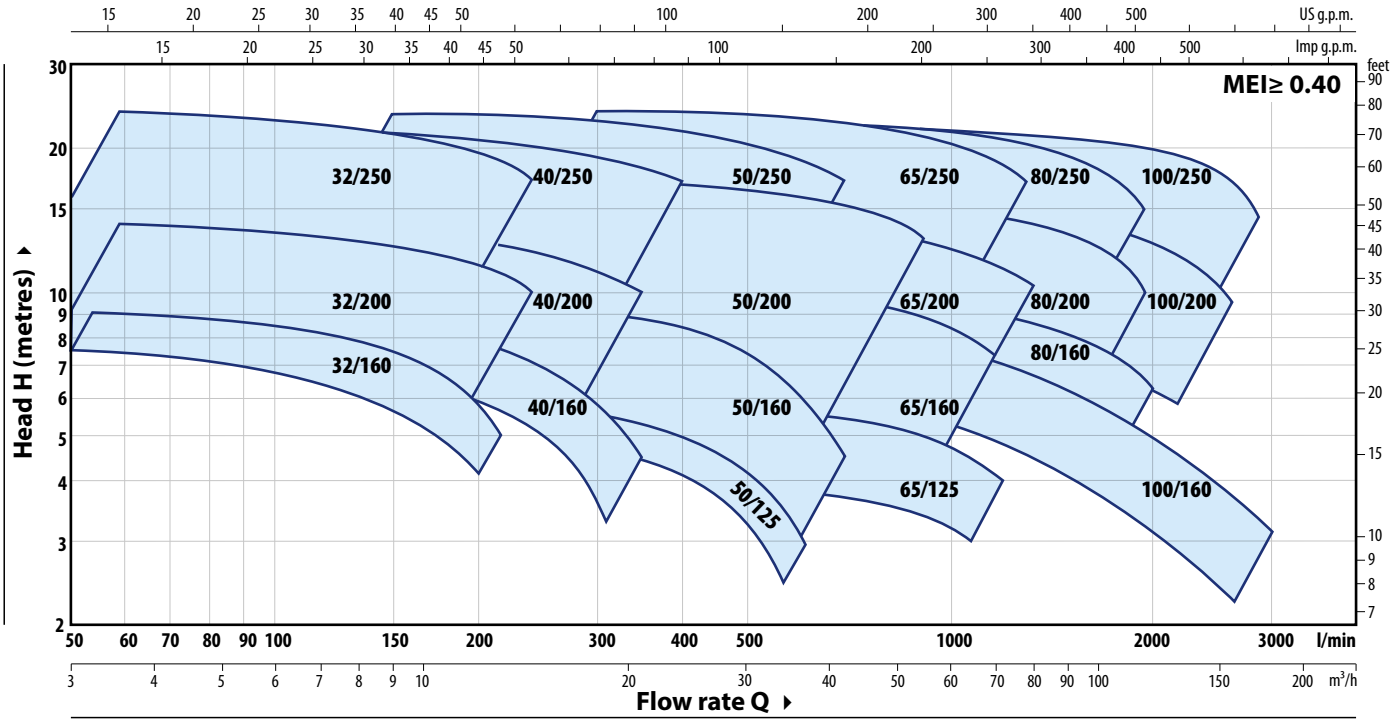

PERFORMANCE DATA – n= 1450 min^{-1} 50 Hz

TYPE	POWER (P2)		PERFORMANCE					
Three-ph.	kW	HP	Q l/min	H m	Q l/min	H m	Q l/min	H m
F4-32/160B	0.37	0.5	50	7.5	165	5.6	200	4.5
F4-32/160A	0.37	0.5	50	9	175	6.8	225	5
F4-32/200B	0.75	1	50	12.5	230	9.5	250	9
F4-32/200A	1.1	1.5	50	14	240	10.8	250	10.5
F4-32/200BH	0.75	1	50	11.3	140	9.6	150	9.2
F4-32/200AH	0.75	1	50	13.8	150	11.5	160	11
F4-32/250C	1.1	1.5	50	18.4	220	15	220	15
F4-32/250B	1.5	2	50	21.7	250	17.4	250	17.4
F4-32/250A	2.2	3	50	23.8	270	18.7	270	18.7
F4-40/160B	0.37	0.5	50	7.5	220	6.0	320	3.5
F4-40/160A	0.55	0.75	50	9	245	7.1	350	4.5
F4-40/200B	0.75	1	50	11.5	280	8.9	350	7
F4-40/200A	1.1	1.5	50	13.8	310	10.9	350	10
F4-40/250C	1.1	1.5	50	15.5	320	12.4	400	10
F4-40/250B	1.5	2	50	17.5	330	14.2	400	12
F4-40/250A	2.2	3	50	22	380	17.5	400	17
F4-50/125B	0.55	0.75	150	5	420	4.0	600	2
F4-50/125A	0.55	0.75	150	6	450	4.8	600	3
F4-50/160B	0.75	1	150	8	440	6.5	650	3.8
F4-50/160A	1.1	1.5	150	9.3	460	7.8	700	4.5
F4-50/200C	1.5	2	200	11	660	9.3	850	7.5
F4-50/200B	2.2	3	200	13	720	10.9	850	9.5
F4-50/200A	2.2	3	200	15	770	12.8	900	11.2
F4-50/200AR	3	4	200	17	800	14.5	900	13.2
F4-50/250D	1.1	1.5	150	12.5	425	10.1	650	5
F4-50/250C	1.5	2	150	14	450	11.2	700	5
F4-50/250B	2.2	3	150	18	510	14.6	700	10.5
F4-50/250A	2.2	3	150	20	550	16.3	700	13
F4-50/250AR	3	4	150	23.5	570	19.9	700	17

TYPE	POWER (P2)		PERFORMANCE					
Three-ph.	kW	HP	Q l/min	H m	Q l/min	H m	Q l/min	H m
F4-65/125B	0.75	1	300	4.7	900	3.8	1100	3
F4-65/125A	1.1	1.5	300	5.7	1000	4.7	1200	4
F4-65/160C	1.1	1.5	300	8	910	6.7	1100	5.5
F4-65/160B	1.5	2	300	9.1	950	7.6	1200	5.7
F4-65/160A	2.2	3	300	10.1	990	8.5	1200	7
F4-65/200A	2.2	3	300	12	1100	9.6	1250	8.5
F4-65/200AR	3	4	300	14	1140	11.2	1300	10
F4-65/250B	4	5.5	200	21.8	980	18.8	1250	15.5
F4-65/250A	5.5	7.5	200	23.5	1000	20.6	1300	17
F4-80/160D	1.5	2	300	6.3	1400	4.8	2000	2.5
F4-80/160C	2.2	3	300	7.5	1480	5.7	2000	3.8
F4-80/160B	2.2	3	300	8.8	1580	6.8	2000	5
F4-80/160A	3	4	300	10	1660	7.7	2000	6.2
F4-80/200B	4	5.5	300	14	1540	10.9	1800	9
F4-80/200A	5.5	7.5	300	15.5	1625	12.6	1900	10.5
F4-80/250B	5.5	7.5	300	19.5	1500	16.1	1800	13.5
F4-80/250A	7.5	10	300	22	1400	19.9	1950	15
F4-100/160B	2.2	3	400	8.3	1950	5.7	2600	3.5
F4-100/160A	3	4	400	10	2060	6.9	2800	4.7
F4-100/200C	4	5.5	400	12.7	1850	9.6	2300	7
F4-100/200B	5.5	7.5	400	14.2	1950	10.9	2400	8.5
F4-100/200A	5.5	7.5	400	15.8	2050	12.6	2600	9.5
F4-100/250B	7.5	10	400	18.5	1950	15.9	2600	11.5
F4-100/250A	9.2	12.5	400	22	2100	19.3	2900	13.5

Q = Flow Rate
H = Total manometric head
Performance curves comply with EN ISO 9906 Grade 3B tolerance limits.

DIMENSIONS AND WEIGHT

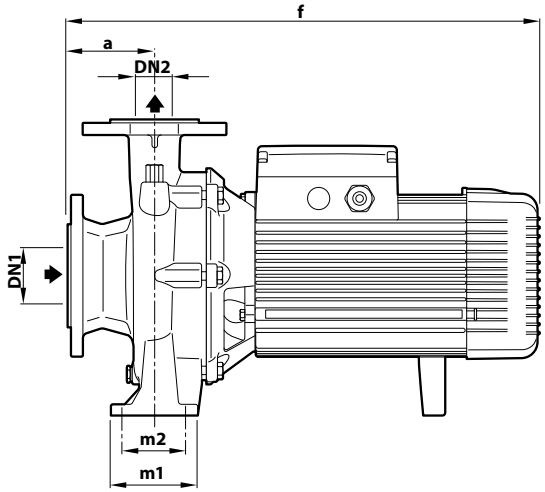

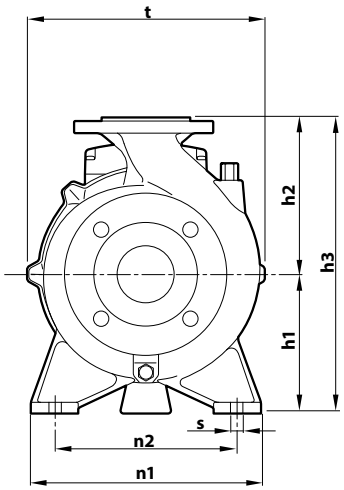

TYPE	PORTS		DIMENSIONS mm											kg
Three-phase	**DN1**	**DN2**	a	f	h3	h1	h2	t	n2	n1	m1	m2	s	
F4-32/160B	**50**	**32**	80	412	292	132	160	242	190	240	100	70	14	31.2
F4-32/160A														31.2
F4-32/200B				478	340	160	180	270			95			43.0
F4-32/200A														43.5
F4-32/200BH														37.9
F4-32/200AH														42.4
F4-32/250C			100	531	405	180	225	330	250	320	125	95		64.1
F4-32/250B														63.1
F4-32/250A				581										68.7
F4-40/160B	**65**	**40**	80	412	292	132	160	240	190	240	100	70	14	32.5
F4-40/160A														32.9
F4-40/200B			100	498	340	160	180	275	212	265				46.0
F4-40/200A														46.2
F4-40/250C				531	405	180	225	328	250	320	125	95		60.1
F4-40/250B														60.1
F4-40/250A				581										72.4
F4-50/125B	**65**	**50**	100	431	292	132	160	242	190	240	100	70	14	32.2
F4-50/125A														32.2
F4-50/160B				498	340	160	180	269	212	265				44.4
F4-50/160A														44.6
F4-50/200C				538	360		200	316						59.2
F4-50/200B				589										68.3
F4-50/200A														68.5
F4-50/200AR														68.8
F4-50/250D				531	405	180	225	337	250	320	125	95		59.9
F4-50/250C														63.3
F4-50/250B				581										68.7
F4-50/250A														69.1
F4-50/250AR														78.0
F4-65/125B	**80**	**65**	100	520	340	160	180	291	212	280	125	95	14	50.2
F4-65/125A														50.4
F4-65/160C				542	360		200	300						55.0
F4-65/160B														58.7
F4-65/160A				592										65.0
F4-65/200A				595	405	180	225	340	250	320				72.0
F4-65/200AR														78.4
F4-65/250B				680	450	200	250	373	280	360	160	120	18	111.2
F4-65/250A														139.6

DIMENSIONS AND WEIGHT

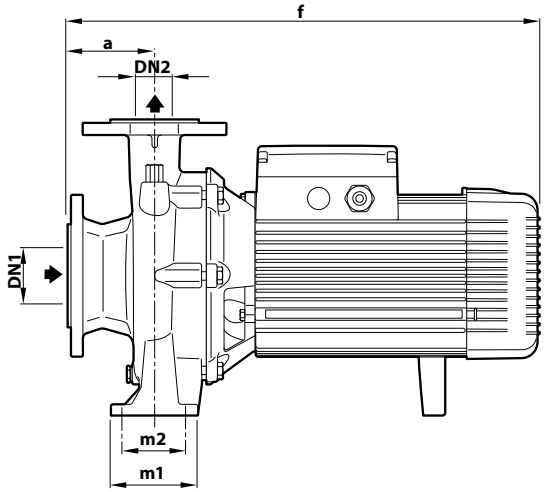

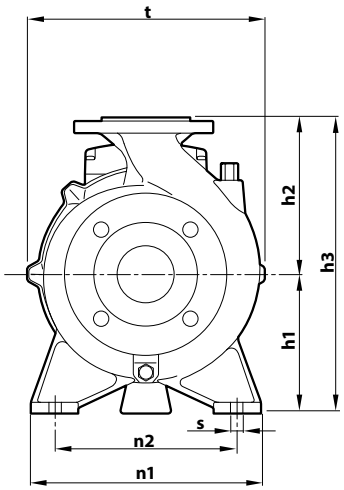

TYPE	PORTS		DIMENSIONS mm											kg
Three-phase	**DN1**	**DN2**	a	f	h3	h1	h2	t	n2	n1	m1	m2	s	
F4-80/160D	**100**	**80**	125	574	405	180	225	330	250	320	125	95	14	66.0
F4-80/160C				624										67.3
F4-80/160B														70.0
F4-80/160A														76.4
F4-80/200B				709	430		250	360	280	345				100.0
F4-80/200A														130.2
F4-80/250B				727	480	200	280	405	315	400	160	120	18	123.0
F4-80/250A														137.6
F4-100/160B	**125**	**100**	125	638	480	200	280	362	280	360	160	120	18	96.2
F4-100/160A														97.0
F4-100/200C				711				391						124.1
F4-100/200B														116.0
F4-100/200A														122.0
F4-100/250B			140	747	505	225		422	315	400				143.0
F4-100/250A														156.0

PORT FLANGES

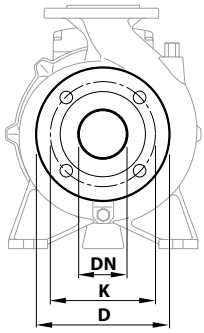

DN FLANGE mm	D mm	K mm	HOLES N°	HOLES Ø (mm)
32	140	100	4	18
40	150	110		
50	165	125		
65	185	145		
80	200	160	8	
100	220	180		
125	250	210		

COUNTER-FLANGE

(CAN BE ORDERED SEPARATELY)

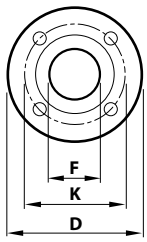

DN FLANGE mm	F COUNTER-FLANGE	D mm	K mm	HOLES N°	HOLES Ø (mm)
32	1¼"	140	100	4	18
40	1½"	150	110		
50	2"	165	125		
65	2½"	185	145		
80	3"	200	160	8	
100	4"	220	180		
125	5"	250	210		

ABSORPTION

TYPE	VOLTAGE	
Three-phase	**230 V - Δ**	**400 V - ⅄**
F4-32/160B	1.9 A	1.1 A
F4-32/160A	2.2 A	1.3 A
F4-32/200B	3.6 A	2.1 A
F4-32/200A	4.0 A	2.3 A
F4-32/200BH	3.3 A	1.9 A
F4-32/200AH	3.5 A	2.0 A
F4-32/250C	5.7 A	3.3 A
F4-32/250B	7.3 A	4.2 A
F4-32/250A	9.5 A	5.5 A
F4-40/160B	1.7 A	1.0 A
F4-40/160A	2.8 A	1.6 A
F4-40/200B	3.6 A	2.1 A
F4-40/200A	4.2 A	2.4 A
F4-40/250C	5.5 A	3.2 A
F4-40/250B	6.1 A	3.5 A
F4-40/250A	9.5 A	5.5 A
F4-50/125B	2.2 A	1.3 A
F4-50/125A	2.6 A	1.5 A
F4-50/160B	3.3 A	1.9 A
F4-50/160A	4.2 A	2.4 A
F4-50/200C	6.1 A	3.5 A
F4-50/200B	8.0 A	4.6 A
F4-50/200A	9.0 A	5.2 A
F4-50/200AR	10.6 A	6.1 A
F4-50/250D	4.8 A	2.8 A
F4-50/250C	5.9 A	3.4 A
F4-50/250B	9.9 A	5.7 A
F4-50/250A	11.1 A	6.4 A
F4-50/250AR	11.8 A	6.8 A
F4-65/125B	3.6 A	2.1 A
F4-65/125A	4.5 A	2.6 A
F4-65/160C	5.2 A	3.0 A
F4-65/160B	5.9 A	3.4 A
F4-65/160A	7.8 A	4.5 A

TYPE	VOLTAGE	
Three-phase	**230 V - Δ**	**400 V - ⅄**
F4-65/200A	9.0 A	5.2 A
F4-65/200AR	11.8 A	6.8 A
F4-65/250B	17.3 A	10.0 A
F4-65/250A	21.7 A	13.5 A
F4-80/160D	5.9 A	3.4 A
F4-80/160C	10.0 A	5.8 A
F4-80/160B	10.2 A	5.9 A
F4-80/160A	10.6 A	6.1 A
F4-80/200B	13.8 A	8.0 A
F4-80/200A	18.2 A	10.5 A
F4-80/250B	20.8 A	12.5 A
F4-80/250A	25.6 A	14.8 A
F4-100/160B	9.0 A	5.2 A
F4-100/160A	13.0 A	7.5 A
F4-100/200C	14.2 A	8.2 A
F4-100/200B	17.8 A	10.3 A
F4-100/200A	20.8 A	12.0 A
F4-100/250B	26.8 A	15.5 A
F4-100/250A	34.1 A	19.7 A

MATERIALS AND COMPONENTS

1	**Pump body**	Cast iron, fitted with inlet and outlet flanged ports			
2	**Cover**	Cast iron			
3	**Impeller**	Brass	for F4-32/160 - 32/200 - 40/160 - 40/200 - 50/125 - 50/160		
		Cast iron	for F4-32/250 - 40/250 - 50/200 - 50/250 - 65/125 - 65/160 - 65/200 - 65/250 F4-80/160 - 80/200 - 80/250 - 100/160 - 100/200 - 100/250		
4	**Mechanical seal**	Water pump	Seal	Shaft	Materials
		F4-32/160 F4-40/160 F4-50/125	**FN-20**	Ø 20 mm	Graphite / Ceramic / NBR
		F4-32/200 F4-40/200 F4-50/160 F4-65/125	**FN-24**	Ø 24 mm	Graphite / Ceramic / NBR
		F4-50/200 F4-65/200 F4-65/160 F4-80/160 F4-100/160	**FN-32 NU**	Ø 32 mm	Graphite / Ceramic / NBR
		F4-32/250 F4-40/250 F4-50/250	**FN-38**	Ø 38 mm	Graphite / Ceramic / NBR
		F4-65/250 F4-80/200 F4-100/200	**FN-40 NU**	Ø 40 mm	Graphite / Ceramic / NBR
		F4-80/250 F4-100/250	**FH-45 NU**	Ø 45 mm	Graphite / Ceramic / NBR
5	**Motor shaft**	Stainless steel **AISI 431**			
6	**Electric motor**	**F4**: 4-pole three-phase 230/400 V - 50 Hz ※ The pumps are equipped with high-efficiency motors (IEC 60034-30-1) class **IE3** Continuous running duty **S1**			

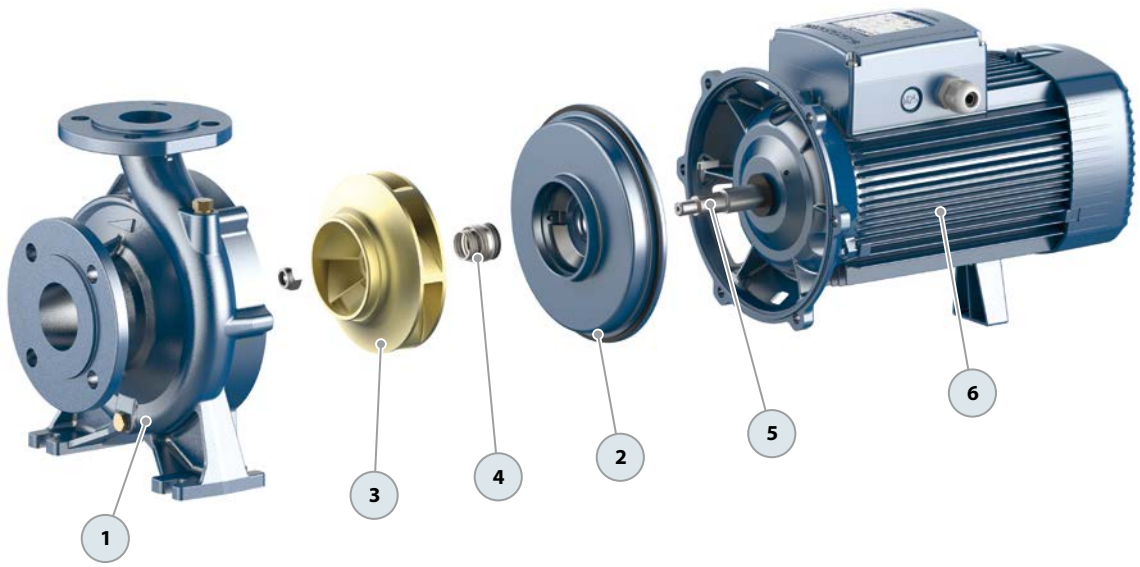

FG EN 733" standardised centrifugal pumps

Clean water

Civil use

Industrial use

Agricultural use

PERFORMANCE RANGE

- Flow rate up to **5750 l/min** (345 m³/h)
- Head up to **98 m**

INSTALLATION AND USE

Standardized centrifugal pumps equipped with a support structure and built according to EN733 standard.

Designed to transfer clean water free from abrasive particles and liquids that will not damage the pump's components.

- **Water supply**
- **Pressurization**
- **Irrigation**
- **Firefighting systems**
- **Industrial applications**
- **Agriculture applications**
- **Civil, industrial, and agricultural applications**
- **Air conditioning, cooling, heating, and circulation systems**

APPLICATION LIMITS

- Manometric suction head up to **7 m**
- Liquid temperature between **-10 °C** and **+90 °C**
- Maximum pressure in the pump body **10 bar** (PN10)

AVAILABLE UPON REQUEST

※ Mechanical seal options available
※ Pumps for motors with 60 Hz frequency
※ Handling of liquids with higher or lower temperatures
※ Adaptability to operate in high or low temperature environments

※ Counterflange KIT including screws, nuts and gaskets

PERFORMANCE RANGE – n= 2900 min^{-1}

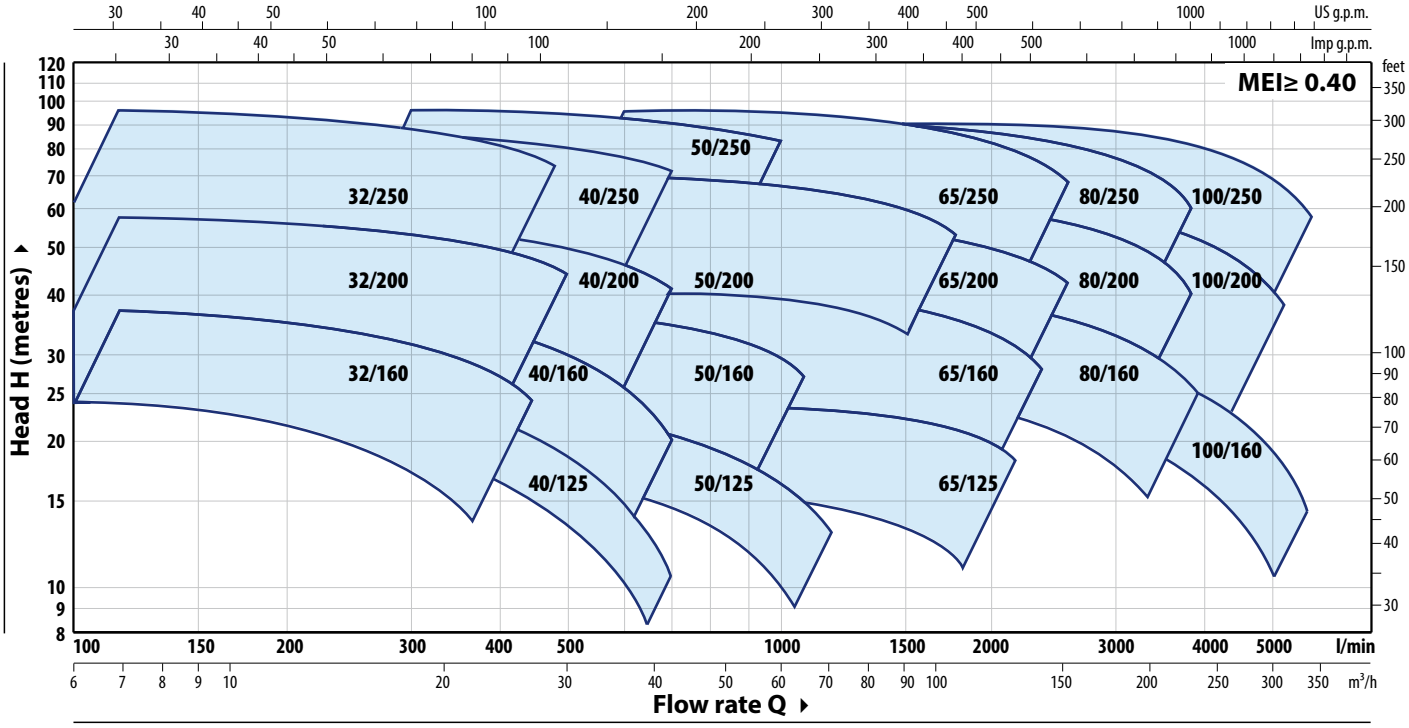

PERFORMANCE DATA – n= 2900 min^{-1}

TYPE	MOTOR TO BE COUPLED		PERFORMANCE n= 2900 min^{-1}					
	kW	HP	Q m³/h	H m	Q m³/h	H m	Q m³/h	H m
FG2-32/160C	1.5	2	6	24	16	19.8	21	14
FG2-32/160B	2.2	3	6	30	18	23.6	24	17
FG2-32/160A	3	4	6	37	20.4	30.2	27	24
FG2-32/200C	4	5.5	6	44	27	31.5	27	31.5
FG2-32/200B	5.5	7.5	6	51	28	37.7	30	36
FG2-32/200A	7.5	10	6	57	29	45.3	30	44
FG2-32/200BH	3	4	6	45	17	38.4	18	37
FG2-32/200AH	4	5.5	6	55	18	46.1	19.2	44
FG2-32/250C	9.2	12.5	6	75	28	58.6	27	60
FG2-32/250B	11	15	6	87	32	67.6	30	70
FG2-32/250A	15	20	6	97	35	73.6	30	80
FG2-40/125C	1.1	1.5	6	16	23	12.0	33	6
FG2-40/125B	1.5	2	6	20.5	26	15.1	36	9
FG2-40/125A	2.2	3	6	26	29	19.3	42	10
FG2-40/160C	2.2	3	6	27	25	22.0	36	14
FG2-40/160B	3	4	6	32	27	25.9	36	20
FG2-40/160A	4	5.5	6	38	30	30.2	42	20
FG2-40/200B	5.5	7.5	6	47	33	36.3	42	28
FG2-40/200A	7.5	10	6	55	36	46.2	42	41
FG2-40/250C	9.2	12.5	6	64	39	49.9	42	47
FG2-40/250B	11	15	6	71	40	56.8	42	55
FG2-40/250A	15	20	6	88	42	72.0	42	72
FG2-50/125C	2.2	3	18	17.5	49	13.0	72	6
FG2-50/125B	3	4	18	20.7	51	15.6	72	9
FG2-50/125A	4	5.5	18	23.5	55	18.4	72	13
FG2-50/160C	4	5.5	18	27	48	20.7	60	16
FG2-50/160B	5.5	7.5	18	32	52	26.3	72	18
FG2-50/160A	7.5	10	18	37	54	32.1	81	20
FG2-50/200C	11	15	24	44	82	37.0	102	30
FG2-50/200B	15	20	24	52	86	43.7	102	38
FG2-50/200A	18.5	25	24	61	91	52.0	108	45
FG2-50/200AR	22	30	24	69	96	58.2	108	53
FG2-50/250D	9.2	12.5	18	51	53	37.6	54	37
FG2-50/250C	11	15	18	59	60	43.0	60	43
FG2-50/250B	15	20	18	72	60	59.0	60	59
FG2-50/250A	18.5	25	18	85	60	73.0	60	73
FG2-50/250AR	22	30	18	95	60	83.0	60	83

TYPE	MOTOR TO BE COUPLED		PERFORMANCE n= 2900 min^{-1}					
	kW	HP	Q m³/h	H m	Q m³/h	H m	Q m³/h	H m
FG2-65/125C	4	5.5	36	16	96	12.6	108	11
FG2-65/125B	5.5	7.5	36	18	101	15.4	120	13
FG2-65/125A	7.5	10	36	23	108	20.9	132	18
FG2-65/160C	9.2	12.5	36	32	108	27.0	132	22
FG2-65/160B	11	15	36	36.5	113	30.3	144	23
FG2-65/160A	15	20	36	40.5	114	35.0	144	28
FG2-65/200B	15	20	12	44	129	34.4	144	30.5
FG2-65/200A	18.5	25	12	50	143	38.4	150	36.5
FG2-65/200AR	22	30	12	57	136	47.0	156	42
FG2-65/250C	30	40	24	76	111	64.7	141	53
FG2-65/250B	37	50	24	87	120	74.3	150	62
FG2-65/250A	45	60	24	95	126	80.7	156	68
FG2-80/160D	11	15	30	25	171	19.1	240	10
FG2-80/160C	15	20	30	30	178	23.4	240	15
FG2-80/160B	18.5	25	30	35	185	27.7	240	20
FG2-80/160A	22	30	30	40	190	32.1	240	25
FG2-80/200B	30	40	30	56	166	46.5	219	34.5
FG2-80/200A	37	50	30	62	180	53.0	234	40
FG2-80/250B	45	60	36	77	170	65.9	216	54
FG2-80/250A	55	75	36	88.5	180	77.3	234	60
FG2-100/160C	15	20	60	30	220	20.3	300	12
FG2-100/160B	18.5	25	60	34	234	23.1	312	14.5
FG2-100/160A	22	30	60	38	250	26.4	330	17.5
FG2-100/200C	30	40	48	51	216	39.6	279	28
FG2-100/200B	37	50	48	57	228	44.5	294	33
FG2-100/200A	45	60	48	63	245	50.6	315	38
FG2-100/250B	55	75	48	75	250	62.0	309	48
FG2-100/250A	75	100	48	89	270	76.0	345	58

Q = Flow Rate

H = Total manometric head

Performance curves comply with EN ISO 9906 Grade 3B tolerance limits.

FG4

PERFORMANCE RANGE – n= 1450 min^{-1}

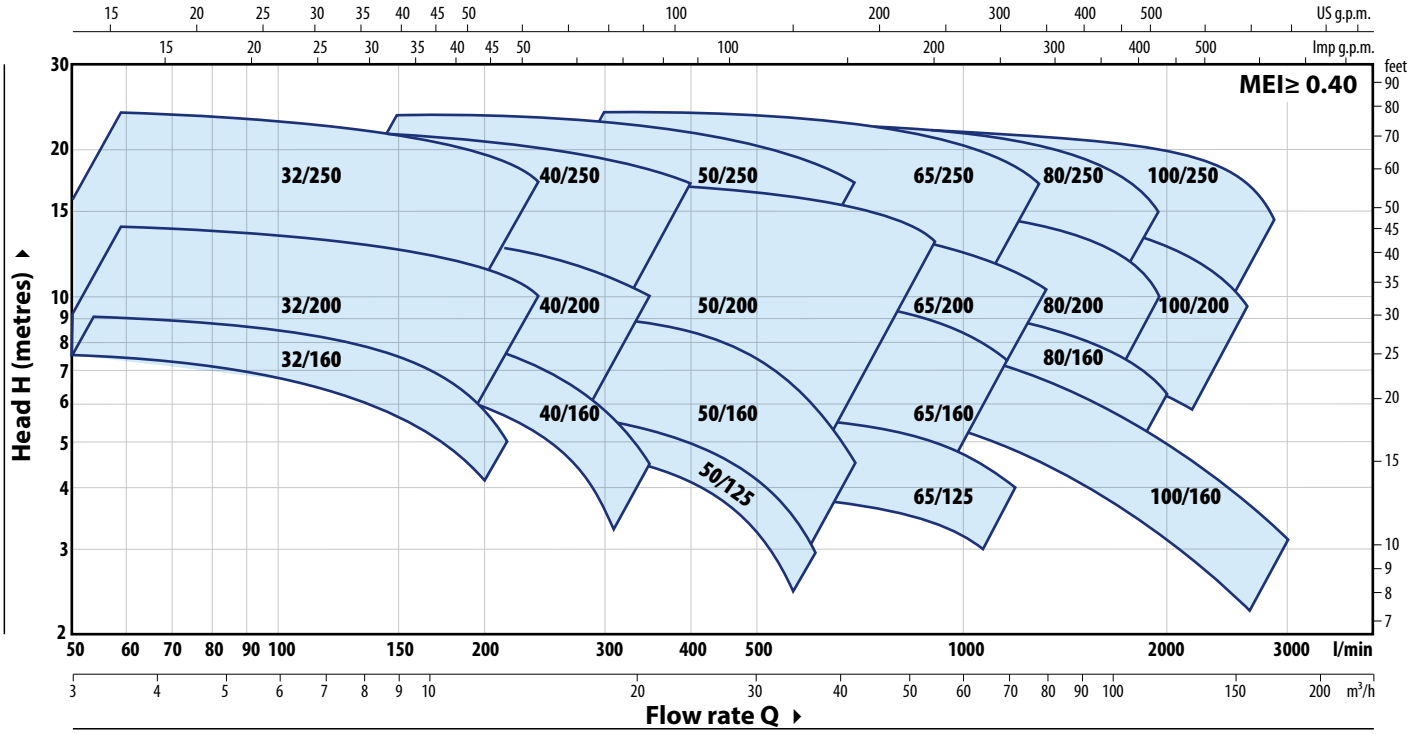

PERFORMANCE DATA – n= 1450 min^{-1}

TYPE	MOTOR TO BE COUPLED		PERFORMANCE n= 1450 min^{-1}					
	kW	HP	Q m³/h	H m	Q m³/h	H m	Q m³/h	H m
FG4-32/160C	0.25	0.33	**3**	6	**8**	4.8	**10.5**	3.5
FG4-32/160B	0.37	0.5	**3**	7.5	**9.9**	5.6	**12**	4.5
FG4-32/160A	0.37	0.5	**3**	9	**10.5**	6.8	**13.5**	5
FG4-32/200C	0.55	0.75	**3**	11	**12**	8.5	**13.5**	8
FG4-32/200B	0.75	1	**3**	12.5	**13.8**	9.5	**15**	9
FG4-32/200A	1.1	1.5	**3**	14	**14.4**	10.8	**15**	10.5
FG4-32/200BH	0.75	1	**3**	11.3	**8.4**	9.6	**9**	9.2
FG4-32/200AH	0.75	1	**3**	13.8	**9**	11.5	**9.6**	11
FG4-32/250C	1.1	1.5	**3**	18.4	**13.5**	14.8	**13.2**	15
FG4-32/250B	1.5	2	**3**	21.7	**15**	17.4	**15**	17.4
FG4-32/250A	2.2	3	**3**	23.8	**16.2**	18.7	**16.2**	18.7
FG4-40/160C	0.37	0.5	**3**	6.5	**12**	5.5	**18**	3.5
FG4-40/160B	0.37	0.5	**3**	7.5	**13.2**	6.0	**19.2**	3.5
FG4-40/160A	0.55	0.75	**3**	9	**14.7**	7.1	**21**	4.5
FG4-40/200B	0.75	1	**3**	11.5	**16.8**	8.9	**21**	7
FG4-40/200A	1.1	1.5	**3**	13.8	**18.6**	10.9	**21**	10
FG4-40/250C	1.1	1.5	**3**	15.5	**19.2**	12.4	**24**	10
FG4-40/250B	1.5	2	**3**	17.5	**19.8**	14.2	**24**	12
FG4-40/250A	2.2	3	**3**	22	**22.8**	17.5	**24**	17
FG4-50/125C	0.37	0.5	**9**	4	**24.5**	3.3	**36**	1.5
FG4-50/125B	0.55	0.75	**9**	5	**25.2**	4.0	**36**	2
FG4-50/125A	0.55	0.75	**9**	6	**27**	4.8	**36**	3
FG4-50/160C	0.55	0.75	**9**	7	**25**	5	**30**	4
FG4-50/160B	0.75	1	**9**	8	**26.4**	6.5	**39**	3.8
FG4-50/160A	1.1	1.5	**9**	9.3	**27.6**	7.8	**42**	4.5
FG4-50/200C	1.5	2	**12**	11	**39.6**	9.3	**51**	7.5
FG4-50/200B	2.2	3	**12**	13	**43.2**	10.9	**51**	9.5
FG4-50/200A	2.2	3	**12**	15	**46.2**	12.8	**54**	11.2
FG4-50/200AR	3	4	**12**	17	**48**	14.5	**54**	13.2
FG4-50/250D	1.1	1.5	**9**	12.5	**25.5**	10.1	**39**	5
FG4-50/250C	1.5	2	**9**	14	**27**	11.2	**42**	5
FG4-50/250B	2.2	3	**9**	18	**30.6**	14.6	**42**	10.5
FG4-50/250A	2.2	3	**9**	20	**33**	16.3	**42**	13
FG4-50/250AR	3	4	**9**	23.5	**34.2**	19.9	**42**	17

TYPE	MOTOR TO BE COUPLED		PERFORMANCE n= 1450 min^{-1}					
	kW	HP	Q m³/h	H m	Q m³/h	H m	Q m³/h	H m
FG4-65/125C	0.55	0.75	**18**	4	**48**	3.2	**5.4**	2.5
FG4-65/125B	0.75	1	**18**	4.7	**54**	3.8	**66**	3
FG4-65/125A	1.1	1.5	**18**	5.7	**60**	4.7	**72**	4
FG4-65/160C	1.1	1.5	**18**	8	**54.6**	6.7	**66**	5.5
FG4-65/160B	1.5	2	**18**	9.1	**57**	7.6	**72**	5.7
FG4-65/160A	2.2	3	**18**	10.1	**59.4**	8.5	**72**	7
FG4-65/200B	2.2	3	**6**	10.7	**64.5**	8.5	**72**	7.3
FG4-65/200A	2.2	3	**18**	12	**66**	9.6	**75**	8.5
FG4-65/200AR	3	4	**18**	14	**68.4**	11.2	**78**	10
FG4-65/250C	3	4	**12**	19	**55.5**	16.2	**70.5**	13
FG4-65/250B	4	5.5	**12**	21.8	**58.8**	18.8	**75**	15.5
FG4-65/250A	5.5	7.5	**12**	23.5	**60**	20.6	**78**	17
FG4-80/160D	1.5	2	**18**	6.3	**84**	4.8	**120**	2.5
FG4-80/160C	2.2	3	**18**	7.5	**88.8**	5.7	**120**	3.8
FG4-80/160B	2.2	3	**18**	8.8	**94.8**	6.8	**120**	5
FG4-80/160A	3	4	**18**	10	**99.6**	7.7	**120**	6.2
FG4-80/200B	4	5.5	**18**	14	**92.4**	10.9	**108**	9
FG4-80/200A	5.5	7.5	**18**	15.5	**97.5**	12.6	**114**	10.5
FG4-80/250B	5.5	7.5	**18**	19.5	**90**	16.1	**108**	13.5
FG4-80/250A	7.5	10	**18**	22	**84**	19.9	**117**	15
FG4-100/160C	2.2	3	**24**	7.5	**110**	5	**144**	3
FG4-100/160B	2.2	3	**24**	8.3	**117**	5.7	**156**	3.5
FG4-100/160A	3	4	**24**	10	**124**	6.9	**168**	4.7
FG4-100/200C	4	5.5	**24**	12.7	**111**	9.6	**138**	7
FG4-100/200B	5.5	7.5	**24**	14.2	**117**	10.9	**144**	8.5
FG4-100/200A	5.5	7.5	**24**	15.8	**123**	12.6	**156**	9.5
FG4-100/250B	7.5	10	**24**	18.5	**117**	15.9	**156**	11.5
FG4-100/250A	9.2	12.5	**24**	22	**126**	19.3	**174**	13.5

Q = Flow Rate

H = Total manometric head

Performance curves comply with EN ISO 9906 Grade 3B tolerance limits.

DIMENSIONS AND WEIGHT

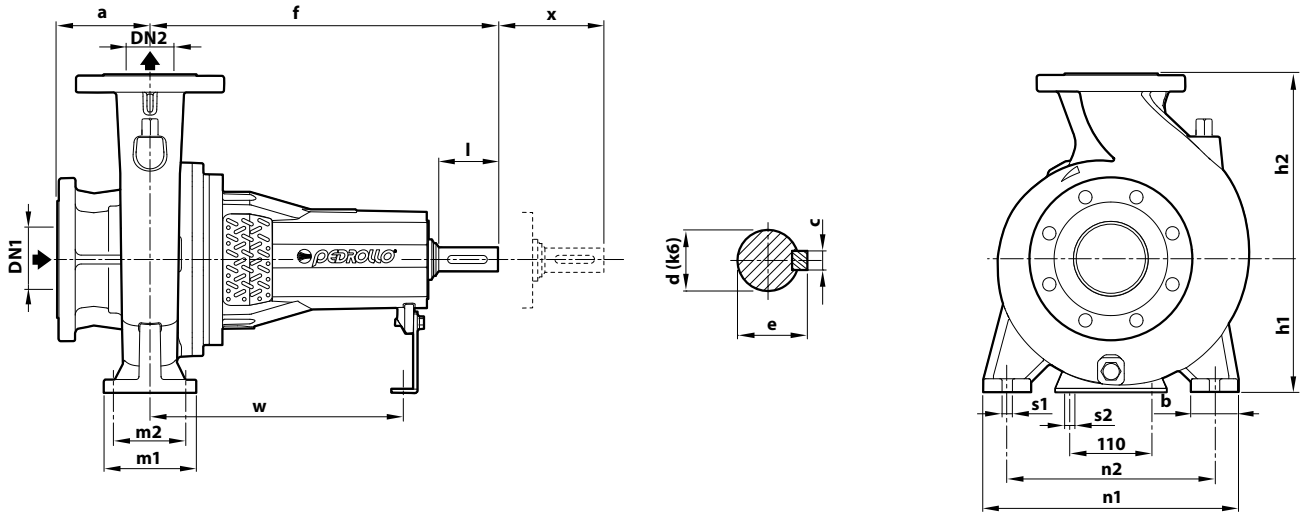

TYPE	PORTS		DIMENSIONS mm																	kg
	DN1	DN2	a	f	h1	h2	b	m1	m2	n1	n2	s1	s2	w	x	l	d (k6)	c	e	
FG 32/160					132	160	55	96												33.0
FG 32/200	**50**	**32**	80		160	180	55	95	71	240	190									38.1
FG 32/200H					160	180	55													36.9
FG 32/250			100		180	225	65	125	95	320	250									53.0
FG 40/125			80		112	140	50			210	160									30.4
FG 40/160	**65**	**40**			132	160		100	70	240	190									34.1
FG 40/200					160	180	55			265	212									40.2
FG 40/250				360	180	225	65	125	95	320	250	14		260	100	50	24	8	27	59.2
FG 50/125					132	160	50			240	190									33.0
FG 50/160	**65**	**50**			160	180	55	100	70	265	212									38.3
FG 50/200			100		160	200	50													50.3
FG 50/250					180	225	65			320	250		14							57.0
FG 65/125					160	180	65	125	95	280	212									45.2
FG 65/160	**80**	**65**			160	200	65													48.0
FG 65/200					180	225	65			320	250									55.1
FG 65/250				470	200	250	80	160	120	360	280	18		340		80	32	10	35	82.4
FG 80/160				360	180	225	65	125	95	320	250	14		260		50	24	8	27	53.0
FG 80/200	**100**	**80**		470	180	250	65			345	280			340	140	80	32	10	35	72.0
FG 80/250			125		200	280	80	160	120	400	315	18								91.1
FG 100/160				360	200	280	80			360	280			260		50	24	8	27	76.3
FG 100/200	**125**	**100**		470	200	280	80							340		80	32	10	35	82.1
FG 100/250			140		225	280	80			400	315									96.0

PORT FLANGES

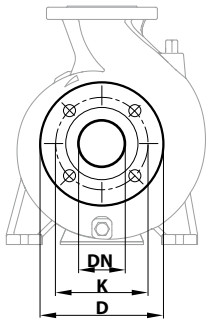

DN FLANGE	D	K	HOLES	
mm	mm	mm	N°	Ø (mm)
32	140	100	4	18
40	150	110		
50	165	125		
65	185	145		
80	200	160	8	
100	220	180		
125	250	210		

COUNTER-FLANGE

(CAN BE ORDERED SEPARATELY)

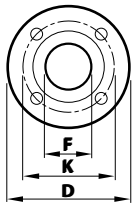

DN FLANGE	F	D	K	HOLES	
mm	COUNTER-FLANGE	mm	mm	N°	Ø (mm)
32	1¼"	140	100	4	18
40	1½"	150	110		
50	2"	165	125		
65	2½"	185	145		
80	3"	200	160	8	
100	4"	220	180		
125	5"	250	210		

FLUID SOLAR 4" Solar submersible pumps

Clean water
Domestic use
Agricultural use

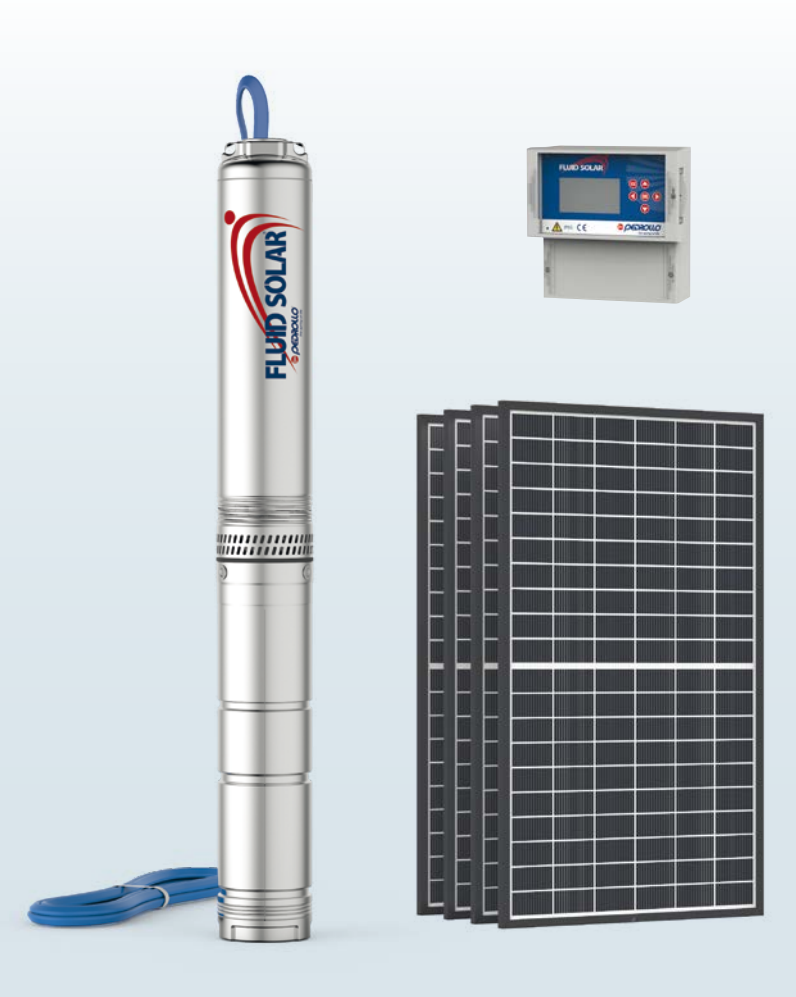

INSTALLATION AND USE

FLUID SOLAR pumps are engineered to draw clean water from wells using power from photovoltaic modules.

They feature a high-efficiency motor with integrated electronic control that adjusts the motor's speed based on the solar energy available.

This ensures optimal performance: high speed and efficiency in sunny conditions, and lower speed with reduced efficiency on cloudy days.

These pumps utilize a high-efficiency, oil-bathed, permanent magnet motor for enhanced performance and durability.

APPLICATION LIMITS

- Liquid temperature up to **+35 °C**
- Maximum sand content **200 g/m³**
- Capable of operating at depths of up to **100 metres** below water level

PATENTS - TRADEMARKS - DESIGNS

- Patent No. 0001413386, EP2419642
- Patent No. EP2300717
- Patent No. 102021000030575
- FLUID SOLAR® Registered trademark No. 001516301

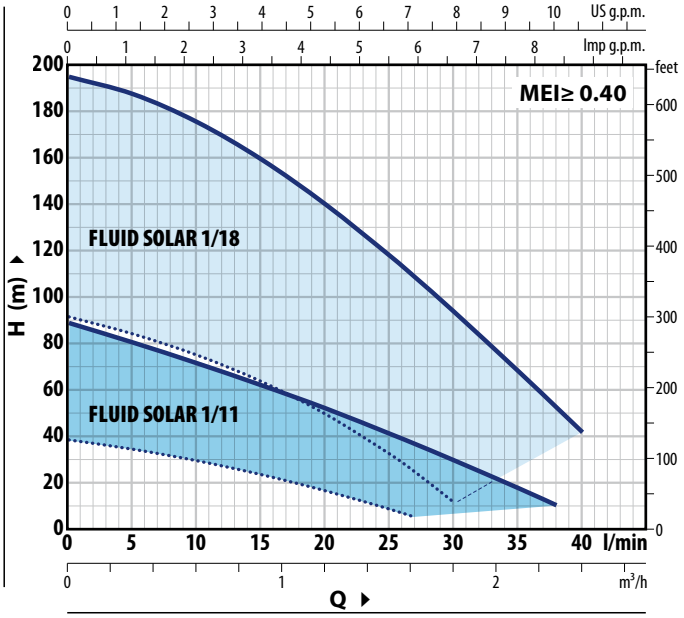

FLUID SOLAR 1/11

POWER CONSUMPTION P1 **750 W**

Q	m³/h	0	0.3	0.6	0.9	1.2	1.5	1.6	1.8	2.1	2.3
	l/min	**0**	**5**	**10**	**15**	**20**	**25**	**27**	**30**	**35**	**38**
H metres	▬	89	80.5	71.5	62	52	41	36.5	29.5	17.5	10
	••••	38	34	29.1	23.2	16.3	8.5	5			

Performance with photovoltaic modules for a total rated power of 980 Wp

FLUID SOLAR 1/18

POWER CONSUMPTION P1 **1500 W**

Q	m³/h	0	0.3	0.6	1.2	1.5	1.62	1.8	2.1	2.4
	l/min	**0**	**5**	**10**	**20**	**25**	**27**	**30**	**35**	**40**
H metres	▬	194.5	187	175	139.5	117.5	108	93.5	68	41.5
	••••	91.5	84	74.8	49.4	32.3	24.5	11.5		

Performance with photovoltaic modules for a total nominal power of 1960 Wp

▬ **Performance under 1000 W/m² Solar Irradiation and 100 VDC No-load Voltage from Photovoltaic Modules**

•••• **Performance under 300 W/m² Solar Irradiation and 70 VDC No-load Voltage from Photovoltaic Modules**

The performance curves shown above are based on photovoltaic modules positioned towards the SOUTH (or NORTH for installations in the Southern Hemisphere). The angle of inclination is adjusted according to the latitude of the installation site to optimize performance.

 ※ **Start of production 06.2024** ※

CURVES AND PERFORMANCE DATA

Performance curves comply with EN ISO 9906 Grade 3B tolerance limits.

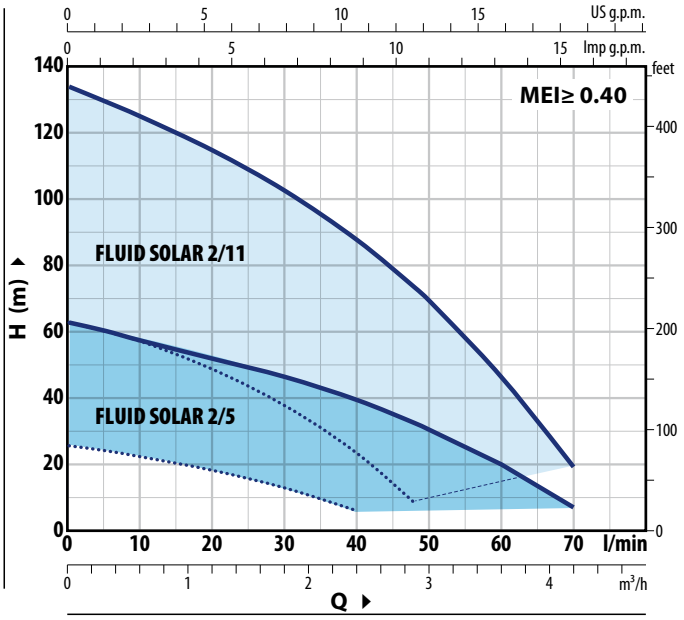

FLUID SOLAR 2/5

POWER CONSUMPTION P1 **750 W**

Q	m³/h	0	0.3	0.6	1.2	1.8	2.4	2.88	3	3.6	4.2
	l/min	**0**	**5**	**10**	**20**	**30**	**40**	**48**	**50**	**60**	**70**
H metres	▬	63	60.5	57.5	52	46.5	39.5	32.5	30.5	20	7
	••••	26	24.5	22.6	18.4	13	6				

Performance with photovoltaic modules for a total rated power of 980 Wp

FLUID SOLAR 2/11

POWER CONSUMPTION P1 **1500 W**

Q	m³/h	0	0.3	0.6	1.2	1.8	2.4	2.88	3	3.6	4.2
	l/min	**0**	**5**	**10**	**20**	**30**	**40**	**48**	**50**	**60**	**70**
H metres	▬	134	129.5	125	115	102.5	88	73.5	69.5	47	19.5
	••••	63	60.5	57.4	49.3	38.1	23.2	8			

Performance with photovoltaic modules for a total nominal power of 1960 Wp

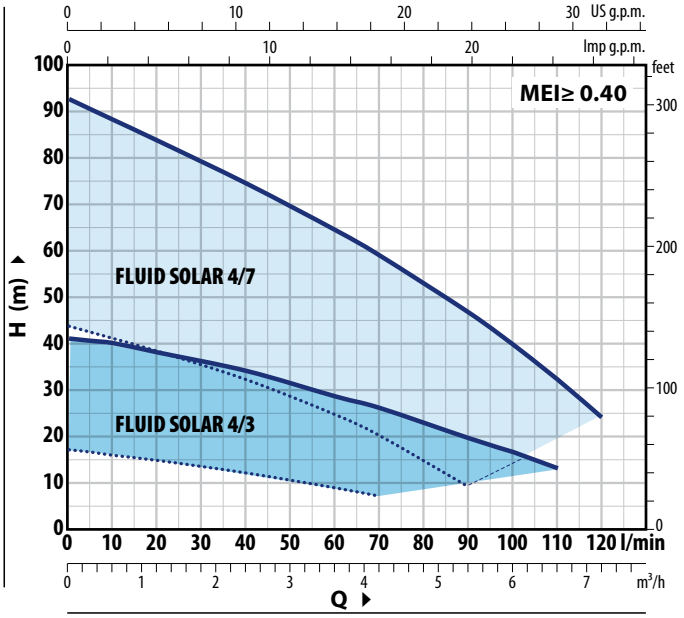

FLUID SOLAR 4/3

POWER CONSUMPTION P1 **750 W**

Q	m³/h	0	0.3	0.6	1.2	2.4	3.6	4.2	5.4	6	6.6
	l/min	**0**	**5**	**10**	**20**	**40**	**60**	**70**	**90**	**100**	**110**
H metres	▬	41	40.5	40	38	34	28.5	26	19.5	16.5	13
	••••	17	16.5	15.8	14.7	12	8.8	7			

Performance with photovoltaic modules for a total rated power of 980 Wp

FLUID SOLAR 4/7

POWER CONSUMPTION P1 **1500 W**

Q	m³/h	0	0.3	0.6	1.2	2.4	3.6	4.2	5.4	6	6.6	7.2
	l/min	**0**	**5**	**10**	**20**	**40**	**60**	**70**	**90**	**100**	**110**	**120**
H metres	▬	93	90.5	88.5	84	74.5	64.5	59	46.5	40	32	24
	••••	44	42.5	41.1	38.3	32.2	24.6	20.1	9			

Performance with photovoltaic modules for a total nominal power of 1960 Wp

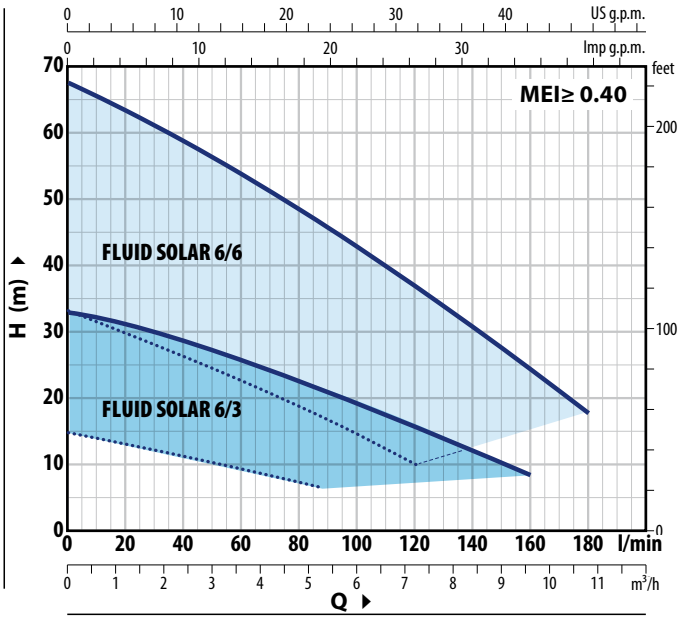

FLUID SOLAR 6/3

POWER CONSUMPTION P1 **750 W**

Q	m³/h	0	0.3	1.2	2.4	3.6	4.8	5.4	6	7.2	7.2	8.4	9.6
	l/min	**0**	**5**	**20**	**40**	**60**	**80**	**90**	**100**	**120**	**120**	**140**	**160**
H metres	▬	33	32.5	31.5	29	26	22.5	20.5	19	15	15	11.5	8.5
	••••	15	14.5	12.8	11	9.4	7.5	6.5					

Performance with photovoltaic modules for a total rated power of 980 Wp

FLUID SOLAR 6/6

POWER CONSUMPTION P1 **1500 W**

Q	m³/h	0	0.3	1.2	2.4	3.6	4.8	5.4	6	7.2	8.4	9.6	10.8
	l/min	**0**	**5**	**20**	**40**	**60**	**80**	**90**	**100**	**120**	**140**	**160**	**180**
H metres	▬	68	67	63.5	59	54	48.5	46	43	37	31	24.5	18
	••••	33.5	32.5	30	26.5	22.8	18.9	16.8	14.7	10			

Performance with photovoltaic modules for a total nominal power of 1960 Wp

FLUID SOLAR

STANDARD EQUIPMENT

P1 = 750 W

CONTROL PANEL

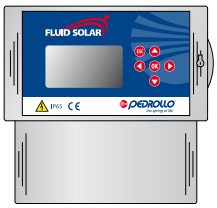

CONNECTORS

No. 1 male connector type **SMK**

No. 1 female connector type **SMK**

P1 = 1500 W

CONTROL PANEL

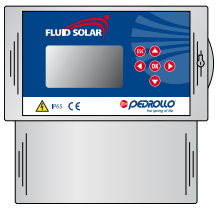

CONNECTORS

No. 1 male connector type **SMK**

No. 1 female connector type **SMK**

No. 1 Y-connector female/male type **MC4**

No. 1 male-female Y-connector type **MC4**

EXAMPLES OF INSTALLATION

FLUID SOLAR 1/11 - 2/5 - 4/3 - 6/3

※ To achieve maximum rated performance, the pump requires **photovoltaic modules** with a total rated power of **980 Wp** or higher.

※ The pump can run on lower-power photovoltaic modules than recommended, but with reduced performance.

※ Each module must have an open-circuit voltage between **35 - 55VDC**.

FLUID SOLAR 1/18 - 2/11 - 4/7 - 6/6

※ To achieve maximum rated performance, the pump requires photovoltaic modules with a total rated power of **1960 Wp** or higher.

※ The pump can run on lower-power photovoltaic modules than recommended, but with reduced performance.

※ Each module must have an open-circuit voltage between **35** and **55VDC**.

P1=750 W

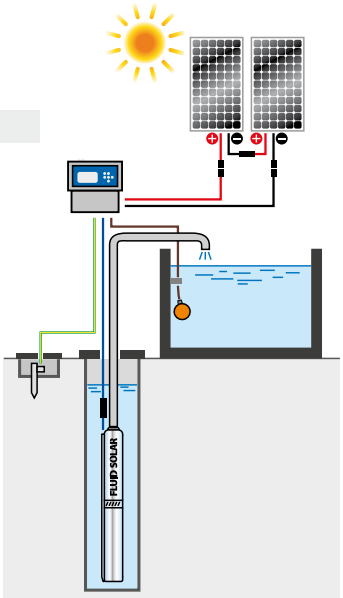

P1=1500 W

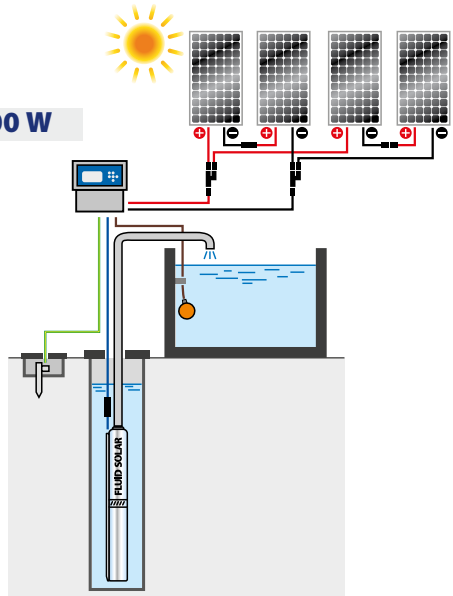

DIMENSIONS AND WEIGHT

P1 = 750 W

TYPE	PORT DN	DIMENSIONS mm Ø	h	kg *
FLUID SOLAR 1/11	**1¼"**	100	746	14.2
FLUID SOLAR 2/5			625	13.3
FLUID SOLAR 4/3			601	13.0
FLUID SOLAR 6/3			621	12.5

P1 = 1500 W

FLUID SOLAR 1/18	**1¼"**	100	956	18.5
FLUID SOLAR 2/11			816	17.7
FLUID SOLAR 4/7			771	16.8
FLUID SOLAR 6/6			785	16.6

(* weight of pump with control panel)

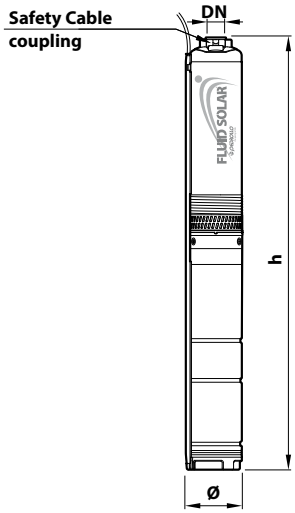

MATERIALS AND COMPONENTS

1	**Delivery port and pump jacket**	Stainless steel **AISI 304** with thread according to ISO 228/1
2	**Pump bearing**	EPDM
3	**Impellers**	Delrin®
4	**Diffusers**	Noryl™
5	**Stadium boxes**	Stainless steel **AISI 304**
6	**Pump shaft**	Stainless steel **AISI 304**
7	**Cable sheath**	Stainless steel **AISI 304**
8	**Filter**	Stainless steel **AISI 304**
9	**Coupling motor bracket**	Technopolymer and brass
10	**Motor shaft**	Stainless steel **AISI 431**
11	**Motor sleeve**	Stainless steel **AISI 304**

12 Mechanical seal

Seal	Shaft	Materials
ST4-16	Ø 16 mm	Ceramic / Graphite / NBR

13 Vectoral

14 Electric motor
- High-efficiency permanent magnet oil filled motor (non-toxic food-safe oil), rewindable.
- Continuous running duty S1
- Insulation: Class F
- Protection rating: IP X8

15 Compensating diaphragm

16 Power cord

Cable approved for use in drinking water by ACS, KTW, WRAS

※ Standard length 2.2 metres
※ Standard equipment: RPS2 cable splice kit

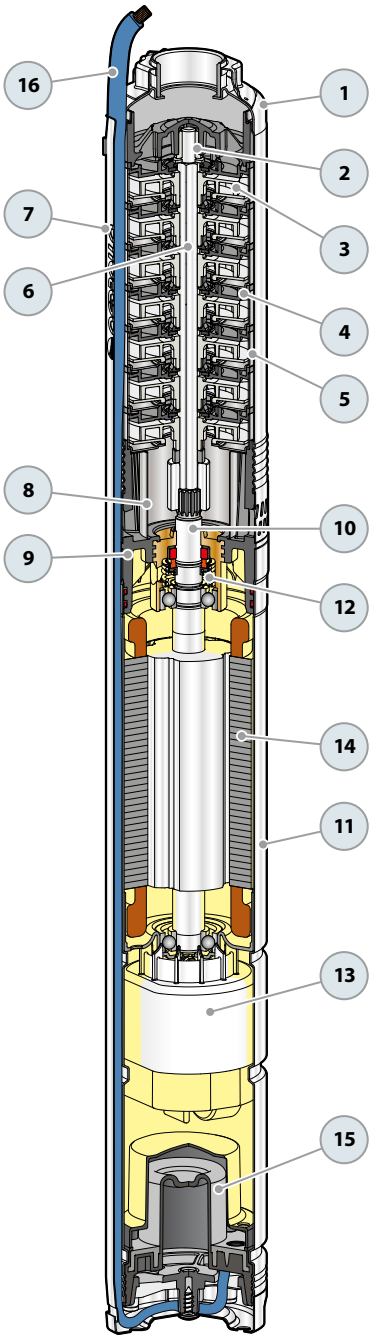

4-BLOCK 4" Close-coupled electric submersible pumps

Clean water
Civil use
Domestic use
Agricultural use

※ **Ready-to-install stainless steel submersible pump equipped with an integrated capacitor and thermal protector.**

※ **Patented hydraulics featuring fully independent, floating impellers, ensuring minimal impact from sand on pump performance.**

※ **These hydraulics have a minimum efficiency index (MEI) that far exceeds ErP requirements.**

※ **Outstanding performance .**

※ **Comes with a 20 m power cable.**

PERFORMANCE RANGE

- Flow rate up to **200 l/min** (12 m³/h)
- Head up to **140 m**

INSTALLATION AND USE

Designed to draw water from clean wells, even in the presence of sand (up to **200 g/m³**).

With their high efficiency, reliability, and ease of installation, they are highly recommended for domestic, commercial, and agricultural applications. They are ideal for automatic water distribution alongside pressure tanks, irrigation systems, and more.

APPLICATION LIMITS

- Liquid temperature up to **+35 °C**
- Maximum sand content **200 g/m³**
- Capable of operating at depths of up to **100 metres** below water level (with an appropriately sized power cable)
- Vertical and horizontal operation
- Starts per hour: **20** at regular intervals

AVAILABLE UPON REQUEST

※ **30 metres** long power cable
※ Different voltage requirements 60 Hz frequency

PERFORMANCE RANGE

50 Hz

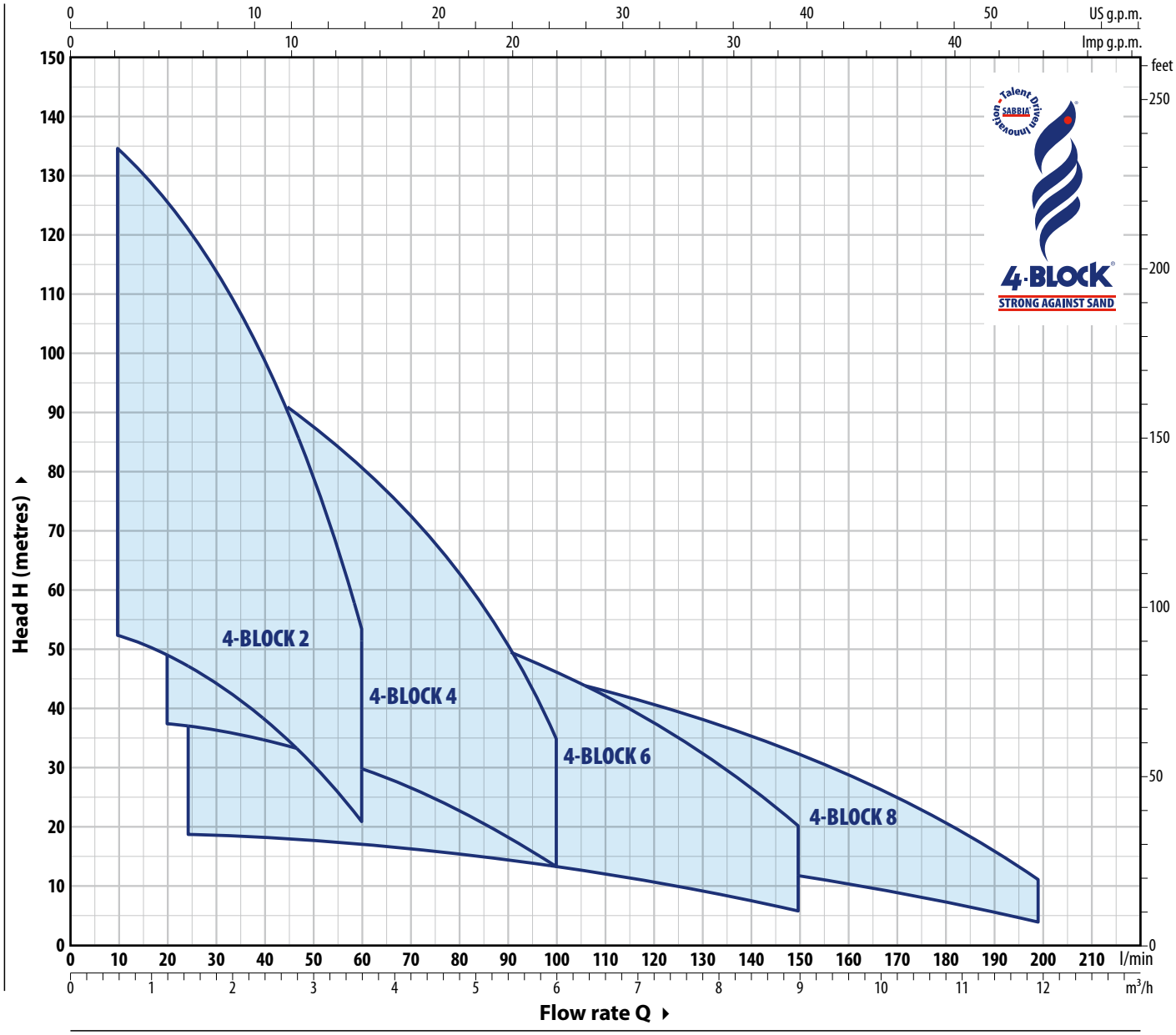

PATENTS - TRADE MARKS - MODELS

- European Patents No. EP3123031, EP2419642
- Patent No. 102021000030575
- **4-BLOCK®** is a registered trademark No. 018702380

PERFORMANCE RANGE

50 Hz

4-BLOCK 2

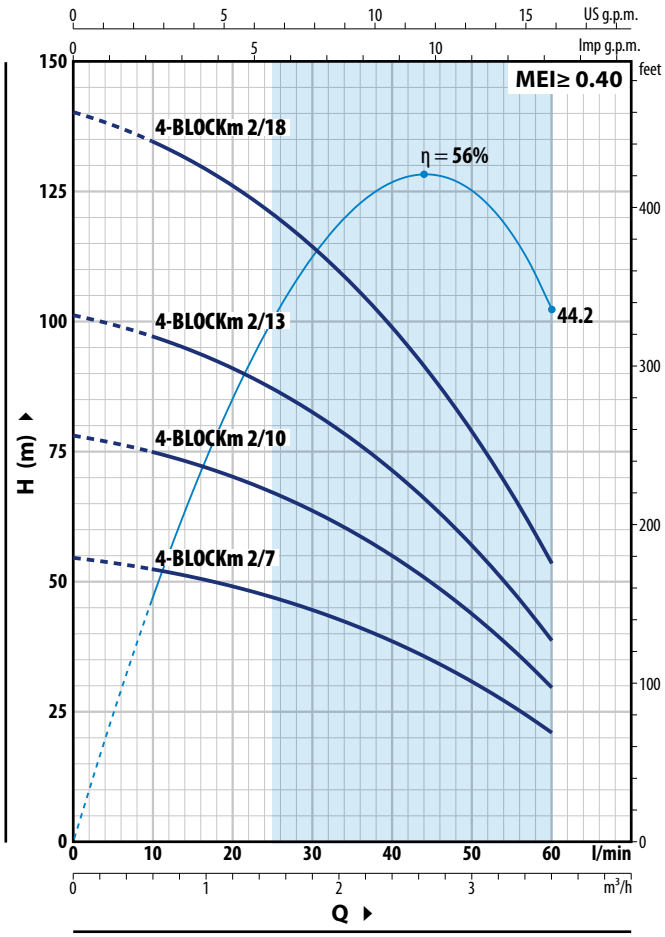

4-BLOCK 4

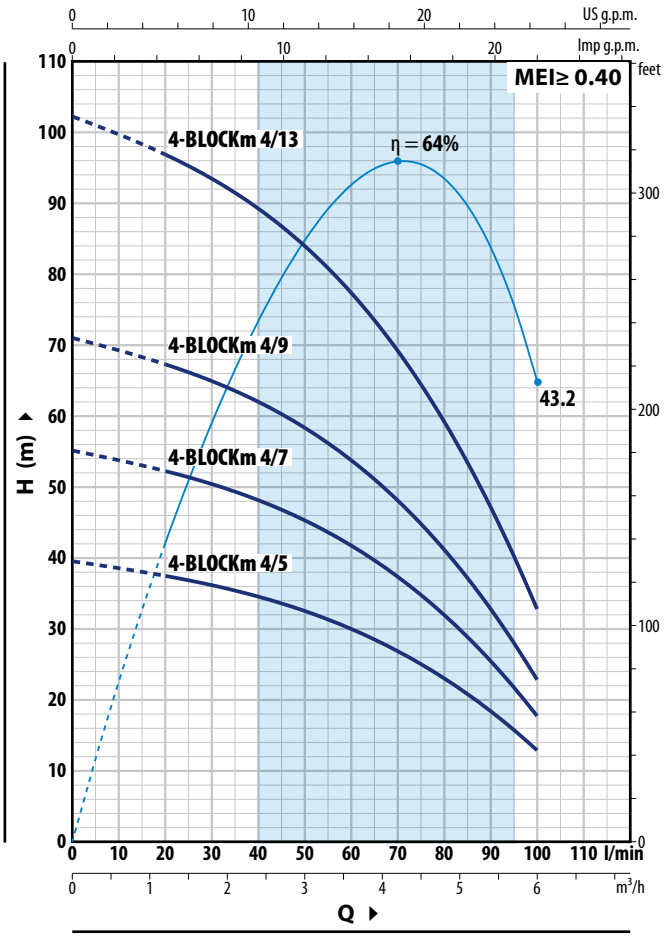

4-BLOCK 2

TYPE	POWER (P2)		Q m³/h	0	0.6	1.2	1.8	2.4	3	3.6
Single-phase	kW	HP	l/min	**0**	**10**	**20**	**30**	**40**	**50**	**60**
4-BLOCKm 2/7	0.37	0.50	H metres	54.5	52.5	49	44.5	38.5	30.5	21
4-BLOCKm 2/10	0.55	0.75		78	75	70	63.5	55	44	29.5
4-BLOCKm 2/13	0.75	1		101	97	91	83	71	57	38.5
4-BLOCKm 2/18	1.1	1.5		140	135	126	114	99	79	53.5

4-BLOCK 4

TYPE	POWER (P2)		Q m³/h	0	1.2	1.5	2.4	3.6	4.5	6
Single-phase	kW	HP	l/min	**0**	**20**	**25**	**40**	**60**	**75**	**100**
4-BLOCKm 4/5	0.37	0.50	H metres	39.5	37.5	36.5	34.5	30	24.8	12.5
4-BLOCKm 4/7	0.55	0.75		55	52	51.5	48	41.5	34.5	17.5
4-BLOCKm 4/9	0.75	1		71	67	66	62	53.5	44.5	22.5
4-BLOCKm 4/13	1.1	1.5		102	97	95	89	77	64.5	32.5

Q = Flow rate **H** = Total manometric head

Performance curves comply with EN ISO 9906 Grade 3B tolerance limits.

PERFORMANCE RANGE

50 Hz

4-BLOCK 6

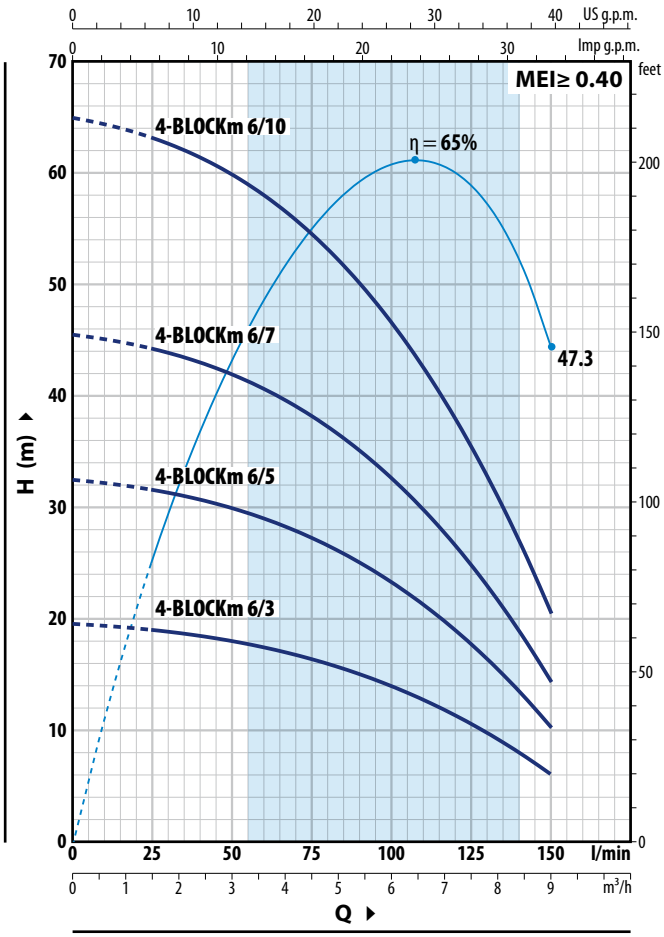

4-BLOCK 8

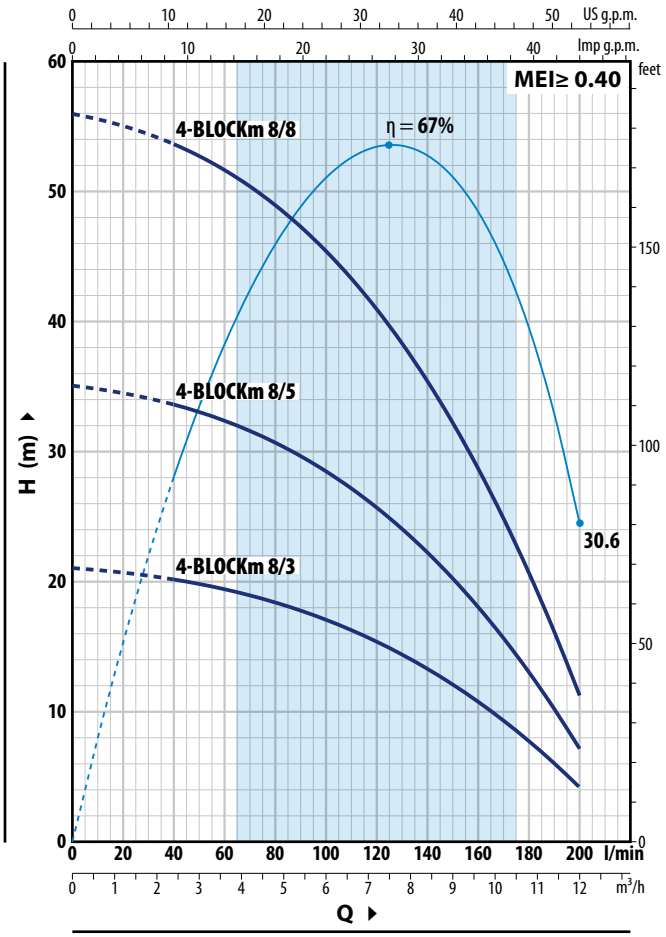

4-BLOCK 6

TYPE	POWER (P2)		Q m³/h	0	1.5	2.4	3.6	4.5	6.0	7.5	9.0
Single-phase	kW	HP	l/min	**0**	**25**	**40**	**60**	**75**	**100**	**125**	**150**
4-BLOCKm 6/3	0.37	0.50		19.5	19	18.4	17.4	16.4	14	10.6	6
4-BLOCKm 6/5	0.55	0.75		32.5	31.5	30.5	29	27.5	23.3	17.7	10
4-BLOCKm 6/7	0.75	1	**H** metres	45.5	44	43	40.5	38	32.5	24.8	14.5
4-BLOCKm 6/10	1.1	1.5		65	63	61.5	58	54.5	46.5	35.5	20.5

4-BLOCK 8

TYPE	POWER (P2)		Q m³/h	0	2.4	3.6	4.5	6.0	7.5	9.0	10.5	12
Single-phase	kW	HP	l/min	**0**	**40**	**60**	**75**	**100**	**125**	**150**	**175**	**200**
4-BLOCKm 8/3	0.55	0.75		21	20	19.4	18.7	17.1	14.9	12.1	8.6	4
4-BLOCKm 8/5	0.75	1	**H** metres	35	33.5	32.5	31	28.5	24.8	20.2	14.3	7
4-BLOCKm 8/8	1.1	1.5		56	53.5	51.5	50	45.5	39.5	32.5	22.9	11.5

Q = Flow rate **H** = Total manometric head

Performance curves comply with EN ISO 9906 Grade 3B tolerance limits.

MATERIALS AND COMPONENTS

1	**Delivery port and pump jacket**	Stainless steel **AISI 304** with thread according to ISO 228/1
2	**Pump bearing**	EPDM
3	**Impellers**	Delrin®
4	**Diffusers**	Noryl™
5	**Stadium boxes**	Stainless steel **AISI 304**
6	**Pump shaft**	Stainless steel **AISI 304**
7	**Cable sheath**	Stainless steel **AISI 304**
8	**Filter**	Stainless steel **AISI 304**
9	**Coupling motor bracket**	Technopolymer and brass
10	**Motor shaft**	Stainless steel **AISI 431**
11	**Motor sleeve**	Stainless steel **AISI 304**

12 Mechanical seal

Seal	Shaft	Materials
ST4-16	Ø 16 mm	Ceramic / Graphite / NBR

13 Capacitor

14 Electric motor

- Specially dimensioned submersible rewindable oil filled motor, suitable for continuous service (non-toxic food-safe oil).
- Single-phase 220-230 V - 50 Hz
- Built-in motor capacitor
- Thermal motor protection incorporated in the winding
- Continuous running duty S1
- Insulation: Class F
- Protection rating: IP X8

15 Compensating diaphragm

16 Power cord

➠ **DRINCABLE® HRC** certified for use with drinking water meant for human consumption by the **ACS** according to XP P 41-250, approval no. 18 MAT NY 156

Standard length **20 metres**

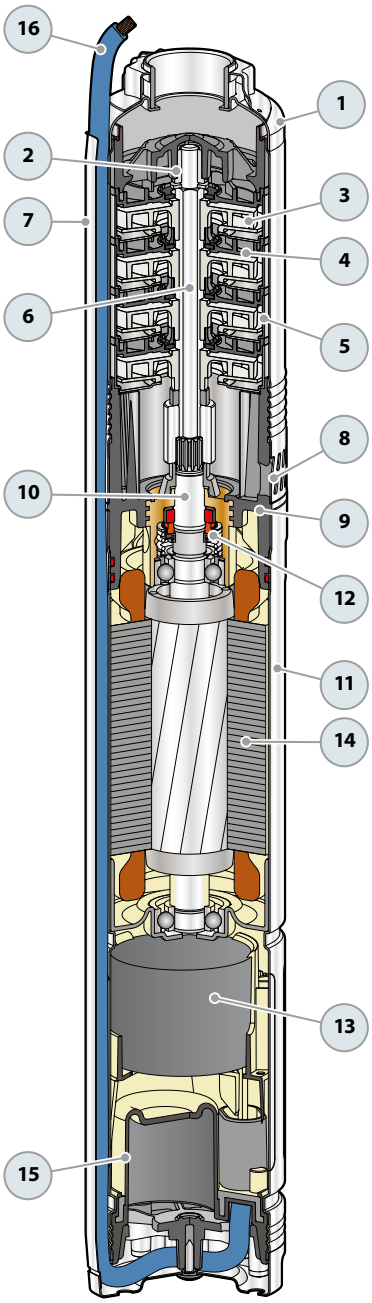

DIMENSIONS AND WEIGHT

TYPE	PORT	DIMENSIONS mm			kg
Single-phase	**DN**	NO. STAGES	Ø	h	1~
4-BLOCKm 2/7		**7**		**617**	**11.4**
4-BLOCKm 2/10		**10**		**677**	**12.3**
4-BLOCKm 2/13		**13**		**757**	**13.9**
4-BLOCKm 2/18		**18**		**907**	**17.0**
4-BLOCKm 4/5		**5**		**602**	**11.5**
4-BLOCKm 4/7		**7**		**652**	**12.1**
4-BLOCKm 4/9		**9**		**722**	**13.3**
4-BLOCKm 4/13	**1¼"**	**13**	**100**	**872**	**16.4**
4-BLOCKm 6/3		**3**		**572**	**11.4**
4-BLOCKm 6/5		**5**		**635**	**12.0**
4-BLOCKm 6/7		**7**		**718**	**13.2**
4-BLOCKm 6/10		**10**		**862**	**16.4**
4-BLOCKm 8/3		**3**		**572**	**12.0**
4-BLOCKm 8/5		**5**		**655**	**12.6**
4-BLOCKm 8/8		**8**		**799**	**15.8**

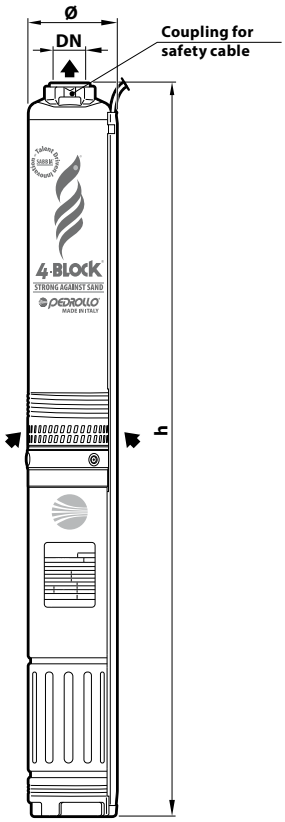

ABSORPTION

TYPE	VOLTAGE
Single-phase	**230 V**
4-BLOCKm – 0.37 kW	3.5 A
4-BLOCKm – 0.55 kW	4.4 A
4-BLOCKm – 0.75 kW	6.1 A
4-BLOCKm – 1.1 kW	8.0 A

Typical installation

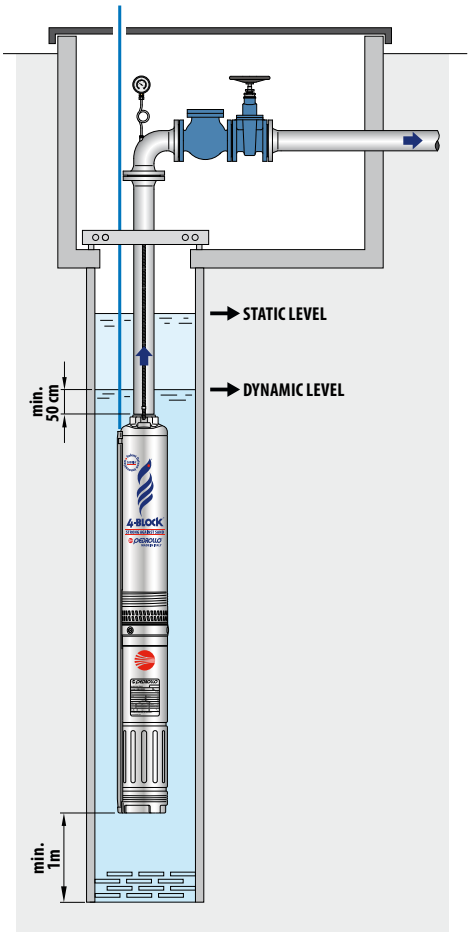

PALLET CAPACITY

TYPE	NO. OF PUMPS
Single-phase	
4-BLOCKm 2	55
4-BLOCKm 4	55
4-BLOCKm 6	55
4-BLOCKm 8	55

DAVIS 4" submersible pump with peripheral impeller

Clean water

Domestic use

Agricultural use

PERFORMANCE RANGE

- Flow rate up to **50 l/min** (3.0 m³/h)
- Head up to **75 m**

INSTALLATION AND USE

Ready-to-install cost-effective submersible pump, equipped with an integrated capacitor and thermal overload protector.

Designed to transfer clean water free from abrasive particles and liquids that will not damage the pump's components.

Compact and cost-effective, it is suitable for domestic applications. It works seamlessly with small-sized pressure tanks, offering an ideal setup for all irrigation requirements.

APPLICATION LIMITS

- Liquid temperature up to **+40 °C**
- Depth of use up to **40 m** below water level (with an appropriately sized power cable)
- Vertical and horizontal operation

AVAILABLE UPON REQUEST

※ **30 metres** long power cable

※ Different voltage requirements 60 Hz frequency

CURVES AND PERFORMANCE DATA – HS=0 m

50 Hz

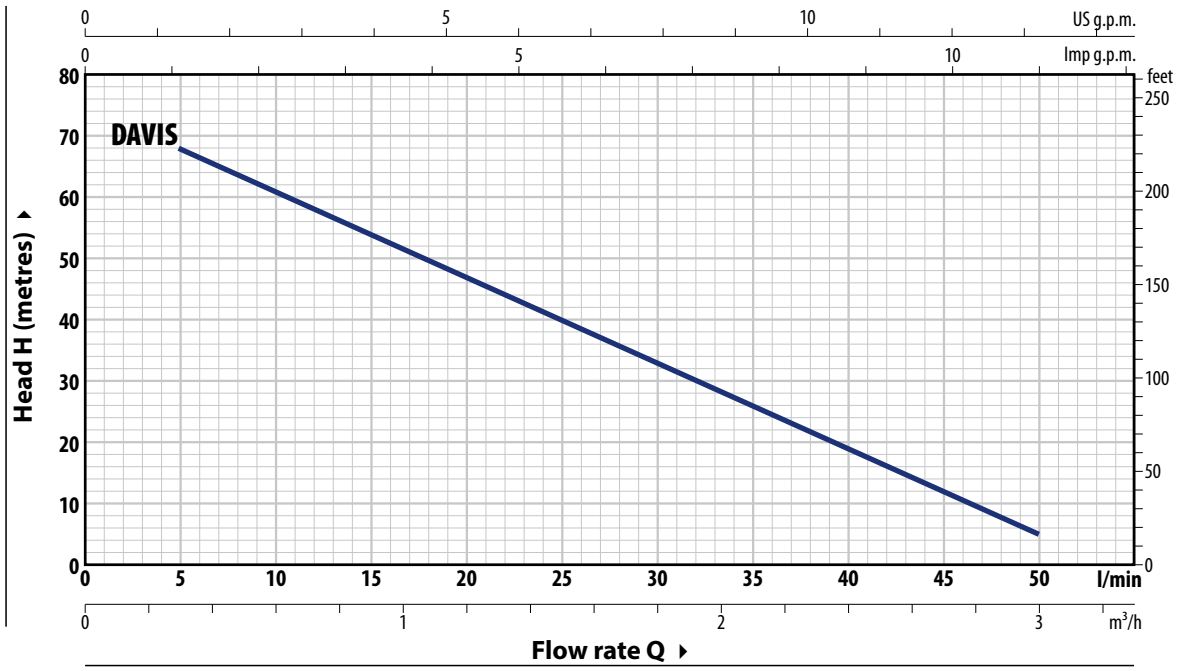

TYPE Single-phase	POWER (P2) kW	HP	Q											
				m³/h	0	0.3	0.6	0.9	1.2	1.5	1.8	2.1	2.4	2.7	3.0
				l/min	**0**	**5**	**10**	**15**	**20**	**25**	**30**	**35**	**40**	**45**	**50**
DAVIS®	0.75	1	**H**	metres	75	68	61	54	47	40	33	26	19	12	5

Q = Flow rate **H** = Total manometric head

Performance curves comply with EN ISO 9906 Grade 3B tolerance limits.

MATERIALS AND COMPONENTS

1	**Delivery port**	Stainless steel **AISI 304** complete with threaded delivery port in compliance with ISO 228/1
2	**Sealing cover**	Brass
3	**Impeller**	Brass, radial peripheral vane type
4	**Motor sleeve**	Stainless steel **AISI 304**
5	**Motor shaft**	Stainless steel **AISI 431**

6 Two mechanical seals separated by an oil chamber

Type	Shaft	Materials
AR-14 (Motor side)	Ø 14 mm	Ceramic / Graphite / NBR
ST1-14 SIC (Pump side)	Ø 14 mm	Ceramic / Silicon carbide / NBR

7 Capacitor

8 Electric motor

- Submersible PEDROLLO motor, suitable for continuous duty (with dry, rewindable stator).
- Single-phase 220-230 V - 50 Hz
- Built-in motor capacitor
- Thermal motor protection incorporated in the winding
- Continuous running duty S1
- Insulation: Class F
- Protection rating: IP X8

9 ※ Power cord

➠ **DRINCABLE® HRC** certified for use with drinking water meant for human consumption by the **ACS** according to XP P 41-250, approval no. 18 MAT NY 156

Standard length 20 metres

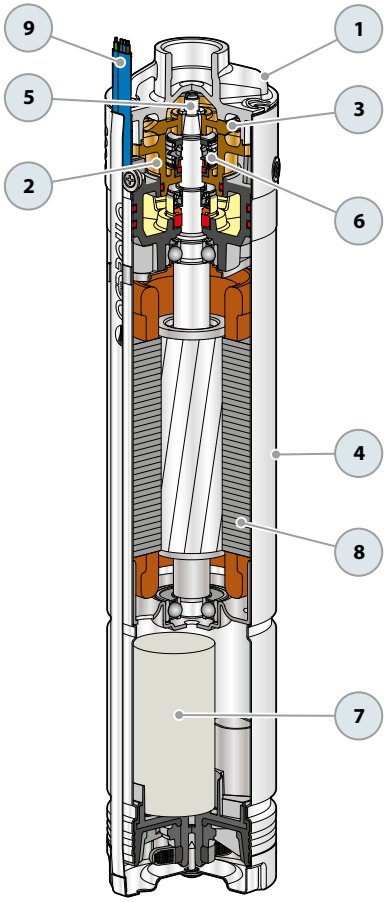

ABSORPTION

TYPE **Single-phase**	VOLTAGE **230 V**
DAVIS®	5.7 A

DIMENSIONS AND WEIGHT

TYPE **Single-phase**	PORT **DN**	DIMENSIONS mm Ø	h	kg
DAVIS®	**1"**	101	470	12.6

PALLET CAPACITY

TYPE **Single-phase**	NO. OF PUMPS
DAVIS®	60

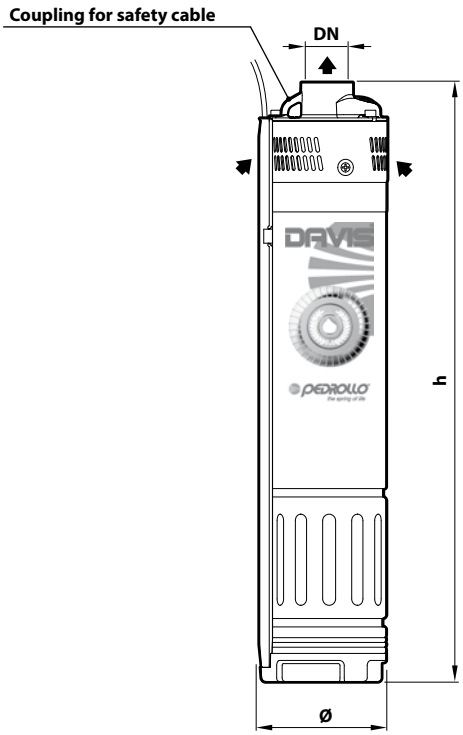

3SR 3" submersible pumps

Clean water

Domestic use

Civil use

PERFORMANCE RANGE

- Flow rate up to **120 l/min** (7.2 m³/h)
- Head up to **267 m**

INSTALLATION AND USE

3-inch submersible pumps are designed to transfer clean water, making them perfect for household use, irrigation, and small community water systems.

KEY FEATURES

The increased efficiency of 3SR pumps not only saves electricity but also offers economic advantages. Their small size and light build allow for easy installation in wells 3 inches wide or more.
With a blend of hydraulic parts and a high-efficiency motor, 3SR pumps excel in the 3-inch category, capable of handling water with up to **150 g/m³** of sand.

ELECTRIC MOTOR

- **Rewindable** motor in oil bath (non-toxic food-safe oil) 2-pole, 50 Hz
- Voltage:
  - single-phase 230 V
  - three-phase 400 V
- Continuous running duty **S1**
- Insulation: Class F
- Protection rating: IP 68
- Shaft and sleeve: **AISI 304** stainless steel
- Flange coupling dimensions to NEMA standard
- Connector with power cable from:
  - **1.5 m** for power up to 0.75 kW
  - **2.0 m** for power ratings from 1.1 kW

APPLICATION LIMITS

- Liquid temperature up to **+35 °C**
- Maximum sand content **150 g/m³**
- Capable of operating at depths of up to **100 metres** below water level (with an appropriately sized power cable)
- Vertical operation
- Starts per hour: **20** at regular intervals
- Minimum motor cooling flow **8 cm/s**

AVAILABLE UPON REQUEST

※ **10, 20, 30 or 40 metres** long power cable
※ Different voltage requirements 60 Hz frequency

PERFORMANCE RANGE

50 Hz

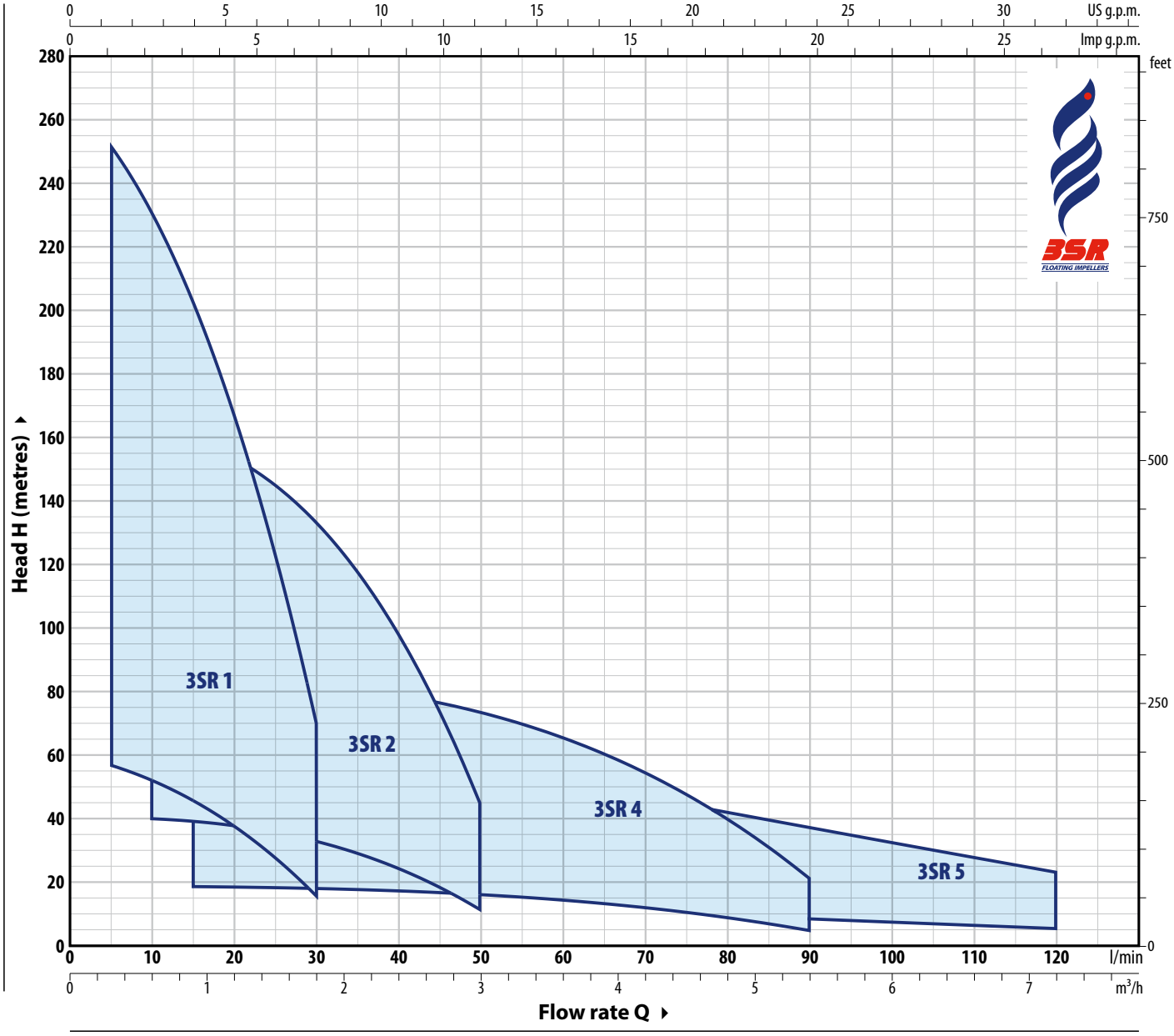

PATENTS:

- Patent No. EP3123031, EP2419642

CURVES AND PERFORMANCE DATA

50 Hz

3SR 1

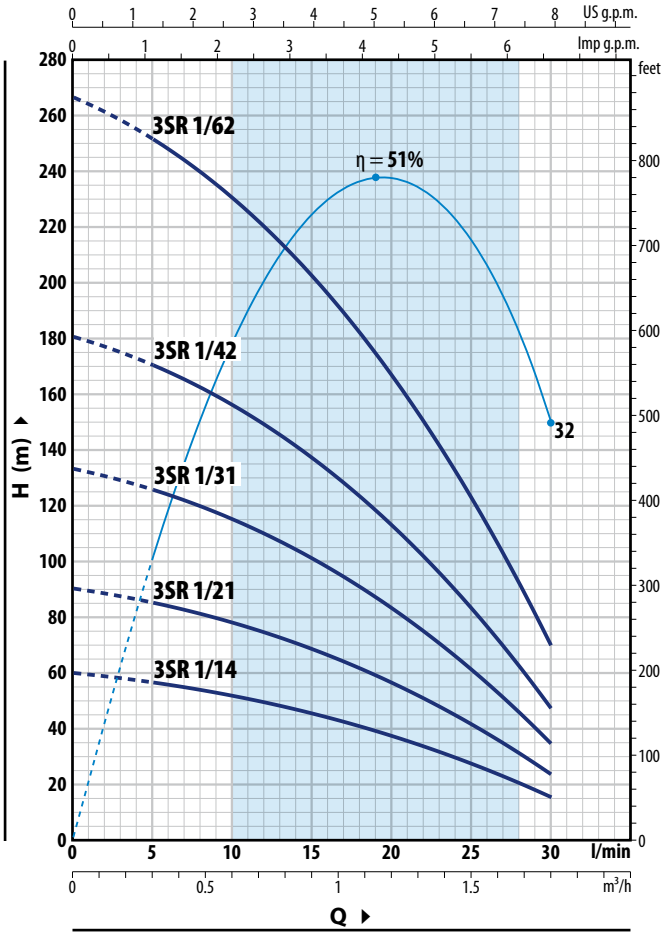

3SR 2

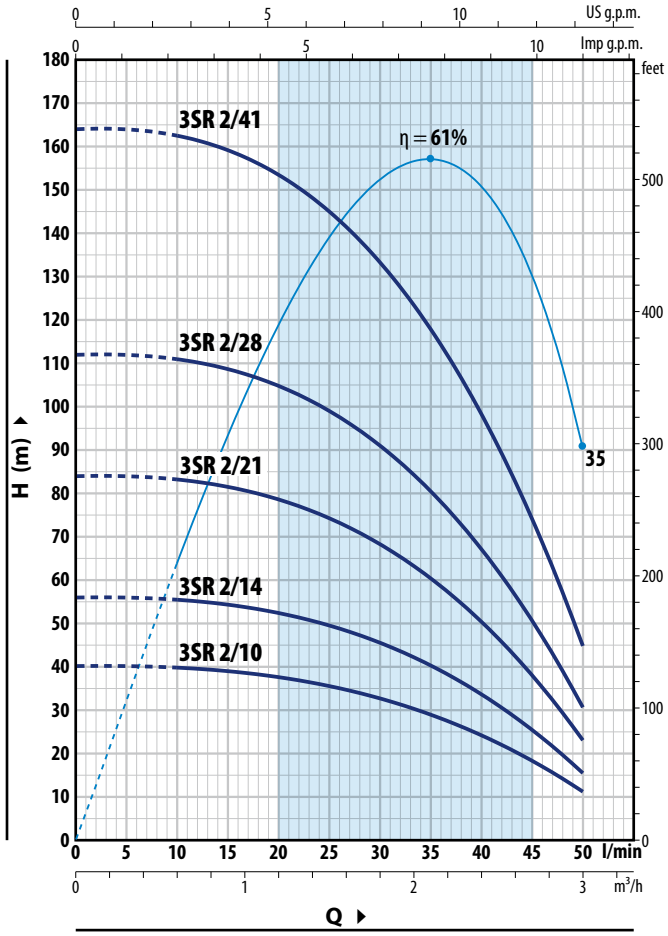

3SR 1

TYPE		POWER (P2)		Q m³/h	0	0.3	0.6	0.9	1.2	1.5	1.8
Single-phase	**Three-phase**	**kW**	**HP**	Q l/min	**0**	**5**	**10**	**15**	**20**	**25**	**30**
3SRm 1/14	**3SR 1/14**	0.25	0.33		60	57	52	45.5	37.5	28	16
3SRm 1/21	**3SR 1/21**	0.37	0.50		90	85	78	68.5	56.5	41.5	24
3SRm 1/31	**3SR 1/31**	0.55	0.75	**H** metres	133	126	115	101	83	61.5	35
3SRm 1/42	**3SR 1/42**	0.75	1		181	170	156	137	113	83	47.5
3SRm 1/62	**3SR 1/62**	1.1	1.5		267	252	230	203	167	123	70

3SR 2

TYPE		POWER (P2)		Q m³/h	0	0.6	0.9	1.2	1.5	1.8	2.1	2.4	3
Single-phase	**Three-phase**	**kW**	**HP**	Q l/min	**0**	**10**	**15**	**20**	**25**	**30**	**35**	**40**	**50**
3SRm 2/10	**3SR 2/10**	0.25	0.33		40	39.5	39	37.5	35.5	32.5	28.5	24	11
3SRm 2/14	**3SR 2/14**	0.37	0.50		56	55.5	54.5	52.5	49.5	45.5	40	33.5	15.5
3SRm 2/21	**3SR 2/21**	0.55	0.75	**H** metres	84	83	81	79	74	68	60.5	50.5	23
3SRm 2/28	**3SR 2/28**	0.75	1		112	111	109	105	99	91	80	67	30.5
3SRm 2/41	**3SR 2/41**	1.1	1.5		164	162	159	153	145	133	118	98	45

Q = Flow rate **H** = Total manometric head

Performance curves comply with EN ISO 9906 Grade 3B tolerance limits.

CURVES AND PERFORMANCE DATA

50 Hz

3SR 4

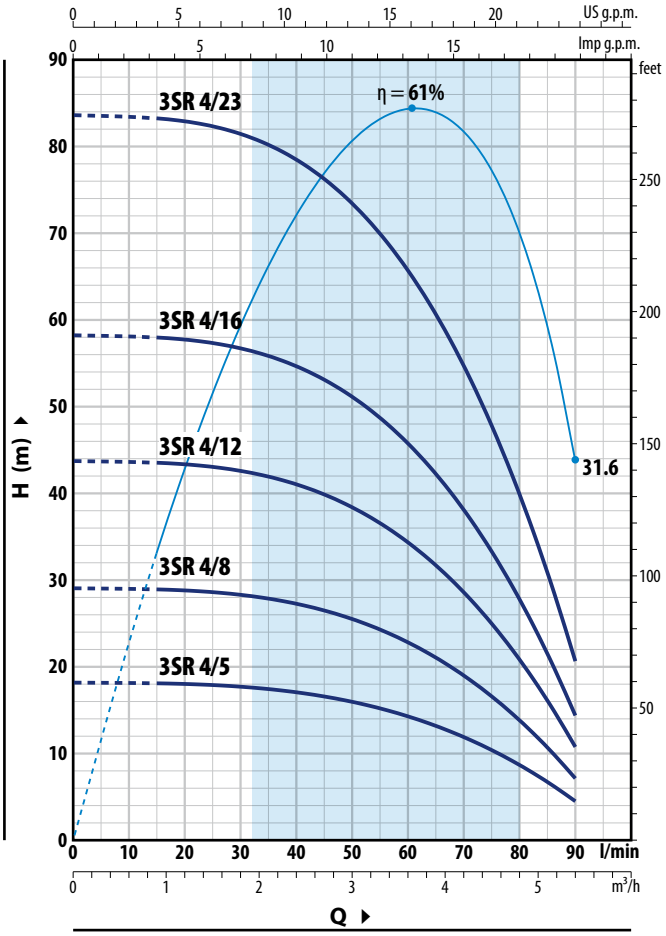

3SR 5

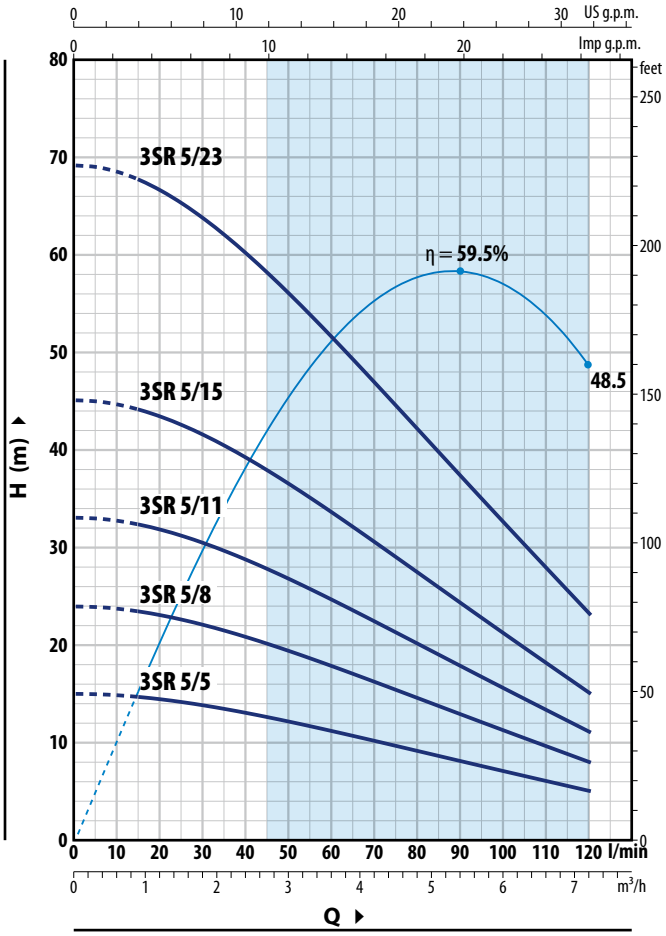

3SR 4

TYPE		POWER (P2)		Q m³/h	0	0.9	1.2	1.8	2.4	3	3.6	4.2	4.8	5.4
Single-phase	**Three-phase**	**kW**	**HP**	**Q l/min**	**0**	**15**	**20**	**30**	**40**	**50**	**60**	**70**	**80**	**90**
3SRm 4/5	**3SR 4/5**	0.25	0.33		18	18	18	17.8	17.1	16	14.3	12	8.7	4.5
3SRm 4/8	**3SR 4/8**	0.37	0.50		29	29	29	28.5	27.5	25.6	23	19	14	7
3SRm 4/12	**3SR 4/12**	0.55	0.75	**H** metres	43.5	43.5	43.5	42.5	41	38.5	34.5	28.5	21	11
3SRm 4/16	**3SR 4/16**	0.75	1		58.5	58	58	57	54.5	51	46	38	28	14.5
3SRm 4/23	**3SR 4/23**	1.1	1.5		84	83	83	82	79	74	66	55	40	20.5

※ 3SR5

TYPE		POWER (P2)		Q m³/h	0	0.9	1.8	2.4	3	3.6	4.2	4.8	6	7.2
Single-phase	**Three-phase**	**kW**	**HP**	**Q l/min**	**0**	**15**	**30**	**40**	**50**	**60**	**70**	**80**	**100**	**120**
3SRm 5/5	**3SR 5/5**	0.25	0.33		15	14.5	13.8	13	12.1	11.2	10.1	9.1	7	5
3SRm 5/8	**3SR 5/8**	0.37	0.5		24	23.5	22.1	20.8	19.4	17.8	16.2	14.6	11.3	8
3SRm 5/11	**3SR 5/11**	0.55	0.75	**H** metres	33	32.5	30.5	28.5	26.7	24.5	22.3	20	15.5	11
3SRm 5/15	**3SR 5/15**	0.75	1		45	44	41.5	39	36.5	33.5	30.5	27.5	21.1	15
3SRm 5/23	**3SR 5/23**	1.1	1.5		69	67.5	63.5	60	56	51.5	46.5	42	32.5	23

Q = Flow rate **H** = Total manometric head

Performance curves comply with EN ISO 9906 Grade 3B tolerance limits.

MATERIALS AND COMPONENTS

1	**Delivery port**	Micro-cast **AISI 304** stainless steel with thread according to ISO 228/1
2	**Check valve**	Stainless steel **AISI 304**
3	**Motor bracket**	**AISI 304** micro-cast stainless steel, sized to NEMA standards
4	**Impellers**	Delrin® for 3SR 1-2-4 Noryl™ for 3SR 5
5	**Diffusers**	Noryl™ - **AISI 304** stainless steel
6	**Diffuser cover**	Noryl™ - **AISI 304** stainless steel for 3SR 1-2-4 Noryl™ for 3SR 5
7	**Pump shaft**	Stainless steel **AISI 304**
8	**Pump bearings**	Made of **AISI 316L** stainless steel coated with chromium oxide, for greater durability even in the presence of sand.
9	**Tow coupling**	Stainless steel **AISI 316L**
10	**Filter**	Stainless steel **AISI 304**
11	**Cable sheath**	Stainless steel **AISI 304**
12	**Motor 3"**	Rewindable oil-submerged motor

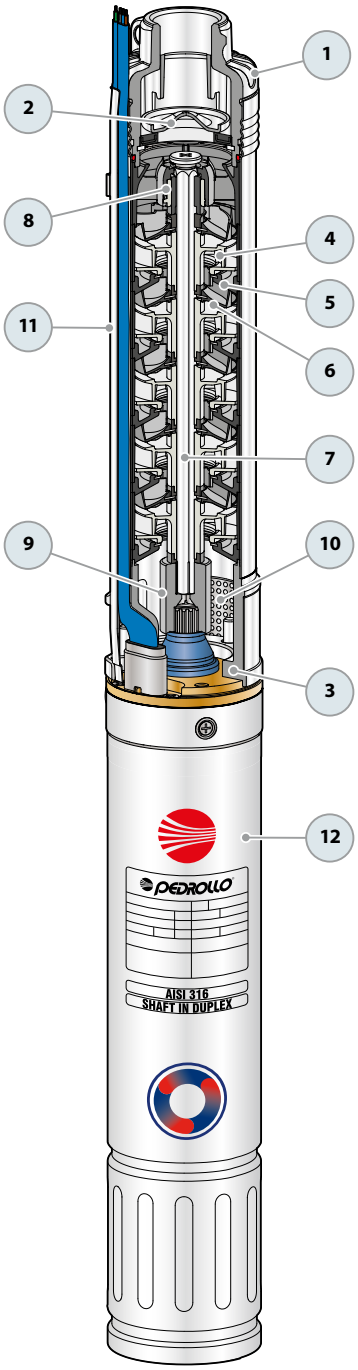

ABSORPTION

Single-phase versions - 230 V

TYPE	Power nominal P_2		Axial Load	Capacitor (VL=450V)	ABSORPTION
230 V / 50 Hz	kW	HP	N	µF	
3SRm 1/14	0.25	0.33	800	12.5	3.2 A
3SRm 1/21	0.37	0.50		12.5	3.4 A
3SRm 1/31	0.55	0.75		16	4.5 A
3SRm 1/42	0.75	1		20	6.0 A
3SRm 1/62	1.1	1.5		30	8.0 A
3SRm 2/10	0.25	0.33	800	12.5	3.2 A
3SRm 2/14	0.37	0.50		12.5	3.4 A
3SRm 2/21	0.55	0.75		16	4.5 A
3SRm 2/28	0.75	1		20	6.0 A
3SRm 2/41	1.1	1.5		30	8.0 A
3SRm 4/5	0.25	0.33	800	12.5	3.2 A
3SRm 4/8	0.37	0.50		12.5	3.4 A
3SRm 4/12	0.55	0.75		16	4.5 A
3SRm 4/16	0.75	1		20	6.0 A
3SRm 4/23	1.1	1.5		30	8.0 A
3SRm 5/5	0.25	0.33	800	12.5	3.2 A
3SRm 5/8	0.37	0.5		12.5	3.4 A
3SRm 5/11	0.55	0.75		16	4.5 A
3SRm 5/15	0.75	1		20	6.0 A
3SRm 5/23	1.1	1.5		30	8.0 A

Three-phase versions - 400 V

TYPE	Power nominal P_2		Axial Load	ABSORPTION
400 V / 50 Hz	kW	HP	N	
3SR 1/14	0.25	0.33	800	1.4 A
3SR 1/21	0.37	0.50		1.5 A
3SR 1/31	0.55	0.75		1.9 A
3SR 1/42	0.75	1		2.6 A
3SR 1/62	1.1	1.5		3.5 A
3SR 2/10	0.25	0.33	800	1.4 A
3SR 2/14	0.37	0.50		1.5 A
3SR 2/21	0.55	0.75		1.9 A
3SR 2/28	0.75	1		2.6 A
3SR 2/41	1.1	1.5		3.5 A
3SR 4/5	0.25	0.33	800	1.4 A
3SR 4/8	0.37	0.50		1.5 A
3SR 4/12	0.55	0.75		1.9 A
3SR 4/16	0.75	1		2.6 A
3SR 4/23	1.1	1.5		3.5 A
3SR 5/5	0.25	0.33	800	1.4 A
3SR 5/8	0.37	0.5		1.5 A
3SR 5/11	0.55	0.75		1.9 A
3SR 5/15	0.75	1		2.6 A
3SR 5/23	1.1	1.5		3.5 A

DIMENSIONS AND WEIGHT

TYPE	PORT	DIMENSIONS mm				kg
Single-ph.	**DN**	Ø	h1	h2	h3	1~
3SRm 1/14	**1″**	**76**	415	388	803	9.9
3SRm 1/21			547	388	935	10.4
3SRm 1/31			736	408	1144	12.0
3SRm 1/42			973	448	1421	14.2
3SRm 1/62			1380	488	1868	17.6
3SRm 2/10	**1″**	**76**	377	388	765	9.6
3SRm 2/14			467	388	855	9.9
3SRm 2/21			625	408	1033	11.2
3SRm 2/28			813	448	1261	13.1
3SRm 2/41			1136	488	1624	15.8
3SRm 4/5	**1″**	**76**	311	388	699	9.2
3SRm 4/8			407	388	795	9.4
3SRm 4/12			534	408	942	10.5
3SRm 4/16			662	448	1110	12.2
3SRm 4/23			915	488	1403	14.5
3SRm 5/5	**1″**	**76**	399	388	787	9.7
3SRm 5/8			550	388	938	10.5
3SRm 5/11			700	408	1108	11.9
3SRm 5/15			901	448	1349	14.1
3SRm 5/23			1303	488	1791	17.3

Three-ph.	**DN**	Ø	h1	h2	h3	3~
3SR 1/14	**1″**	**76**	415	368	783	9.0
3SR 1/21			547	368	915	9.5
3SR 1/31			736	388	1124	11.3
3SR 1/42			973	408	1381	13.3
3SR 1/62			1380	448	1828	16.7
3SR 2/10	**1″**	**76**	377	368	745	8.7
3SR 2/14			467	368	835	9.0
3SR 2/21			625	388	1013	10.6
3SR 2/28			813	408	1221	12.2
3SR 2/41			1136	448	1584	15.0
3SR 4/5	**1″**	**76**	311	368	679	8.3
3SR 4/8			407	368	775	8.5
3SR 4/12			534	388	922	9.8
3SR 4/16			662	408	1070	11.3
3SR 4/23			915	448	1363	13.6
3SR 5/5	**1″**	**76**	399	368	767	9.2
3SR 5/8			550	368	918	10.0
3SR 5/11			700	388	1088	11.4
3SR 5/15			901	408	1309	13.1
3SR 5/23			1303	448	1751	16.2

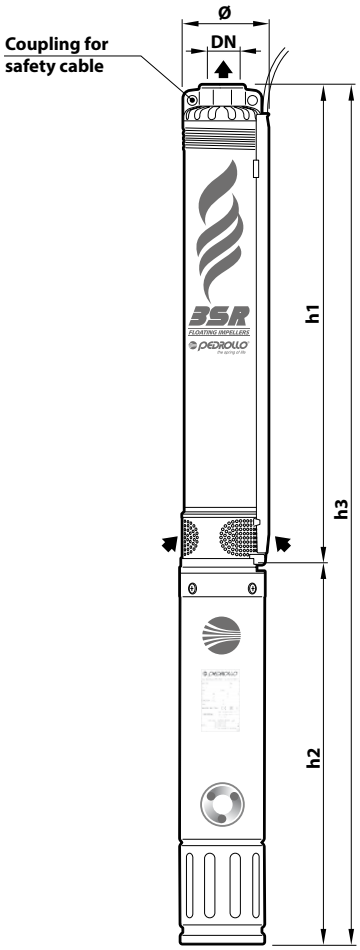

4SR 4" submersible pumps

Clean water

Domestic use

Civil use

Agricultural use

※ The new 4SR-S series floating impeller pumps, with their advanced hydraulic design and patented innovations, deliver outstanding performance and efficiency. They are exceptionally resistant to sand-related wear, offering a durability 10 times higher than other global market pumps!

※ The new 4SR-S pumps feature a patented inductor that improves priming capabilities in wells with air/water mix or water containing gasses.

PERFORMANCE RANGE

- Flow rate up to **350 l/min** (21 m³/h)
- Head up to **576 m**

INSTALLATION AND USE

They are recommended for pumping clean water. Due to their high efficiency and reliability, they are suitable for **domestic, civil and industrial** applications, for water distribution coupled with autoclaves, for irrigation, for washing systems, for pressure boosting, etc.

※ KEY FEATURES

Low energy consumption and remarkable durability, even in the presence of sand (up to **200 g/m³**), thanks to an innovative patented hydraulics system..

APPLICATION LIMITS

- Liquid temperature up to **+35 °C**
- Maximum sand content:
  - **200 g/m³** for 4SR-S
  - **150 g/m³** for 4SR-N
- Maximum operating depth below water level:
  - **200 m** with 4PD motors
  - **300 m** with 4PS motors
- Operation:
  - in vertical position
  - horizontally with the following limits:
    4SR-S - 1 / 1.5 / 2 / 4 up to **23 stages**
    4SR-S 6 / 8 up to **17 stages**
    4SR-N 10 / 12 / 15 up to **13 stages**
- Starts per hour: **20** at regular intervals
- Minimum motor cooling flow **8 cm/s**
- Continuous running duty **S1**

INCLUDES

ELECTRIC MOTOR

※ Three-phase 400 V - 50 Hz
※ Single-phase 230 V - 50 Hz
※ **Capacitor included in packaging**
※ Power cable:
- **2 m** for power ratings from 0.75 to 2.2 kW
- **3.6 m** for power ratings from 3 to 7.5 kW.

AVAILABLE UPON REQUEST

※ Different voltage requirements 60 Hz frequency
※ Cooling jacket kit

PATENTS:

- European Patent No. EP3123031
- European Patent No. EP2419642 for 4SR-S
- Patent No. 10202100003057 for 4SR-S
- **4SR-S®** is a registered trademark No. 018702382
- **SABBIA®** is registered trademark no. 5456231

CURVES AND PERFORMANCE DATA

50 Hz

4SR 1-S

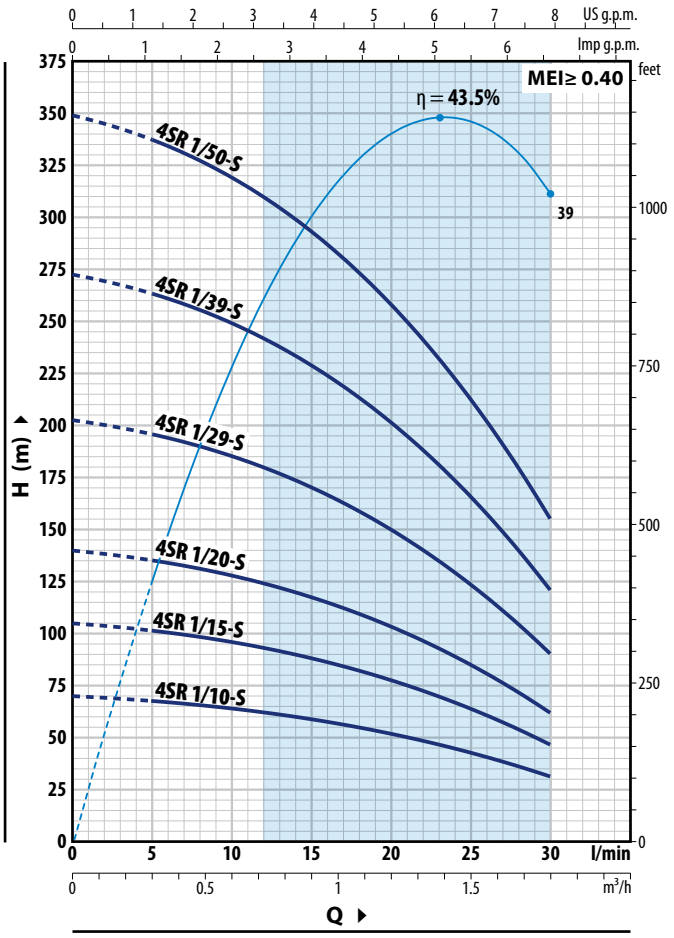

4SR 1.5-S

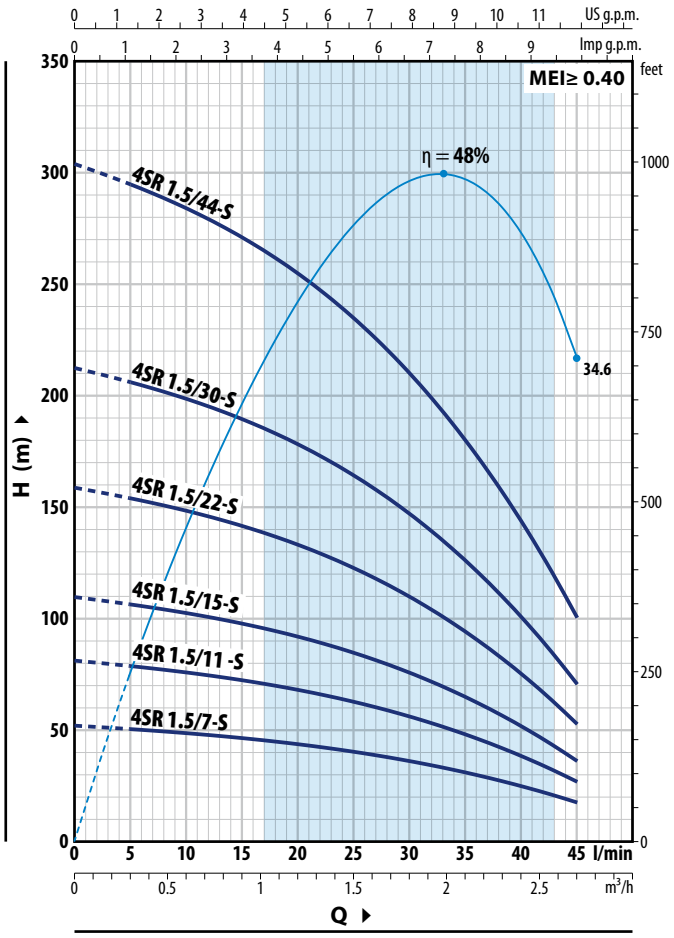

4SR 1-S

TYPE		POWER (P2)		Q m³/h	0	0.3	0.6	0.9	1.2	1.5	1.8
Single-phase	Three-phase	kW	HP	Q l/min	**0**	**5**	**10**	**15**	**20**	**25**	**30**
4SRm 1/10 - S	**4SR 1/10 - S**	0.37	0.50	H metres	70	67.5	64	58.5	51.5	42.5	31
4SRm 1/15 - S	**4SR 1/15 - S**	0.55	0.75		105	101	96	88	78	64	46.5
4SRm 1/20 - S	**4SR 1/20 - S**	0.75	1		140	135	128	117	103	85	62
4SRm 1/29 - S	**4SR 1/29 - S**	1.1	1.5		203	196	185	170	150	123	90
4SRm 1/39 - S	**4SR 1/39 - S**	1.5	2		273	264	249	229	202	166	121
4SRm 1/50 - S	**4SR 1/50 - S**	2.2	3		350	338	320	294	258	213	155

4SR 1.5-S

TYPE		POWER (P2)		Q m³/h	0	0.3	0.6	0.9	1.2	1.5	1.8	2.1	2.4	2.7
Single-phase	Three-phase	kW	HP	Q l/min	**0**	**5**	**10**	**15**	**20**	**25**	**30**	**35**	**40**	**45**
4SRm 1.5/7 - S	**4SR 1.5/7 - S**	0.37	0.50	H metres	51.5	50	48.5	46	43.5	40	36	30.5	24.5	17
4SRm 1.5/11 - S	**4SR 1.5/11 - S**	0.55	0.75		81	78	75	72	67.5	62.5	55.5	48	38	26.5
4SRm 1.5/15 - S	**4SR 1.5/15 - S**	0.75	1		109	106	102	97	92	84	76	64.5	51.5	36
4SRm 1.5/22 - S	**4SR 1.5/22 - S**	1.1	1.5		158	154	148	141	133	122	109	94	75	52.5
4SRm 1.5/30 - S	**4SR 1.5/30 - S**	1.5	2		213	206	199	190	178	164	147	126	100	70
4SRm 1.5/44 - S	**4SR 1.5/44 - S**	2.2	3		304	295	284	271	255	235	210	180	144	100

Q = Flow rate **H** = Total manometric head

Performance curves comply with EN ISO 9906 Grade 3B tolerance limits.

CURVES AND PERFORMANCE DATA

50 Hz

4SR 2-S

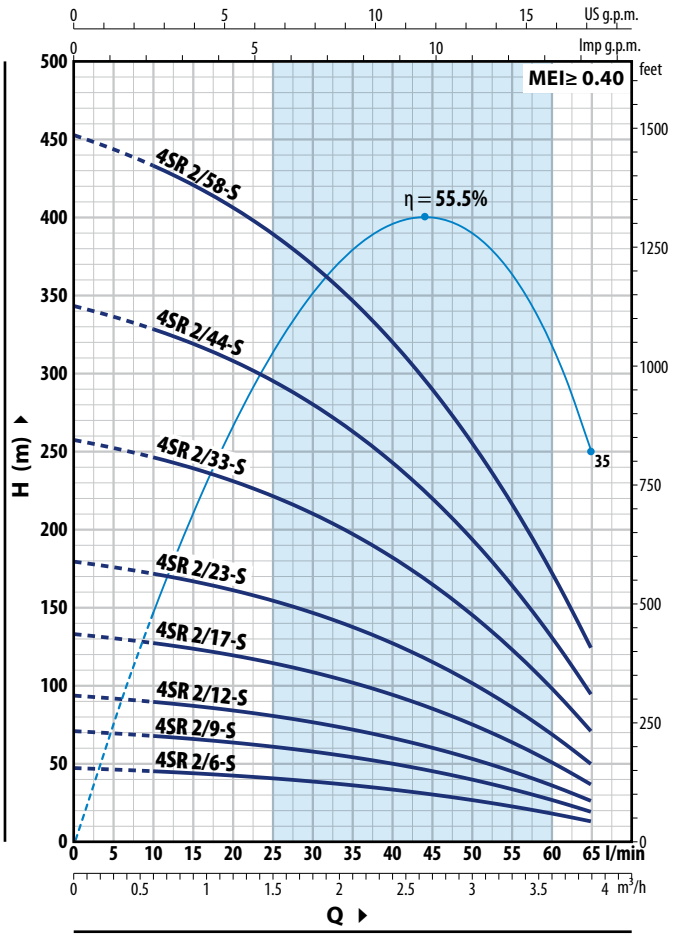

4SR 4-S

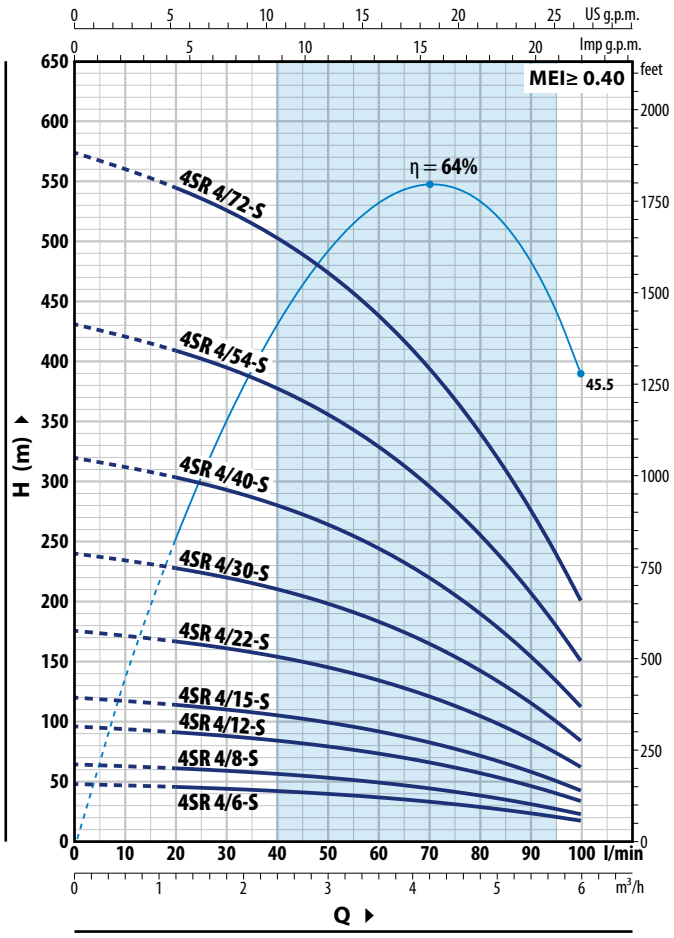

4SR 2-S

TYPE		POWER (P2)		Q m³/h	0	0.6	1.2	1.8	2.4	3.0	3.6	3.9
Single-phase	**Three-phase**	**kW**	**HP**	Q l/min	**0**	**10**	**20**	**30**	**40**	**50**	**60**	**65**
4SRm 2/6 - S	**4SR 2/6 - S**	0.37	0.50		47	45	42	38	33	26.4	18	13
4SRm 2/9 - S	**4SR 2/9 - S**	0.55	0.75		70	67	63	57.5	49.5	39.5	26.8	19.5
4SRm 2/12 - S	**4SR 2/12 - S**	0.75	1		94	90	84	76	66	53	36	25.5
4SRm 2/17 - S	**4SR 2/17 - S**	1.1	1.5		133	127	119	108	94	75	50.5	36.5
4SRm 2/23 - S	**4SR 2/23 - S**	1.5	2	**H** metres	179	172	161	146	127	101	68.5	49
4SRm 2/33 - S	**4SR 2/33 - S**	2.2	3		257	246	231	210	182	145	98	71
–	**4SR 2/44 - S**	3	4		343	328	308	280	243	194	131	94
–	**4SR 2/58 - S**	4	5.5		452	433	406	369	320	256	173	124

4SR 4-S

TYPE		POWER (P2)		Q m³/h	0	1.2	1.8	2.4	3.0	3.6	4.2	4.8	5.4	6.0
Single-phase	**Three-phase**	**kW**	**HP**	Q l/min	**0**	**20**	**30**	**40**	**50**	**60**	**70**	**80**	**90**	**100**
4SRm 4/6 - S	**4SR 4/6 - S**	0.55	0.75		48	45.5	44	42	39.5	36.5	33	28.5	23.2	17
4SRm 4/8 - S	**4SR 4/8 - S**	0.75	1		64	60.5	58.5	56	53	49	44	38	31	22.5
4SRm 4/12 - S	**4SR 4/12 - S**	1.1	1.5		96	91	88	84	79	73	66	57	46.5	33.5
4SRm 4/15 - S	**4SR 4/15 - S**	1.5	2		120	114	110	105	99	92	83	71	58	42
4SRm 4/22 - S	**4SR 4/22 - S**	2.2	3	**H** metres	176	167	161	154	145	134	121	105	85	61.5
–	**4SR 4/30 - S**	3	4		240	228	220	210	198	183	165	143	116	84
–	**4SR 4/40 - S**	4	5.5		320	304	293	280	264	244	220	190	154	112
–	**4SR 4/54 - S**	5.5	7.5		432	410	396	379	357	330	297	257	209	151
–	**4SR 4/72 - S**	7.5	10		576	547	528	505	476	440	396	342	278	202

Q = Flow rate **H** = Total manometric head

Performance curves comply with EN ISO 9906 Grade 3B tolerance limits.

CURVES AND PERFORMANCE DATA

50 Hz

4SR 6-S

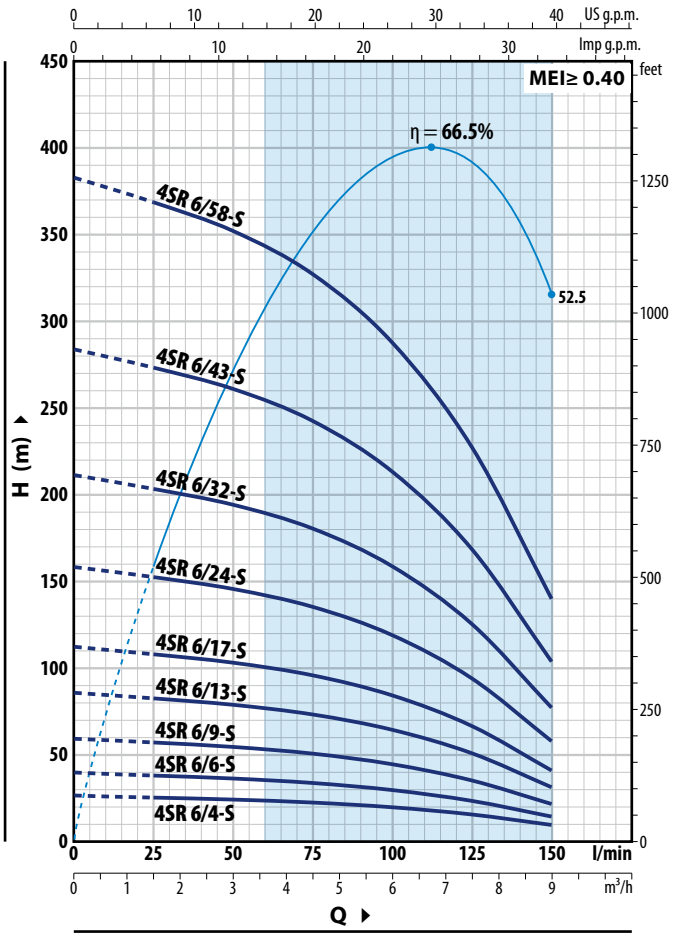

4SR 8- S

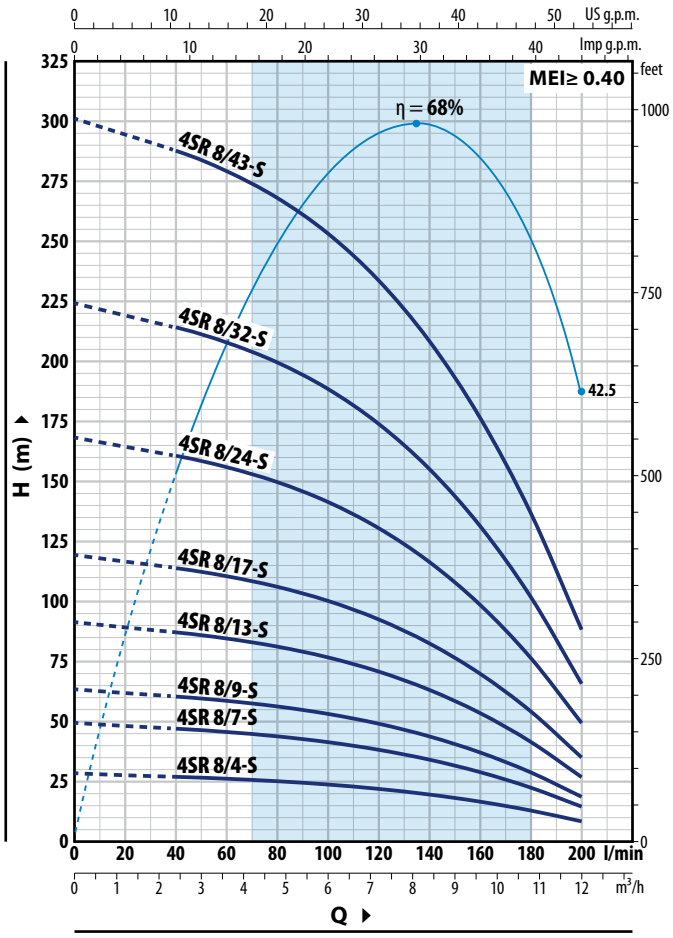

4SR 6-S

TYPE		POWER (P2)		Q m³/h	0	1.5	3.0	4.5	6.0	7.5	9.0
Single-phase	Three-phase	kW	HP	Q l/min	**0**	**25**	**50**	**75**	**100**	**125**	**150**
4SRm 6/4 - S	**4SR 6/4 - S**	0.55	0.75		26.5	25.5	24.3	22.5	19.8	15.7	9.5
4SRm 6/6 - S	**4SR 6/6 - S**	0.75	1		39.5	38	36.5	34	29.5	23.5	14.5
4SRm 6/9 - S	**4SR 6/9 - S**	1.1	1.5		59.5	57	54.5	50.5	44.5	35.5	21.5
4SRm 6/13 - S	**4SR 6/13 - S**	1.5	2		86	83	79	73	64.5	51	31.5
4SRm 6/17 - S	**4SR 6/17 - S**	2.2	3	**H** metres	112	108	103	96	84	66.5	41
–	**4SR 6/24 - S**	3	4		158	152	146	135	119	94	58
–	**4SR 6/32 - S**	4	5.5		211	203	194	180	159	125	77
–	**4SR 6/43 - S**	5.5	7.5		284	273	261	242	213	168	104
–	**4SR 6/58 - S**	7.5	10		383	368	352	327	287	227	140

4SR 8-S

TYPE		POWER (P2)		Q m³/h	0	2.4	3.6	4.8	6.0	7.2	8.4	9.6	10.8	12.0
Single-phase	Three-phase	kW	HP	Q l/min	**0**	**40**	**60**	**80**	**100**	**120**	**140**	**160**	**180**	**200**
4SRm 8/4 - S	**4SR 8/4 - S**	0.75	1		28	27	26	25	23.6	21.8	19.4	16.4	12.7	8
4SRm 8/7 - S	**4SR 8/7 - S**	1.1	1.5		49	47	45.5	43.5	41.5	38	34	28.5	22.3	14.5
4SRm 8/9 - S	**4SR 8/9 - S**	1.5	2		63	60.5	58.5	56	53	49	43.5	37	28.5	18.5
4SRm 8/13 - S	**4SR 8/13 - S**	2.2	3	**H** metres	91	87	85	81	77	71	63	53.5	41.5	26.5
–	**4SR 8/17 - S**	3	4		119	114	111	106	100	92	82	70	54	35
–	**4SR 8/24 - S**	4	5.5		168	161	156	150	141	131	116	99	76	49
–	**4SR 8/32 - S**	5.5	7.5		224	214	208	200	189	174	155	131	102	65.5
–	**4SR 8/43 - S**	7.5	10		301	288	280	268	253	234	209	177	137	88

Q = Flow rate **H** = Total manometric head

Performance curves comply with EN ISO 9906 Grade 3B tolerance limits.

CURVES AND PERFORMANCE DATA

50 Hz

4SR 10-N

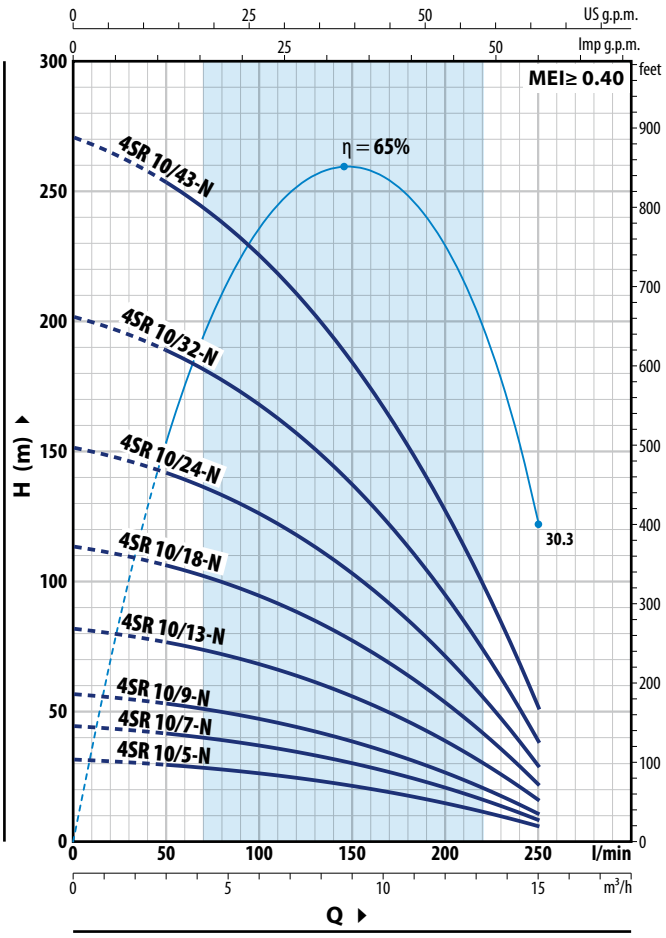

4SR 12-N

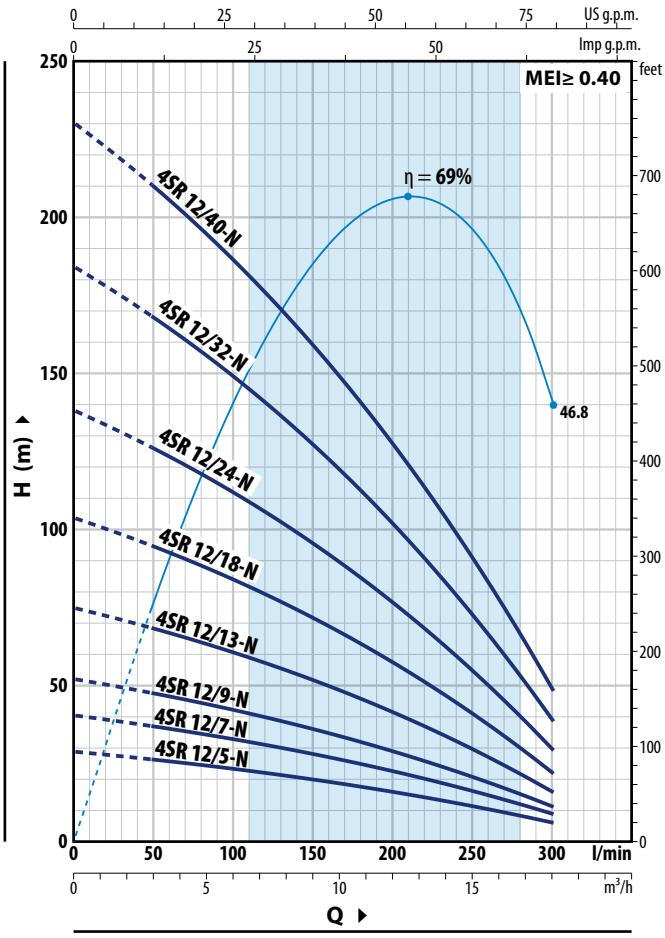

4SR 10-N

TYPE		POWER (P2)		Q m³/h	0	3.0	6.0	7.5	9.0	10.5	12.0	13.5	15.0
Single-phase	**Three-phase**	**kW**	**HP**	**Q l/min**	**0**	**50**	**100**	**125**	**150**	**175**	**200**	**225**	**250**
4SRm 10/5 - N	**4SR 10/5 - N**	0.75	1	**H** metres	31.5	29.5	26.2	24	21.4	18.3	14.7	10.6	6
4SRm 10/7 - N	**4SR 10/7 - N**	1.1	1.5		44	41.5	36.5	33.5	30	25.6	20.6	14.8	8.5
4SRm 10/9 -N	**4SR 10/9 - N**	1.5	2		56.5	53	47	43	38.5	33	26.5	19.1	10.5
4SRm 10/13 - N	**4SR 10/13 - N**	2.2	3		82	77	68	62.5	55.5	47.5	38	27.5	15.5
–	**4SR 10/18 - N**	3	4		113	106	94	86	77	66	53	38	21
–	**4SR 10/24 - N**	4	5.5		151	141	126	115	103	88	71	51	28.5
–	**4SR 10/32 - N**	5.5	7.5		202	189	168	154	137	117	94	68	38
–	**4SR 10/43 - N**	7.5	10		271	254	226	206	184	157	126	91	51

4SR 12-N

TYPE		POWER (P2)		Q m³/h	0	3	6	9	12	15	18
Single-phase	**Three-phase**	**kW**	**HP**	**Q l/min**	**0**	**50**	**100**	**150**	**200**	**250**	**300**
4SRm 12/5 - N	**4SR 12/5 - N**	0.75	1	**H** metres	29	26	23.2	19.8	15.9	11.3	6
4SRm 12/7 - N	**4SR 12/7 - N**	1.1	1.5		40.5	36.5	32.5	27.5	22.2	15.8	8.5
4SRm 12/9 - N	**4SR 12/9 - N**	1.5	2		52	47	42	35.5	28.5	20.3	11
4SRm 12/13 - N	**4SR 12/13 - N**	2.2	3		75	68	60.5	51.5	41	29.5	15.5
–	**4SR 12/18 - N**	3	4		104	94	84	71	57	40.5	21.5
–	**4SR 12/24 - N**	4	5.5		138	126	112	95	76	54	29
–	**4SR 12/32 - N**	5.5	7.5		184	168	149	127	101	72	38.5
–	**4SR 12/40 - N**	7.5	10		230	210	186	159	127	90	48

Q = Flow rate **H** = Total manometric head

Performance curves comply with EN ISO 9906 Grade 3B tolerance limits.

CURVES AND PERFORMANCE DATA

50 Hz

4SR 15-N

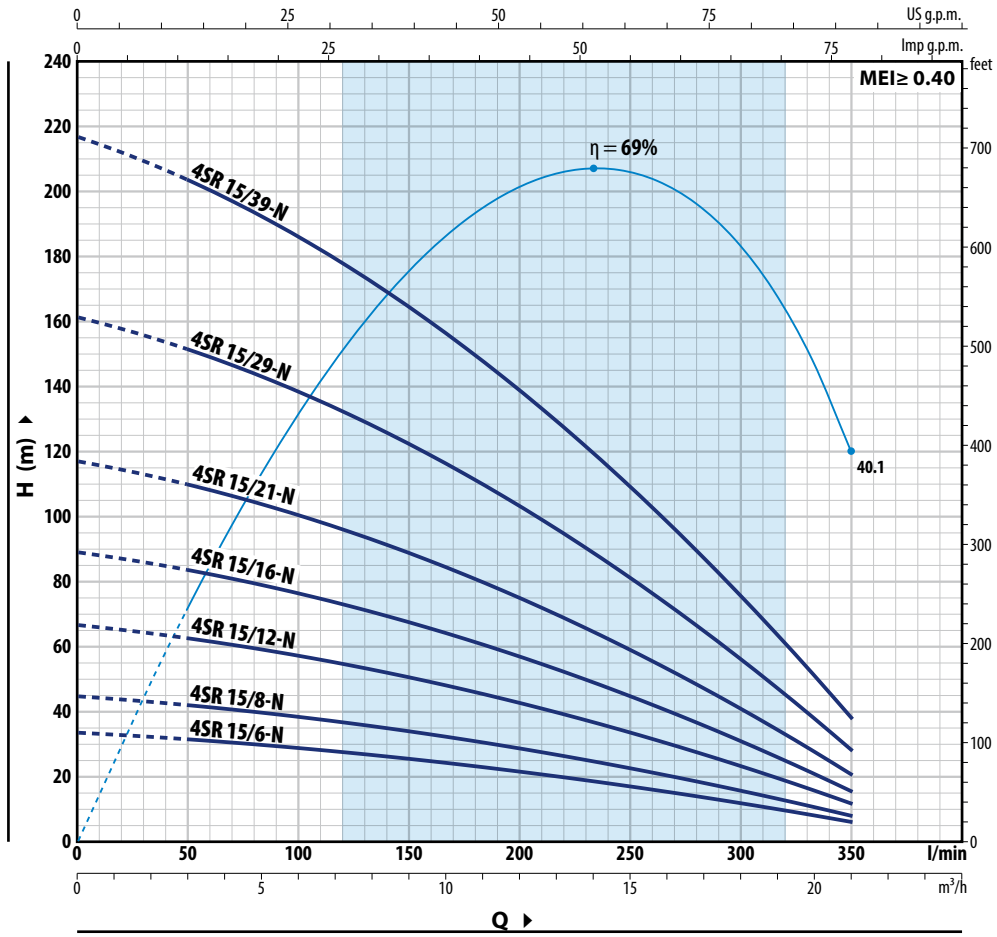

4SR 15-N

TYPE		POWER (P2)		Q m³/h	0	3.0	6.0	9.0	12	15	18	21.0
Single-phase	**Three-phase**	**kW**	**HP**	Q l/min	**0**	**50**	**100**	**150**	**200**	**250**	**300**	**350**
4SRm 15/6 - N	**4SR 15/6 - N**	1.1	1.5		33.5	31.5	28.5	25.3	21.3	16.7	11.6	6
4SRm 15/8 - N	**4SR 15/8 - N**	1.5	2		44.5	41.5	38	33.5	28.5	22.3	15.4	7.5
4SRm 15/12 - N	**4SR 15/12 - N**	2.2	3		66.5	62.5	57	50.5	42.5	33.5	23.1	11.5
–	**4SR 15/16 - N**	3	4	**H** metres	89	83	76	67.5	57	44.5	31	15.5
–	**4SR 15/21 - N**	4	5.5		117	110	100	88	75	58.5	40.5	20
–	**4SR 15/29 - N**	5.5	7.5		161	151	138	122	103	81	56	28
–	**4SR 15/39 - N**	7.5	10		217	203	186	164	139	109	75	37.5

Q = Flow rate **H** = Total manometric head

Performance curves comply with EN ISO 9906 Grade 3B tolerance limits.

MATERIALS AND COMPONENTS

1	**Delivery port**	Micro-cast **AISI 304** stainless steel with thread according to ISO 228/1
2	**Check valve**	Stainless steel **AISI 304**
3	**Motor bracket**	Stainless steel **AISI 304**, sized to NEMA standards
4	**Impeller**	Delrin® for 4SR-S, Noryl™ for 4SR-N
5	**Diffuser**	Noryl™
6	**Stadium box**	Stainless steel **AISI 304**
7	**Pump shaft**	Stainless steel **AISI 304**
8	**Pump bearings**	Made of **AISI 316L** stainless steel coated with chromium oxide to resist sand
9	**Tow coupling**	Stainless steel
10	**Filter**	Stainless steel **AISI 304**
11	**Cable sheath**	Stainless steel **AISI 304**
12	**Motor 4"**	※ **4PD = rewindable oil filled motor** ※ **4PS = encapsulated water filled motor**

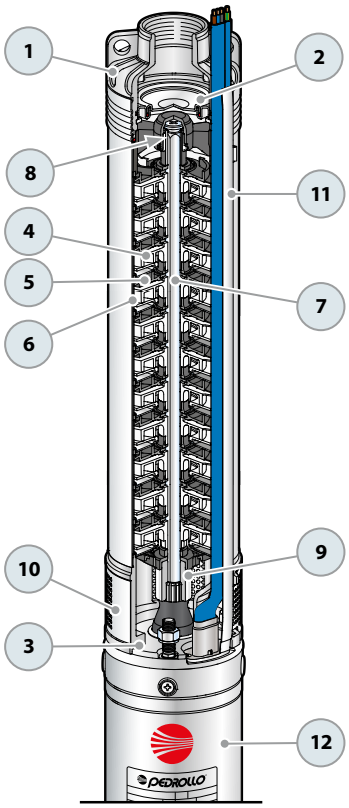

DIMENSIONS AND WEIGHTS (single-phase models)

TYPE Single-phase ※	DN	DIMENSIONS mm h1	h2	h3	kg	TYPE Single-phase ※	DN	DIMENSIONS mm h1	h2	h3	kg
4SRm 1/10 - S - PD		362	311	673	10.8	**4SRm 1/10 - S - PS**		362	237	599	12.3
4SRm 1/15 - S - PD		488	331	819	13.2	**4SRm 1/15 - S - PS**		488	257	745	14.4
4SRm 1/20 - S - PD		588	356	944	15.9	**4SRm 1/20 - S - PS**		588	272	860	16.6
4SRm 1/29 - S - PD		767	396	1163	19.9	**4SRm 1/29 - S - PS**		767	312	1079	20.6
4SRm 1/39 - S - PD		992	437	1429	24.4	**4SRm 1/39 - S - PS**		992	352	1344	25
4SRm 1/50 - S - PD		1284	492	1776	31.3	**4SRm 1/50 - S - PS**		1284	402	1686	30.6
4SRm 1.5/7 - S - PD		303	311	614	10.1	**4SRm 1.5/7 - S - PS**		303	237	540	10.1
4SRm 1.5/11 - S - PD		382	331	713	11.8	**4SRm 1.5/11 - S - PS**		382	257	639	12.2
4SRm 1.5/15 - S - PD		488	356	844	14.0	**4SRm 1.5/15 - S - PS**		488	272	760	14.8
4SRm 1.5/22 - S - PD		627	396	1023	17.8	**4SRm 1.5/22 - S - PS**		627	312	939	18.4
4SRm 1.5/30 - S - PD		787	437	1224	21.4	**4SRm 1.5/30 - S - PS**		787	352	1139	22.6
4SRm 1.5/44 - S - PD	**1¼"**	1163	492	1655	29.2	**4SRm 1.5/44 - S - PS**	**1¼"**	1163	402	1565	28.8
4SRm 2/6 - S - PD		283	311	594	10.0	**4SRm 2/6 - S - PS**		283	237	520	10.2
4SRm 2/9 - S - PD		343	331	674	11.4	**4SRm 2/9 - S - PS**		343	257	600	11.8
4SRm 2/12 - S - PD		402	356	758	13.3	**4SRm 2/12 - S - PS**		402	272	674	14.0
4SRm 2/17 - S - PD		528	396	924	16.1	**4SRm 2/17 - S - PS**		528	312	840	17.0
4SRm 2/23 - S - PD		647	437	1084	20.1	**4SRm 2/23 - S - PS**		647	352	999	20.6
4SRm 2/33 - S - PD		873	492	1365	24.9	**4SRm 2/33 - S - PS**		873	402	1275	24.8
4SRm 4/6 - S - PD		313	331	644	11.2	**4SRm 4/6 - S - PS**		313	257	570	11.5
4SRm 4/8 - S - PD		363	356	719	12.9	**4SRm 4/8 - S - PS**		363	272	635	13.6
4SRm 4/12 - S - PD		462	396	858	15.5	**4SRm 4/12 - S - PS**		462	312	774	15.3
4SRm 4/15 - S - PD		563	437	1000	18.4	**4SRm 4/15 - S - PS**		563	352	915	18.8
4SRm 4/22 - S - PD		737	492	1229	23.2	**4SRm 4/22 - S - PS**		737	402	1139	24.0
4SRm 6/4 - S - PD		289	331	620	11.0	**4SRm 6/4 - S - PS**		289	257	546	11.1
4SRm 6/6 - S - PD		352	356	708	12.7	**4SRm 6/6 - S - PS**		352	272	624	13.2
4SRm 6/9 - S - PD		446	396	842	15.2	**4SRm 6/9 - S - PS**		446	312	758	15.8
4SRm 6/13 - S - PD		598	437	1035	18.4	**4SRm 6/13 - S - PS**		598	352	950	19.0
4SRm 6/17 - S - PD	**2"**	723	492	1215	22.7	**4SRm 6/17 - S - PS**	**2"**	723	402	1125	22.8
4SRm 8/4 - S - PD		289	356	645	12.1	**4SRm 8/4 - S - PS**		289	272	561	12.3
4SRm 8/7 - S - PD		382	396	778	15.0	**4SRm 8/7 - S - PS**		382	312	694	15.4
4SRm 8/9 - S - PD		446	437	883	17.0	**4SRm 8/9 - S - PS**		446	352	798	17.8
4SRm 8/13 - S - PD		598	492	1090	21.0	**4SRm 8/13 - S - PS**		598	402	1000	20.2

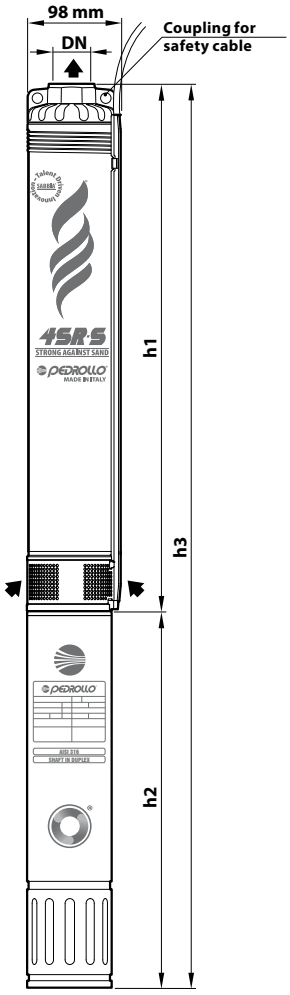

DIMENSIONS AND WEIGHTS (three-phase models)

TYPE Three-phase ※	DN	DIMENSIONS mm h1	h2	h3	kg	TYPE Three-phase ※	DN	DIMENSIONS mm h1	h2	h3	kg
4SR 1/10 - S - PD		362	311	673	10.6	**4SR 1/10 - S - PS**		362	237	599	12.2
4SR 1/15 - S - PD		488	331	819	13.5	**4SR 1/15 - S - PS**		488	237	725	13.9
4SR 1/20 - S - PD		588	356	944	14.2	**4SR 1/20 - S - PS**		588	257	845	15.6
4SR 1/29 - S - PD		767	371	1138	17.8	**4SR 1/29 - S - PS**		767	272	1039	18.8
4SR 1/39 - S - PD		992	396	1388	22.8	**4SR 1/39 - S - PS**		992	297	1289	22.6
4SR 1/50 - S - PD		1284	437	1721	28.1	**4SR 1/50 - S - PS**		1284	352	1636	29.8
4SR 1.5/7 - S - PD		303	311	614	10.0	**4SR 1.5/7 - S - PS**		303	237	540	10.1
4SR 1.5/11 - S - PD		382	331	713	11.7	**4SR 1.5/11 - S - PS**		382	237	619	11.1
4SR 1.5/15 - S - PD		488	356	844	13.8	**4SR 1.5/15 - S - PS**		488	257	745	13.8
4SR 1.5/22 - S - PD		627	371	998	16.2	**4SR 1.5/22 - S - PS**		627	272	899	16.4
4SR 1.5/30 - S - PD		787	396	1183	19.3	**4SR 1.5/30 - S - PS**		787	297	1084	20.5
4SR 1.5/44 - S - PD		1163	437	1600	26.6	**4SR 1.5/44 - S - PS**		1163	352	1515	28.0
4SR 2/6 - S - PD		283	311	594	9.8	**4SR 2/6 - S - PS**		283	237	520	10.2
4SR 2/9 - S - PD		343	331	674	11.4	**4SR 2/9 - S - PS**		343	237	580	10.7
4SR 2/12 - S - PD	**1¼"**	402	356	758	13.1	**4SR 2/12 - S - PS**	**1¼"**	402	257	659	13.2
4SR 2/17 - S - PD		528	371	899	15.0	**4SR 2/17 - S - PS**		528	272	800	15.5
4SR 2/23 - S - PD		647	396	1043	17.7	**4SR 2/23 - S - PS**		647	297	944	17.8
4SR 2/33 - S - PD		873	437	1310	22.3	**4SR 2/33 - S - PS**		873	352	1225	24.0
4SR 2/44 - S - PD		1163	450	1613	27.8	**4SR 2/44 - S - PS**		1163	484	1647	31.6
4SR 2/58 - S - PD		1432	625	2057	34.4	**4SR 2/58 - S - PS**		1432	574	2006	41.7
4SR 4/6 - S - PD		313	331	644	11.0	**4SR 4/6 - S - PS**		313	237	550	11.2
4SR 4/8 - S - PD		363	356	719	12.4	**4SR 4/8 - S - PS**		363	257	620	12.6
4SR 4/12 - S - PD		462	371	833	15.5	**4SR 4/12 - S - PS**		462	272	734	14.2
4SR 4/15 - S - PD		563	396	959	16.3	**4SR 4/15 - S - PS**		563	297	860	16.2
4SR 4/22 - S - PD		737	437	1174	20.3	**4SR 4/22 - S - PS**		737	352	1089	20.8
4SR 4/30 - S - PD		963	450	1413	23.7	**4SR 4/30 - S - PS**		963	484	1447	28.4
4SR 4/40 - S - PD		1284	625	1909	35.0	**4SR 4/40 - S - PS**		1284	574	1858	40.4
4SR 4/54 - S - PD		1684	725	2409	47.0	**4SR 4/54 - S - PS**		1684	664	2348	40.0
4SR 4/72 - S - PD		2134	845	2979	54.0	**4SR 4/72 - S - PS**		2134	764	2898	54.4
4SR 6/4 - S - PD		289	331	620	10.8	**4SR 6/4 - S - PS**		289	237	526	10.0
4SR 6/6 - S - PD		352	356	708	12.0	**4SR 6/6 - S - PS**		352	257	609	12.4
4SR 6/9 - S - PD		446	371	817	13.9	**4SR 6/9 - S - PS**		446	272	718	14.0
4SR 6/13 - S - PD		598	396	994	16.3	**4SR 6/13 - S - PS**		598	297	895	17.3
4SR 6/17 - S - PD		723	437	1160	20.0	**4SR 6/17 - S - PS**		723	352	1075	20.4
4SR 6/24 - S - PD		969	450	1419	23.5	**4SR 6/24 - S - PS**		969	484	1453	27.3
4SR 6/32 - S - PD		1247	625	1872	32.0	**4SR 6/32 - S - PS**		1247	574	1821	35.2
4SR 6/43 - S - PD		1618	725	2343	45.0	**4SR 6/43 - S - PS**		1618	664	2282	45.0
4SR 6/58 - S - PD	**2"**	2161	845	3006	55.0	**4SR 6/58 - S - PS**	**2"**	2161	764	2925	55.0
4SR 8/4 - S - PD		289	356	645	11.6	**4SR 8/4 - S - PS**		289	257	546	11.1
4SR 8/7 - S - PD		382	371	753	13.4	**4SR 8/7 - S - PS**		382	272	654	14.3
4SR 8/9 - S - PD		446	396	842	15.1	**4SR 8/9 - S - PS**		446	297	743	15.0
4SR 8/13 - S - PD		598	437	1035	18.2	**4SR 8/13 - S - PS**		598	352	950	18.8
4SR 8/17 - S - PD		723	450	1173	21.1	**4SR 8/17 - S - PS**		723	484	1207	25.8
4SR 8/24 - S - PD		969	625	1594	30.0	**4SR 8/24 - S - PS**		969	574	1543	33.7
4SR 8/32 - S - PD		1247	725	1972	40.6	**4SR 8/32 - S - PS**		1247	664	1911	39.4
4SR 8/43 - S - PD		1618	845	2463	49.0	**4SR 8/43 - S - PS**		1618	764	2382	49.0

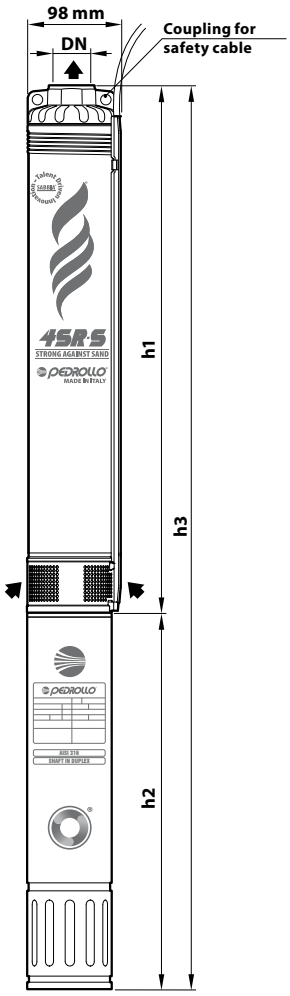

※ 4PD = rewindable in oil filled motor

※ 4PS = encapsulated water filled motor

DIMENSIONS AND WEIGHT

TYPE	DN	DIMENSIONS mm			kg	TYPE	DN	DIMENSIONS mm			kg
Single-phase ※		h1	h2	h3		**Single-phase ※**		h1	h2	h3	
4SRm 10/5 - N - PD		430	357	787	12.4	**4SRm 10/5 - N - PS**		430	272	702	13.0
4SRm 10/7 - N - PD		532	397	929	16.7	**4SRm 10/7 - N - PS**		532	312	844	17.7
4SRm 10/9 - N - PD		633	437	1070	18.9	**4SRm 10/9 - N - PS**		633	352	985	20.6
4SRm 10/13 - N - PD		837	492	1329	25.6	**4SRm 10/13 - N - PS**		837	402	1239	24.9
4SRm 12/5 - N - PD		488	357	845	13.0	**4SRm 12/5 - N - PS**		488	272	760	13.5
4SRm 12/7 - N - PD	**2"**	613	397	1010	15.5	**4SRm 12/7 - N - PS**	**2"**	613	312	925	16.5
4SRm 12/9 - N - PD		738	437	1175	18.5	**4SRm 12/9 - N - PS**		738	352	1090	20.0
4SRm 12/13 - N - PD		989	492	1481	23.5	**4SRm 12/13 - N - PS**		989	402	1391	23.0
4SRm 15/6 - N - PD		550	397	947	16.0	**4SRm 15/6 - N - PS**		550	312	862	16.0
4SRm 15/8 - N - PD		676	437	1113	19.5	**4SRm 15/8 - N - PS**		676	352	1028	19.5
4SRm 15/12 - N - PD		926	492	1418	22.5	**4SRm 15/12 - N - PS**		926	402	1328	22.5
Three-phase ※						**Three-phase ※**					
4SR 10/5 - N - PD		430	357	787	12.4	**4SR 10/5 - N - PS**		430	257	687	11.8
4SR 10/7 - N - PD		532	372	904	14.2	**4SR 10/7 - N - PS**		532	272	804	13.9
4SR 10/9 - N - PD		633	397	1030	15.9	**4SR 10/9 - N - PS**		633	297	930	16.9
4SR 10/13 - N - PD		837	437	1274	19.2	**4SR 10/13 - N - PS**		837	352	1189	20.9
4SR 10/18 - N - PD		1092	450	1542	23.0	**4SR 10/18 - N - PS**		1092	484	1576	26.8
4SR 10/24 - N - PD		1398	625	2023	32.4	**4SR 10/24 - N - PS**		1398	574	1972	37.4
4SR 10/32 - N - PD		1805	725	2530	43.4	**4SR 10/32 - N - PS**		1805	664	2469	43.8
4SR 10/43 - N - PD		2366	845	3211	52.0	**4SR 10/43 - N - PS**		2366	764	3130	52.4
4SR 12/5 - N - PD		488	357	845	13.0	**4SR 12/5 - N - PS**		488	257	745	12.0
4SR 12/7 - N - PD		613	372	985	14.5	**4SR 12/7 - N - PS**		613	272	885	14.5
4SR 12/9 - N - PD		738	397	1135	17.0	**4SR 12/9 - N - PS**		738	297	1035	18.0
4SR 12/13 - N - PD	**2"**	989	437	1426	20.5	**4SR 12/13 - N - PS**	**2"**	989	352	1341	22.0
4SR 12/18 - N - PD		1302	450	1752	25.0	**4SR 12/18 - N - PS**		1302	484	1786	25.6
4SR 12/24 - N - PD		1677	625	2302	34.5	**4SR 12/24 - N - PS**		1677	574	2251	38.0
4SR 12/32 - N - PD		2178	725	2903	46.1	**4SR 12/32 - N - PS**		2178	664	2842	46.5
4SR 12/40 - N - PD		2679	845	3524	54.0	**4SR 12/40 - N - PS**		2679	764	3443	54.0
4SR 15/6 - N - PD		550	372	922	15.0	**4SR 15/6 - N - PS**		550	272	822	14.0
4SR 15/8 - N - PD		676	397	1073	17.9	**4SR 15/8 - N - PS**		676	297	973	17.5
4SR 15/12 - N - PD		926	437	1363	22.4	**4SR 15/12 - N - PS**		926	352	1278	21.5
4SR 15/16 - N - PD		1176	450	1626	25.4	**4SR 15/16 - N - PS**		1176	484	1660	27.5
4SR 15/21 - N - PD		1489	625	2114	33.0	**4SR 15/21 - N - PS**		1489	574	2063	36.5
4SR 15/29 - N - PD		1990	725	2715	48.2	**4SR 15/29 - N - PS**		1990	664	2654	45.0
4SR 15/39 - N - PD		2616	845	3461	58.0	**4SR 15/39 - N - PS**		2616	764	3380	53.5

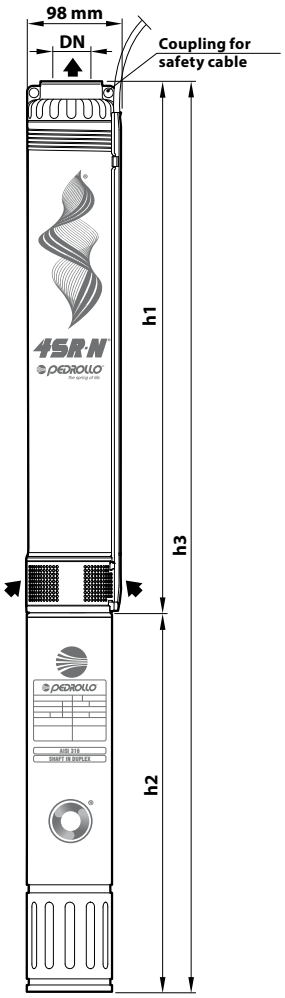

※ 4PD = rewindable oil filled motor

※ 4PS = encapsulated water filled motor

EXAMPLES OF INSTALLATION

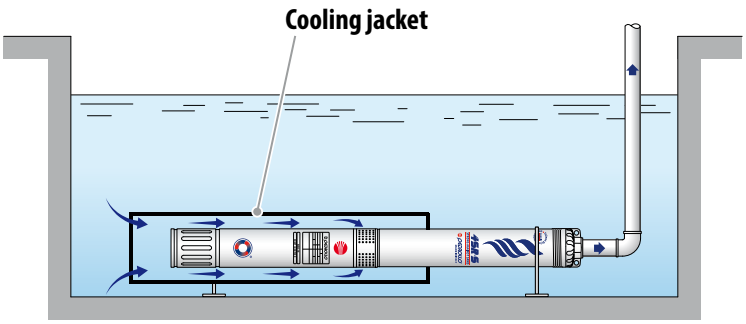

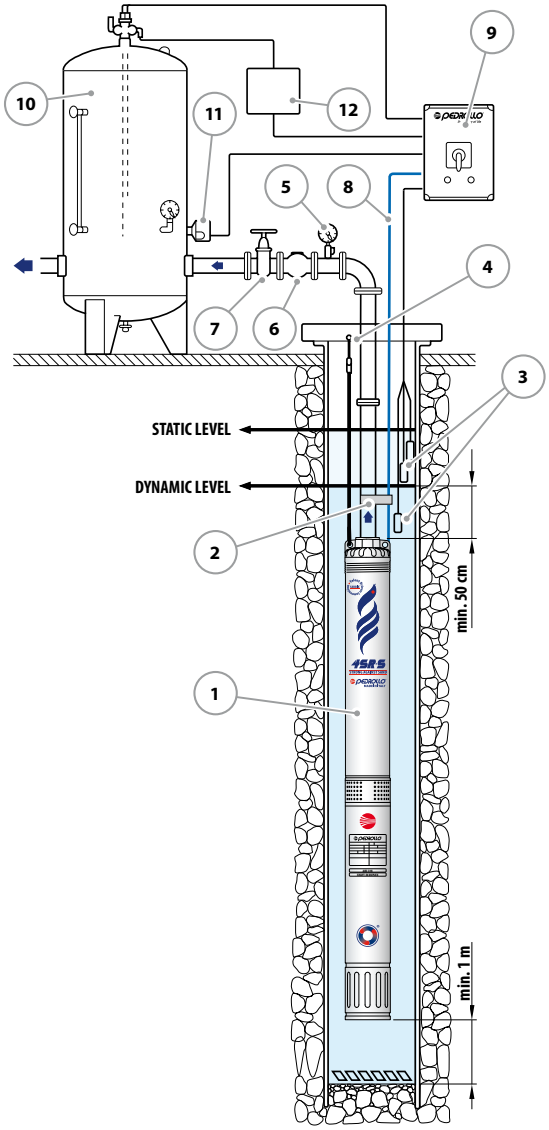

COOLING JACKET

※ When the pump is installed in reservoirs, rivers, or lakes, it requires an external cooling jacket (flow generator) to ensure sufficient water flow across the motor surface, preventing overheating.

※ Recommended for power ratings from 3 kW to 7.5 kW

※ The **4SR** pumps are suitable for wells with a minimum diameter of **4"** (**100 mm**).

※ The submersible pump must be lowered into the well through the delivery pipe to a depth that ensures it remains fully submerged, maintaining at least 50 cm or one metre from the bottom of the well, even if liquid levels decrease during operation.

※ It is advisable to secure the submersible pump using a stainless-steel cable connected to appropriate attachments on the delivery port.

COMPONENTS

1) Submersible pump
2) Fixing Ties
3) Level control probes
4) Bracket and anchor cable
5) Pressure Gauge
6) Check valve
7) Flow control gate valve
8) Electrical power supply cable
9) Control panel
10) Autoclave tank
11) Pressure switch
12) Solenoid valve/electric compressor

6SR 6" submersible pumps

Clean water
(Maximum sand content 100 g/m³)

Civil use

Agricultural use

※ 6SR submersible pumps: designed with special materials to resist sand abrasion for long-lasting performance

PERFORMANCE RANGE

- Flow rate up to **1000 l/min** (60 m³/h)
- Head up to **390 m**

INSTALLATION AND USE

Designed to transfer clean water with sand content up to **100 g/m³**. Highly efficient and reliable, they are suitable for industrial, civil, and agricultural applications, such as water distribution coupled with pressure tanks, irrigation, pressure boosting, fire-fighting systems, and more.

INCLUDES

※ Three-phase electric motor 400 V - 50 Hz
The pump can be supplied with motor:
– **6PD** rewindable and oil filled
– **6PSR** rewindable and water filled

※ **4 m** power cable

APPLICATION LIMITS

- Liquid temperature up to **+35 °C**
- Maximum sand content **100 g/m³**
- Maximum operating depth below water level:
  – **200 m** with 6PD motors
  – **150 m** with 6PSR motors
- Operation:
  – in vertical position
  – horizontally with the following limits: up to **12 stages** or up to **11 kW**
- Starts per hour: **20** at regular intervals
- Minimum cooling flow **8 cm/s**
- Continuous running duty **S1**

AVAILABLE UPON REQUEST

※ 6SR-HYD pumps with double cable cover for coupling with 400/690 V ⅄/Δ dual voltage motors (star/delta)

※ Other voltages

※ Cooling jacket kit complete with filter and supinlets

CURVES AND PERFORMANCE DATA

50 Hz

6SR 12

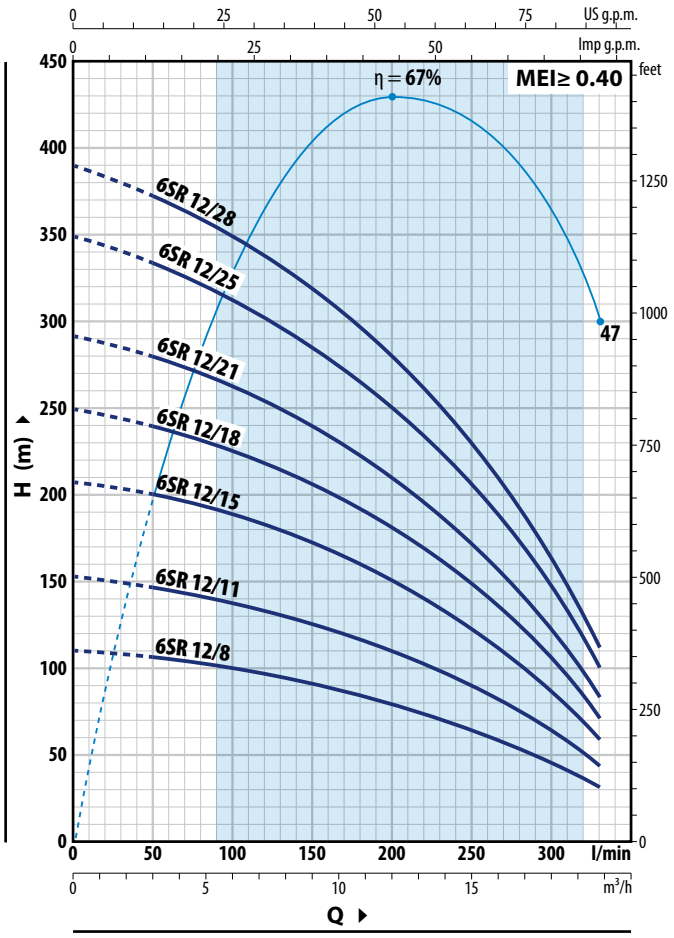

6SR 18

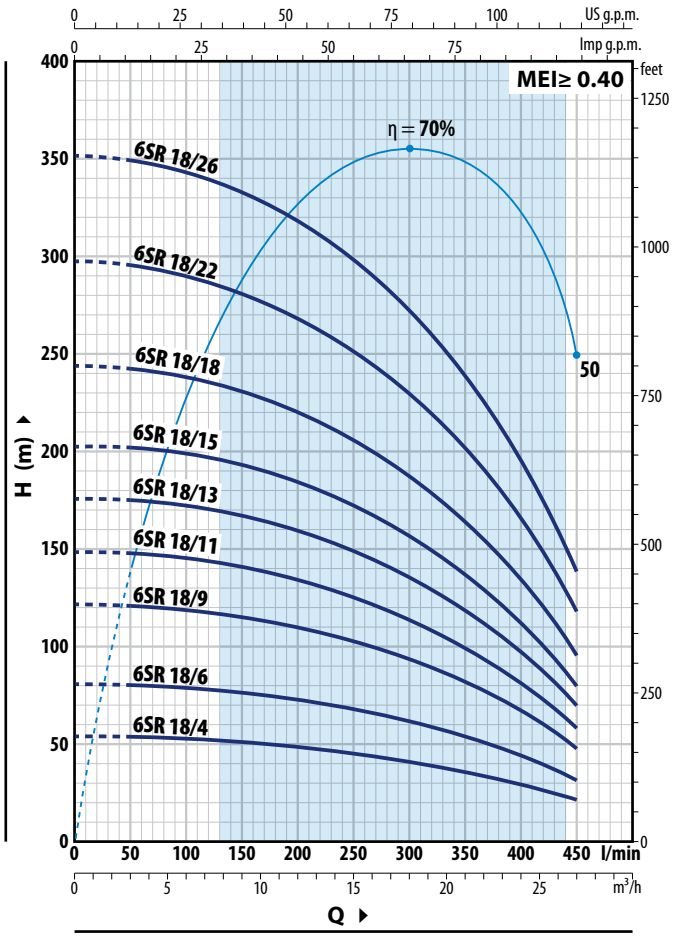

6SR 12

TYPE	POWER (P2)		Q m³/h	0	3.0	6.0	9.0	12.0	15.0	18.0	19.8
Three-phase	**kW**	**HP**	l/min	**0**	**50**	**100**	**150**	**200**	**250**	**300**	**330**
6SR 12/8	4	5.5		111	106	100	91	80	66	47	32
6SR 12/11	5.5	7.5		153	146	138	125	110	91	65	44
6SR 12/15	7.5	10		208	199	189	171	150	124	88	60
6SR 12/18	9.2	12.5	**H** metres	250	239	225	205	180	149	106	72
6SR 12/21	11	15		292	279	263	239	210	174	124	84
6SR 12/25	13	17.5		349	331	313	285	250	206	147	100
6SR 12/28	15	20		390	371	350	319	280	231	165	112

6SR 18

TYPE	POWER (P2)		Q m³/h	0	3	6	9	12	15	18	21	24	27
Three-phase	**kW**	**HP**	l/min	**0**	**50**	**100**	**150**	**200**	**250**	**300**	**350**	**400**	**450**
6SR 18/4	4	5.5		54	53.8	53	51	49	46	42	37	30	22
6SR 18/6	5.5	7.5		81	80.5	79	77	74	69	63	55	45	32
6SR 18/9	7.5	10		122	121	119	116	111	103	94	83	68	48
6SR 18/11	9.2	12.5		149	148	145.5	141	135	126	115	101	83	59
6SR 18/13	11	15	**H** metres	176	175	172	167	160	149	136	120	98	70
6SR 18/15	13	17.5		203	202	199	193	185	172	157	138	113	80
6SR 18/18	15	20		244	242	238	231	221	206	188	165	135	96
6SR 18/22	18.5	25		298	296	291	282	270	252	230	202	165	118
6SR 18/26	22	30		352	350	344	334	320	298	272	239	195	139

Q = Flow rate **H** = Total manometric head

Performance curves comply with EN ISO 9906 Grade 3B tolerance limits.

CURVES AND PERFORMANCE DATA

50 Hz

6SR 27

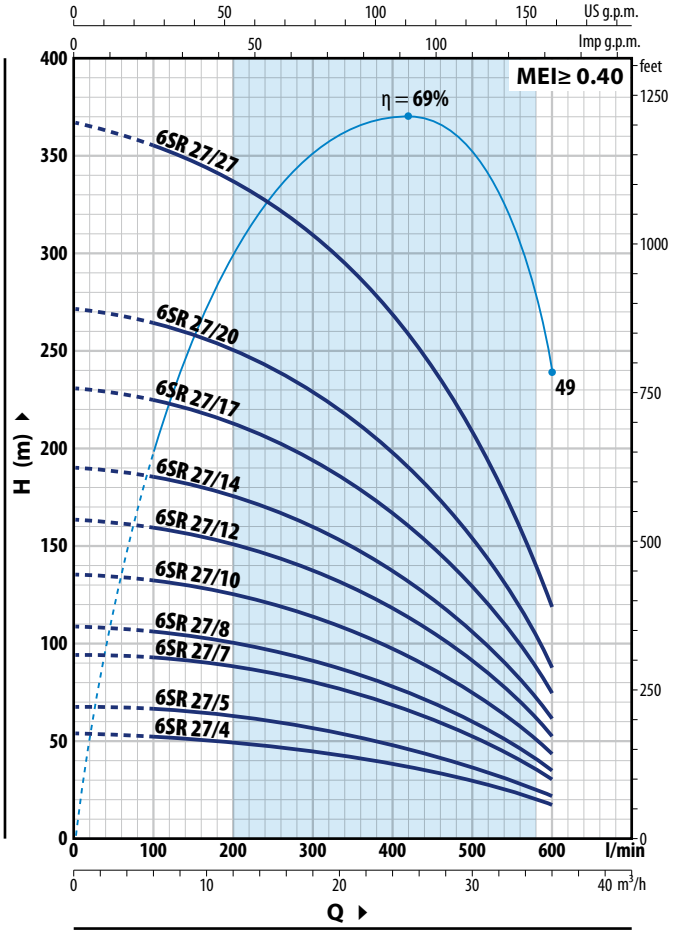

6SR 36

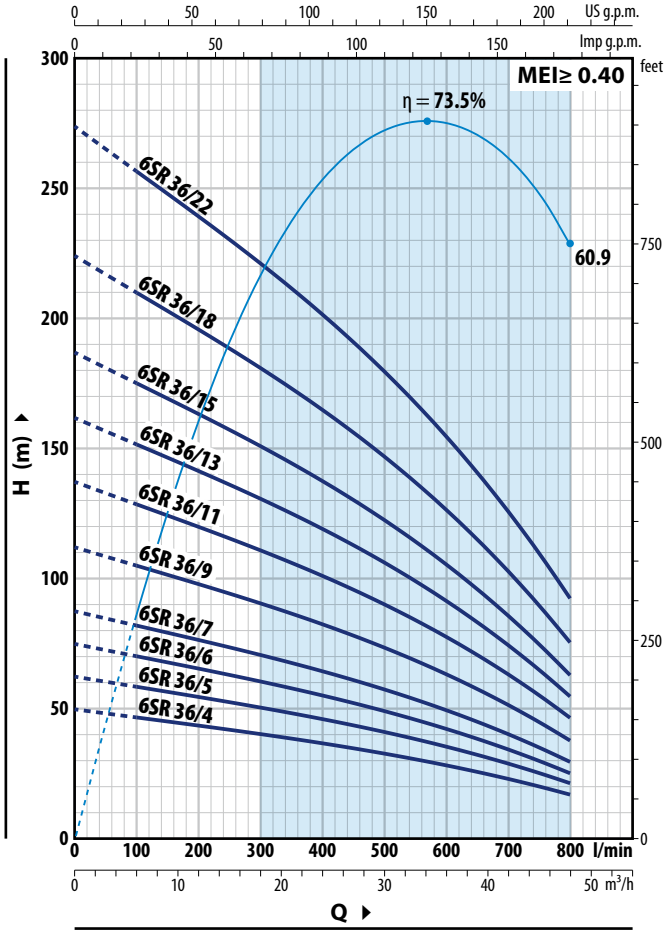

6SR 27

TYPE	POWER (P2)		Q m³/h	0	6	12	18	24	30	36
Three-phase	kW	HP	l/min	**0**	**100**	**200**	**300**	**400**	**500**	**600**
6SR 27/4	4	5.5	H metres	54	53	49	45	40	30	18
6SR 27/5	5.5	7.5		68	66	62	57	50	37	22
6SR 27/7	7.5	10		95	92	87	80	70	52	31
6SR 27/8	9.2	12.5		109	106	99	91	80	59	35
6SR 27/10	11	15		136	132	124	114	100	74	44
6SR 27/12	13	17.5		164	159	149	137	120	89	53
6SR 27/14	15	20		191	185	174	160	140	104	62
6SR 27/17	18.5	25		231	224	211	194	170	126	75
6SR 27/20	22	30		272	264	248	228	200	148	88
6SR 27/27	30	40		367	356	335	308	270	205	119

6SR 36

TYPE	POWER (P2)		Q m³/h	0	6	12	18	24	30	36	42	48
Three-phase	kW	HP	l/min	**0**	**100**	**200**	**300**	**400**	**500**	**600**	**700**	**800**
6SR 36/4	4	5.5	H metres	50	46.5	43.5	40	36.5	32.5	28	23	17
6SR 36/5	5.5	7.5		62.5	58.5	54.5	50.5	46	41	35	28.5	21
6SR 36/6	5.5	7.5		75	70	65.5	60.5	55	49	42	34.5	25
6SR 36/7	7.5	10		87	82	76	70	64	57	49	40	29.5
6SR 36/9	9.2	12.5		112	105	98	91	83	74	63.5	51.5	37.5
6SR 36/11	11	15		137	128	120	111	101	90	77	63	46
6SR 36/13	13	17.5		162	152	142	131	119	106	91	74.5	54.5
6SR 36/15	15	20		187	175	163	151	138	123	105	86	63
6SR 36/18	18.5	25		224	210	196	181	165	147	127	103	75
6SR 36/22	22	30		274	257	239	221	202	180	155	126	92

Q = Flow rate **H** = Total manometric head

Performance curves comply with EN ISO 9906 Grade 3B tolerance limits.

CURVES AND PERFORMANCE DATA

50 Hz

6SR 44

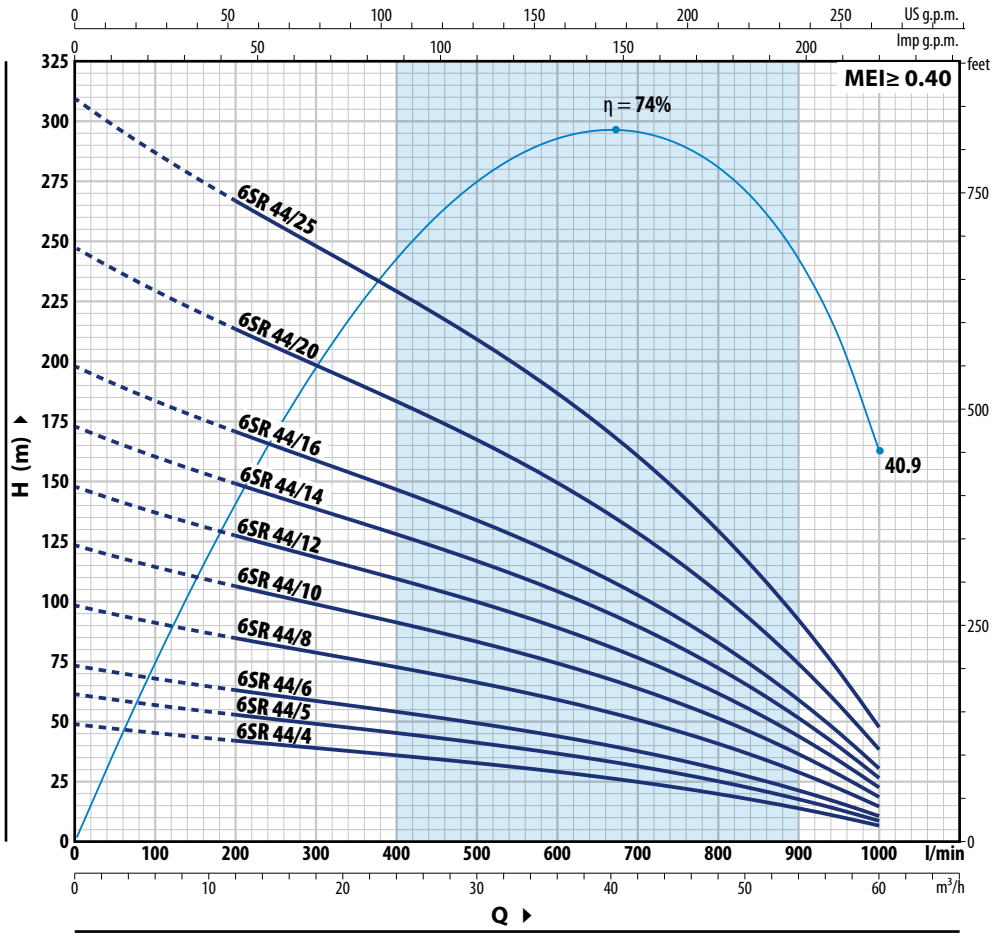

6SR 44

TYPE	POWER (P2)		Q m³/h	0	12	18	24	30	36	42	48	54	60
Three-phase	kW	HP	l/min	**0**	**200**	**300**	**400**	**500**	**600**	**700**	**800**	**900**	**1000**
6SR 44/4	4	5.5		49.5	43	40	37	33.5	30	25.8	21	15	8
6SR 44/5	5.5	7.5		62	53.5	49.5	46	42	37.5	32.5	26	18.7	10
6SR 44/6	7.5	10		74	64	59.5	55	50.5	45	38.5	31.5	22.4	11.5
6SR 44/8	9.2	12.5		99	86	80	74	67	60	51.5	41.5	30	15.5
6SR 44/10	11	15		124	107	99	92	84	75	64.5	52	37.5	19.5
6SR 44/12	13	17.5	**H** metres	149	128	119	110	101	90	77	62.5	45	23.5
6SR 44/14	15	20		174	150	139	129	118	105	90	73	52.5	27.5
6SR 44/16	18.5	25		198	171	159	147	134	120	103	83	59.5	31
6SR 44/20	22	30		248	214	199	184	168	150	129	104	75	39
6SR 44/25	30	40		310	267	249	230	210	188	161	130	93	49

Q = Flow rate **H** = Total manometric head

Performance curves comply with EN ISO 9906 Grade 3B tolerance limits.

EXAMPLES OF INSTALLATION

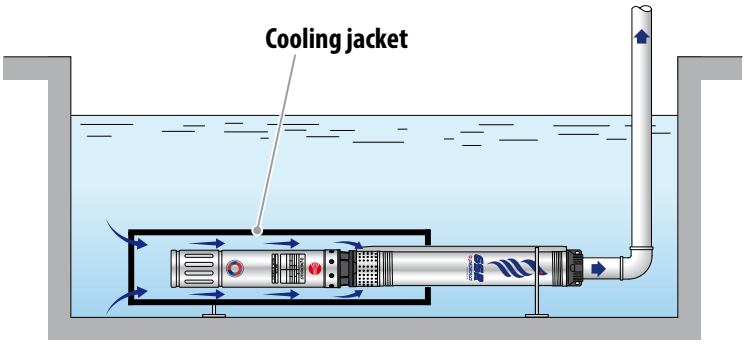

COOLING JACKET

※ When the pump is installed in reservoirs, rivers, or lakes, it requires an external cooling jacket (flow generator) to ensure sufficient water flow across the motor surface, preventing overheating.

※ The **6SR** pumps are suitable for wells with a minimum diameter of **6"** (**153 mm**).

※ The submersible pump must be lowered into the well through the delivery pipe to a depth that ensures it remains fully submerged, maintaining at least 50 cm or one metre from the bottom of the well, even if liquid levels decrease during operation.

※ It is advisable to secure the submersible pump using a stainless-steel cable connected to appropriate attachments on the delivery port.

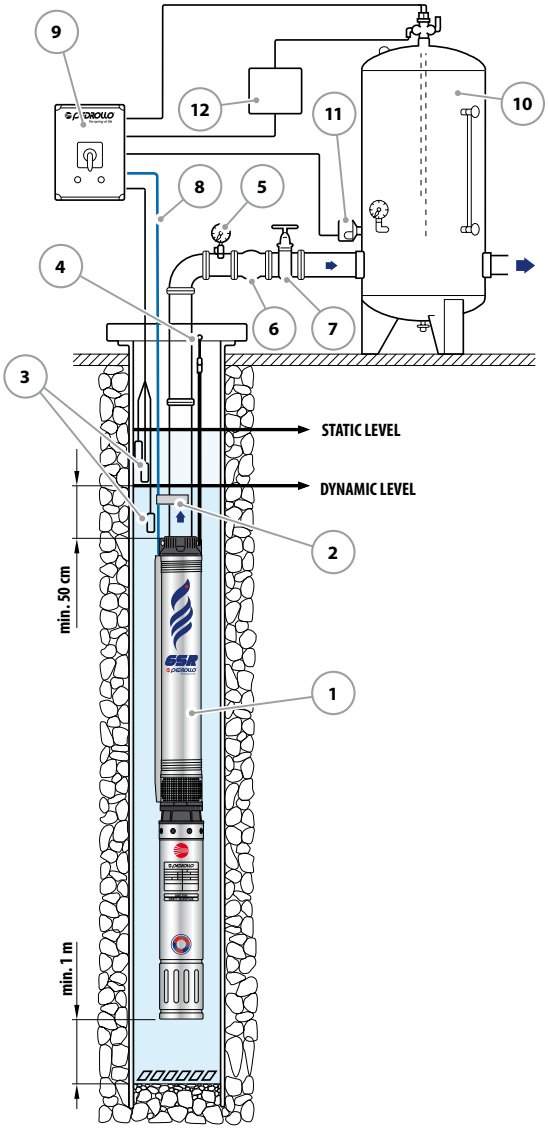

COMPONENTS

1) Submersible pump
2) Fixing Ties
3) Level control probes
4) Bracket and anchor cable
5) Pressure Gauge
6) Check valve
7) Flow control gate valve
8) Electrical power supply cable
9) Control panel
10) Autoclave tank
11) Pressure switch
12) Solenoid valve/electric compressor

MATERIALS AND COMPONENTS

1	**Delivery port**	Cast iron with cataphoresis treatment with thread according to ISO 228/1
2	**Check valve**	Stainless steel **AISI 304** stainless steel
3	**Motor bracket**	Cast iron with cataphoresis treatment sized to NEMA standards
4	**External sleeve**	**AISI 304** stainless steel
5	**Impellers**	Noryl™ and coated with special sand-resistant elastomer
6	**Diffusers**	Noryl™
7	**Diffuser boxes**	**AISI 304** stainless steel
8	**Pump shaft**	**AISI 304** stainless steel
9	**Pump bearings**	Made of **AISI 316L** stainless steel coated with chromium oxide to resist sand
10	**Tow coupling**	**AISI 420** stainless steel
11	**Filter**	**AISI 304** stainless steel
12	**Cable sheath**	**AISI 304** stainless steel
13	**Motor 6"**	※ **6PD = rewindable oil filled motor** ※ **6PSR = rewindable in water filled motor**

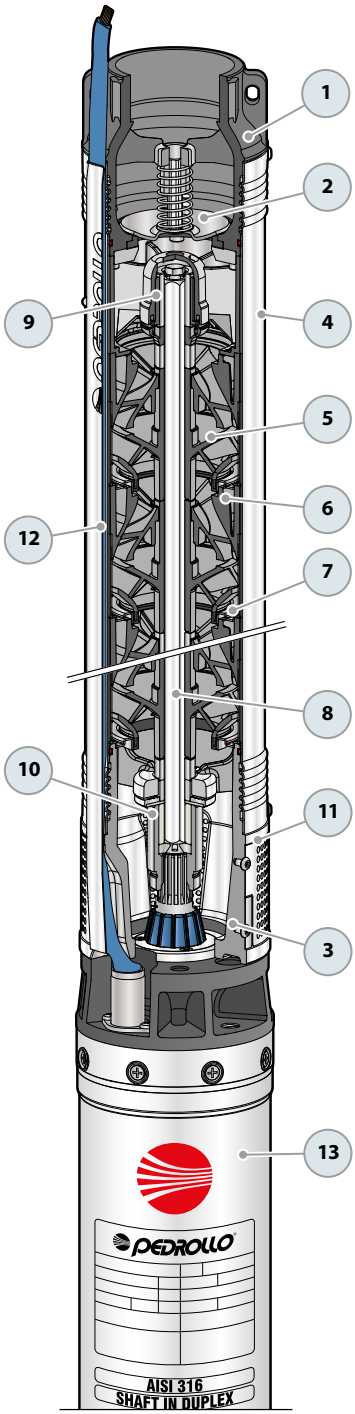

DIMENSIONS AND WEIGHT

TYPE Three-phase ※	DN	DIMENSIONS mm h1	h2	h3	kg	TYPE Three-phase ※	DN	DIMENSIONS mm h1	h2	h3	kg
6SR 12/8 - PD		714	595	1309	55.0	**6SR 12/8 - PSR**		714	620	1334	71.6
6SR 12/11 - PD		845	625	1470	58.3	**6SR 12/11 - PSR**		845	620	1465	73.9
6SR 12/15 - PD		1063	660	1723	67.8	**6SR 12/15 - PSR**		1063	670	1733	84.7
6SR 12/18 - PD		1193	700	1893	74.6	**6SR 12/18 - PSR**		1193	700	1893	91.0
6SR 12/21 - PD		1324	765	2089	83.6	**6SR 12/21 - PSR**		1324	750	2074	100.3
6SR 12/25 - PD		1497	820	2317	92.4	**6SR 12/25 - PSR**		1497	780	2277	106.4
6SR 12/28 - PD		1627	820	2447	94.8	**6SR 12/28 - PSR**		1627	840	2467	115.2
6SR 18/4 - PD		541	595	1136	50.5	**6SR 18/4 - PSR**		541	620	1161	67.1
6SR 18/6 - PD		628	625	1253	53.0	**6SR 18/6 - PSR**		628	620	1248	68.6
6SR 18/9 - PD		758	660	1418	60.4	**6SR 18/9 - PSR**		758	670	1428	77.3
6SR 18/11 - PD		845	700	1545	66.5	**6SR 18/11 - PSR**		845	700	1545	82.9
6SR 18/13 - PD		976	765	1741	76.4	**6SR 18/13 - PSR**		976	750	1726	93.1
6SR 18/15 - PD		1063	820	1883	83.6	**6SR 18/15 - PSR**		1063	780	1843	97.6
6SR 18/18 - PD	**3"**	1193	820	2013	85.9	**6SR 18/18 - PSR**	**3"**	1193	840	2033	106.3
6SR 18/22 - PD		1367	883	2250	98.8	**6SR 18/22 - PSR**		1367	890	2257	116.4
6SR 18/26 - PD		1541	953	2494	109.1	**6SR 18/26 - PSR**		1541	975	2516	130.5
6SR 27/4 - PD		579	595	1174	51.0	**6SR 27/4 - PSR**		579	620	1199	67.6
6SR 27/5 - PD		632	625	1257	52.9	**6SR 27/5 - PSR**		632	620	1252	68.5
6SR 27/7 - PD		738	660	1398	59.8	**6SR 27/7 - PSR**		738	670	1408	76.7
6SR 27/8 - PD		790	700	1490	65.2	**6SR 27/8 - PSR**		790	700	1490	81.6
6SR 27/10 - PD		896	765	1661	72.6	**6SR 27/10 - PSR**		896	750	1646	89.3
6SR 27/12 - PD		1047	820	1867	82.8	**6SR 27/12 - PSR**		1047	780	1827	96.8
6SR 27/14 - PD		1153	820	1973	84.5	**6SR 27/14 - PSR**		1153	840	1993	104.9
6SR 27/17 - PD		1311	883	2194	97.0	**6SR 27/17 - PSR**		1311	890	2201	114.6
6SR 27/20 - PD		1470	953	2423	106.9	**6SR 27/20 - PSR**		1470	975	2445	127.3
6SR 27/27 - PD		1840	1098	2938	130.1	**6SR 27/27 - PSR**		1840	1215	3055	165.9

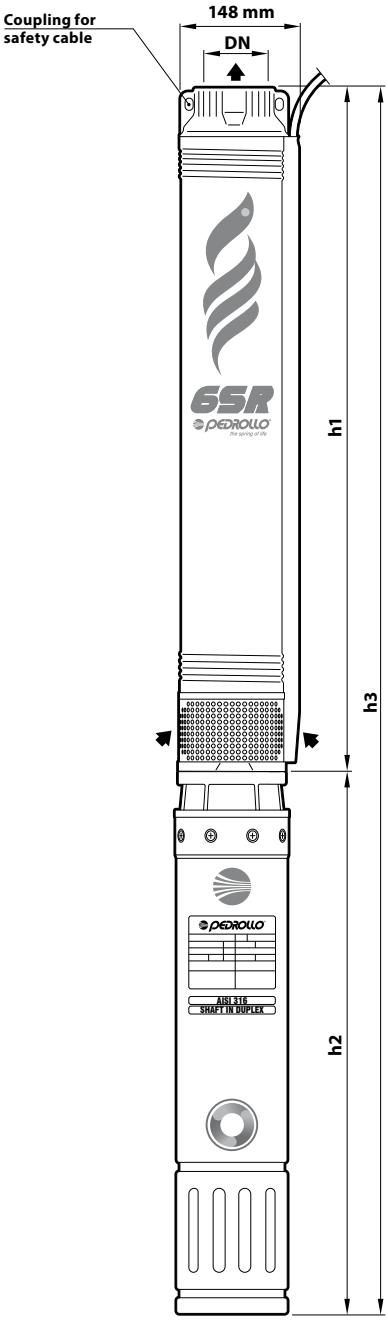

※ 6PD = rewindable oil filled motor

※ 6PSR = rewindable water filled motor

DIMENSIONS AND WEIGHT

TYPE Three-phase ※	DN	DIMENSIONS mm h1	h2	h3	kg	TYPE Three-phase ※	DN	DIMENSIONS mm h1	h2	h3	kg
6SR 36/4 - PD		761	595	1356	54.9	**6SR 36/4 - PSR**		761	620	1381	71.5
6SR 36/5 - PD		859	625	1484	57.6	**6SR 36/5 - PSR**		859	620	1479	73.2
6SR 36/6 - PD		958	625	1583	59.1	**6SR 36/6 - PSR**		958	620	1578	74.7
6SR 36/7 - PD		1056	660	1716	66.3	**6SR 36/7 - PSR**		1056	670	1726	83.2
6SR 36/9 - PD		1253	700	1953	73.9	**6SR 36/9 - PSR**		1253	700	1953	90.3
6SR 36/11 - PD		1450	765	2215	83.8	**6SR 36/11 - PSR**		1450	750	2200	100.5
6SR 36/13 - PD		1646	820	2466	92.5	**6SR 36/13 - PSR**		1646	780	2426	106.5
6SR 36/15 - PD		1843	820	2663	96.7	**6SR 36/15 - PSR**		1843	840	2683	117.1
6SR 36/18 - PD		2138	883	3021	109.1	**6SR 36/18 - PSR**		2138	890	3028	126.7
6SR 36/22 - PD		2532	953	3485	123.5	**6SR 36/22 - PSR**		2532	975	3507	143.9
6SR 44/04 - PD	**3"**	761	595	1356	54.9	**6SR 44/04 - PSR**	**3"**	761	620	1381	71.5
6SR 44/05 - PD		859	625	1484	57.6	**6SR 44/05 - PSR**		859	620	1479	73.2
6SR 44/06 - PD		958	660	1618	62.8	**6SR 44/06 - PSR**		958	670	1628	79.7
6SR 44/08 - PD		1154	700	1854	72.4	**6SR 44/08 - PSR**		1154	700	1854	88.8
6SR 44/10 - PD		1351	765	2116	82.1	**6SR 44/10 - PSR**		1351	750	2101	98.8
6SR 44/12 - PD		1548	820	2368	91.0	**6SR 44/12 - PSR**		1548	780	2328	105.0
6SR 44/14 - PD		1745	820	2565	95.1	**6SR 44/14 - PSR**		1745	840	2585	115.5
6SR 44/16 - PD		1942	883	2825	107.0	**6SR 44/16 - PSR**		1942	890	2832	124.6
6SR 44/20 - PD		2335	953	3288	119.5	**6SR 44/20 - PSR**		2335	975	3310	139.9
6SR 44/25 - PD		2827	1098	3925	144.2	**6SR 44/25 - PSR**		2827	1215	4042	175.2

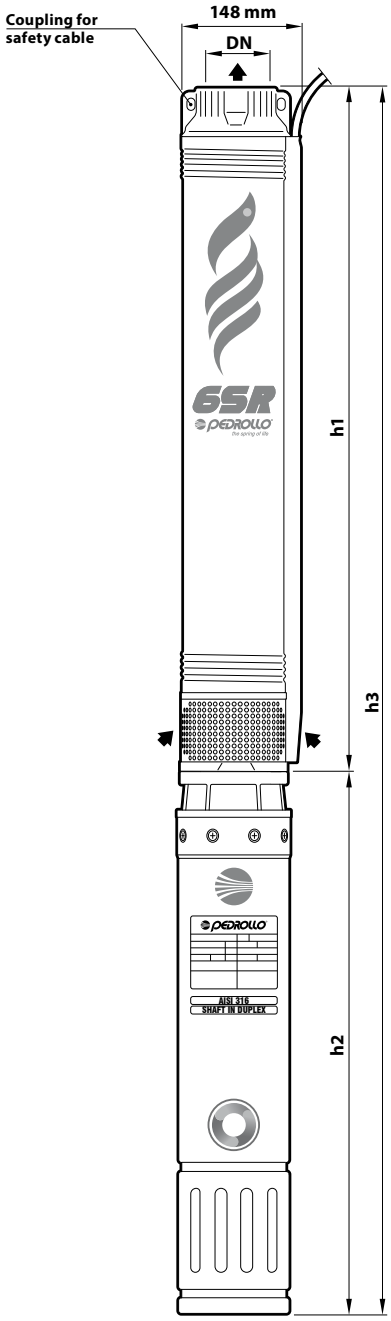

※ 6PD = rewindable oil filled motor

※ 6PSR = rewindable water filled motor

6ST 6" stainless steel submersible pumps

Clean water
Agricultural use
Civil use
Industrial use

※ For reliable performance in tough conditions, our stainless steel pumps, such as the 6ST series, are recommended for their high quality, ensuring a long service life with exceptional mechanical strength and corrosion resistance.

PERFORMANCE RANGE

- Flow rate up to **1300 l/min** (78 m³/h)
- Head up to **490 m**

INSTALLATION AND USE

Experience exceptional energy savings with our completely stainless steel 6" submersible borehole pumps, the **6ST** series. Engineered with optimized diffuser and impeller geometry, they deliver unmatched efficiency.

Designed to transfer clean water with sand content up to **100 g/m³.** Highly efficient and reliable, they are suitable for **industrial, civil, and agricultural applications**, such as water distribution coupled with pressure tanks, irrigation, pressure boosting, fire-fighting systems, and more.

INCLUDES

※ Three-phase electric motor 400 V - 50 Hz The pump can be supplied with motor:
- **6PD** rewindable and oil filled
- **6PSR** rewindable and water filled

※ **4 m** power cable

APPLICATION LIMITS

- Liquid temperature up to **+35 °C**
- Sand content max. **100 g/m³**
- Maximum operating depth below water level:
  - **200 m** with 6PD motors
  - **150 m** with 6PSR motors
- Vertical operation
- Starts per hour: **20** at regular intervals
- Minimum cooling flow **8 cm/s**
- Continuous running duty **S1**

AVAILABLE UPON REQUEST

※ 6ST pumps with double cable cover for coupling with 400/690 V ⅄/Δ dual voltage motors (star/delta)

※ Other voltages

PERFORMANCE RANGE

50 Hz

6ST 17

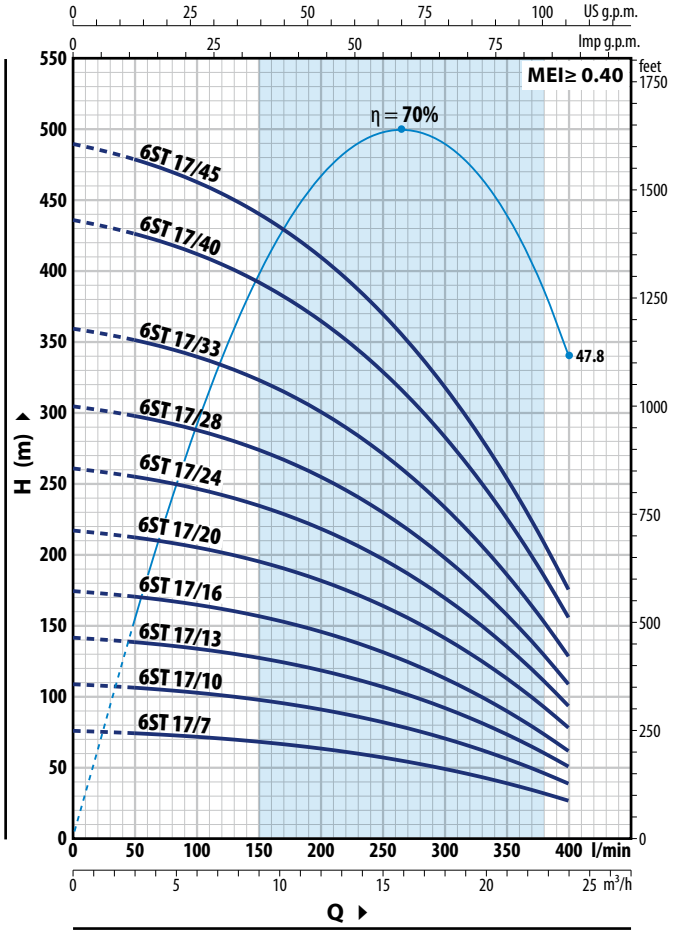

6ST 30

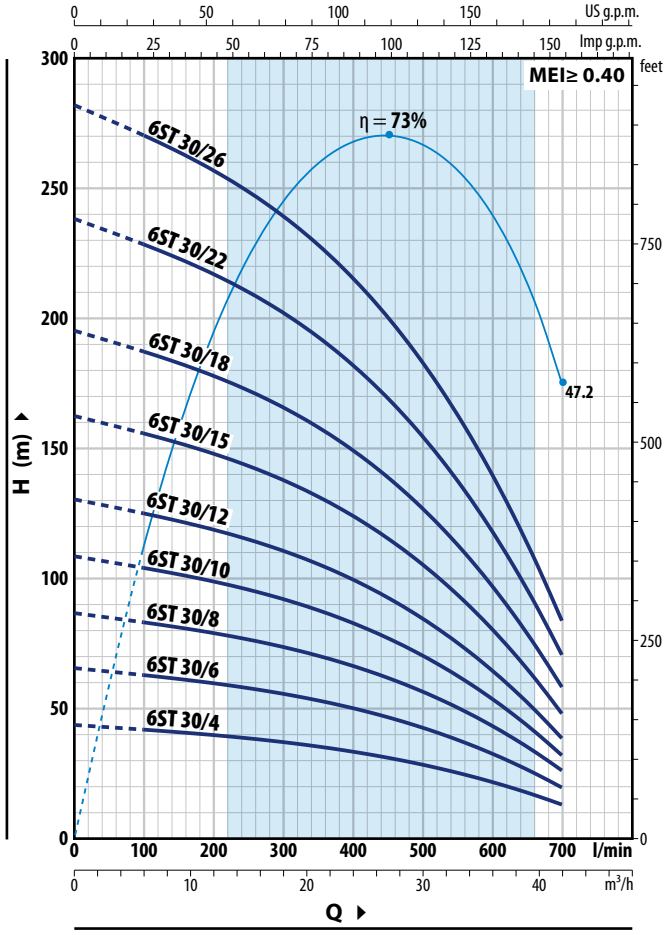

6ST 17

TYPE	POWER (P2)		Q m³/h	0	3	6	9	12	15	18	21	24
Three-phase	**kW**	**HP**	l/min	**0**	**50**	**100**	**150**	**200**	**250**	**300**	**350**	**400**
6ST 17/7	4	5.5		76	75	72	68.5	64	57.5	49.5	39.5	27.5
6ST 17/10	5.5	7.5		109	107	103	98	91	82	71	56.5	39
6ST 17/13	7.5	10		142	139	134	127	119	107	92	73	50.5
6ST 17/16	9.2	12.5		174	170	165	157	146	132	113	90	62.5
6ST 17/20	11	15		218	213	206	196	182	165	142	113	78
6ST 17/24	13	17.5	**H** metres	262	256	247	235	219	198	170	136	94
6ST 17/28	15	20		305	298	288	274	255	230	198	158	109
6ST 17/33	18.5	25		360	352	340	323	301	272	234	187	129
6ST 17/40	22	30		436	426	412	392	365	329	283	226	156
6ST 17/45 (1)	26	35		490	479	464	441	411	370	319	254	175

6ST 30

TYPE	POWER (P2)		Q m³/h	0	6	12	18	24	30	36	42
Three-phase	**kW**	**HP**	l/min	**0**	**100**	**200**	**300**	**400**	**500**	**600**	**700**
6ST 30/4	4	5.5		43.5	41.5	39.5	37	33	28	21.5	13
6ST 30/6	5.5	7.5		65	62.5	59.5	55	49.5	42	32.5	19.5
6ST 30/8	7.5	10		87	83	79	74	66.5	56.5	43	25.5
6ST 30/10	9.2	12.5		108	104	99	92	83	70	54	32
6ST 30/12	11	15	**H** metres	130	125	119	110	99	84	64.5	38.5
6ST 30/15	13	17.5		163	156	148	138	124	106	81	48
6ST 30/18	15	20		195	187	178	166	149	127	97	58
6ST 30/22	18.5	25		239	229	217	202	182	155	118	71
6ST 30/26	22	30		282	270	257	239	215	183	140	84

Q = Flow rate **H** = Total manometric head

Performance curves comply with EN ISO 9906 Grade 3B tolerance limits.

(1) For pumps equipped with 6PD motor: 40 HP motor

PERFORMANCE RANGE

50 Hz

6ST 46

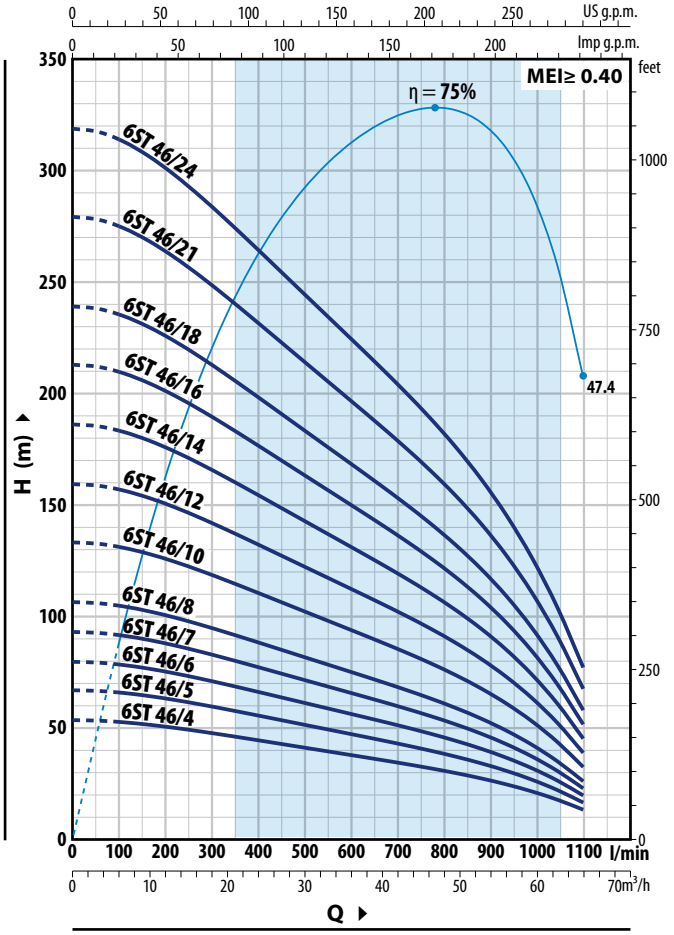

6ST 60

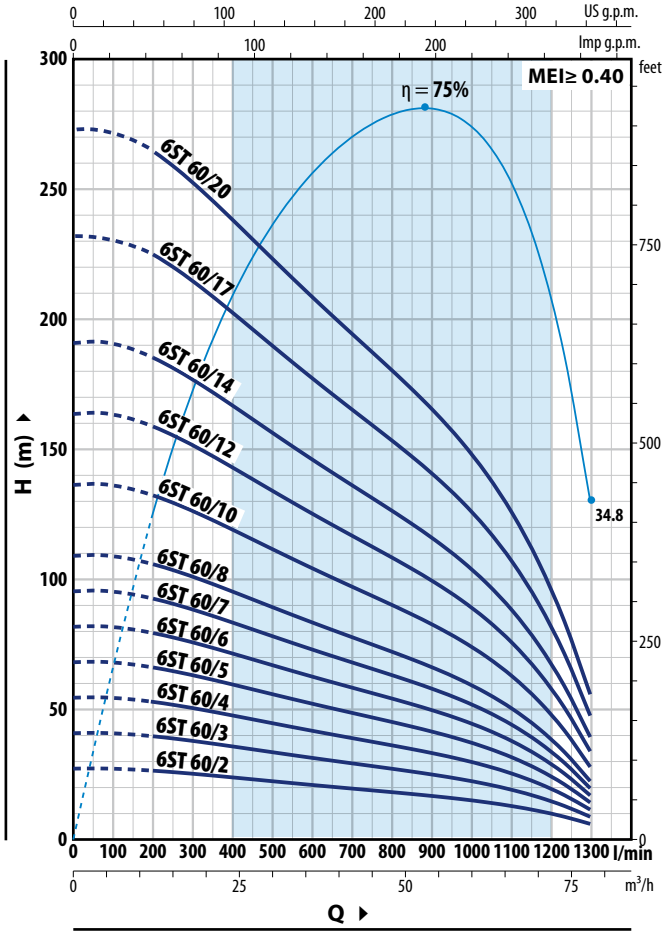

6ST 46

TYPE	POWER(P2)		Q m³/h	0	6	12	18	24	30	36	42	48	54	60	66
Three-phase	kW	HP	Q l/min	**0**	**100**	**200**	**300**	**400**	**500**	**600**	**700**	**800**	**900**	**1000**	**1100**
6ST 46/4	5.5	7.5	H metres	53	52.5	50.5	47.5	44	41	37.5	34	30.5	26	20.4	13
6ST 46/5	7.5	10		66.5	65.5	63	59	55	51	47	42.5	38	32.5	25.5	16
6ST 46/6	9.2	12.5		80	79	75	71	66	61	56	51	45.5	39	30.5	19.5
6ST 46/7	11	15		93	92	88	83	77	71	65.5	59.5	53	45.5	36	22.5
6ST 46/8	13	17.5		106	105	101	95	88	82	75	68	61	52	41	26
6ST 46/10	15	20		133	131	126	118	110	102	94	85	76	65	51	32
6ST 46/12	18.5	25		160	157	151	142	132	122	112	102	91	78	61.5	38.5
6ST 46/14	22	30		186	183	176	166	154	143	131	119	106	91	72	45
6ST 46/16	22	30		213	210	201	189	177	163	150	136	122	104	82	51.5
6ST 46/18 (1)	26	35		239	236	226	213	199	184	169	153	137	117	92	58
6ST 46/21	30	40		279	275	264	249	232	214	197	179	160	137	107	67.5
6ST 46/24	37	50		319	314	302	284	265	245	225	205	182	156	123	77

6ST 60

TYPE	POWER(P2)		Q m³/h	0	12	18	24	30	36	48	60	72	78
Three-phase	kW	HP	Q l/min	**0**	**200**	**300**	**400**	**500**	**600**	**800**	**1000**	**1200**	**1300**
6ST 60/2	4	5.5	H metres	27.5	26.5	25.3	24	22.4	21	18	15	9.7	5.5
6ST 60/3	5.5	7.5		41	39.5	38	36	33.5	31.5	27	22.3	14.5	8.5
6ST 60/4	7.5	10		54.5	53	50.5	47.5	44.5	42	36	29.5	19.4	11
6ST 60/5	9.2	12.5		68.5	66	63	59.5	56	52.5	45	37	24.2	14
6ST 60/6	11	15		82	79	76	72	67	62.5	54.5	44.5	29	17
6ST 60/7	13	17.5		96	93	89	84	78	73	63.5	52	34	19.5
6ST 60/8	15	20		109	106	101	95	89	84	72.5	59.5	39	22.5
6ST 60/10	18.5	25		137	132	126	119	112	105	90	74	48.5	28
6ST 60/12	22	30		164	159	152	143	134	125	109	89	58	33.5
6ST 60/14 (1)	26	35		191	185	177	167	157	146	127	104	68	39
6ST 60/17	30	40		232	225	215	203	190	178	154	126	82	47.5
6ST 60/20	37	50		273	265	253	239	224	209	181	149	97	56

(1) For pumps equipped with 6PD motor: 40 HP motor

MATERIALS AND COMPONENTS

1	**Delivery port**	**AISI 304** stainless steel with thread according to ISO 228/1
2	**Check valve**	Stainless steel **AISI 304**
3	**Motor bracket**	Stainless steel **AISI 304**
4	**Impellers**	Stainless steel **AISI 304**
5	**Diffusers**	Stainless steel **AISI 304**
6	**Pump shaft**	Stainless steel **AISI 304**
7	**Pump bearings**	Special elastomer
8	**Wear rings**	Special elastomer
9	**Tow coupling**	Stainless steel **AISI 304**
10	**Filter**	Stainless steel **AISI 304**
11	**Cable sheath**	Stainless steel **AISI 304**
12	**Motor 6"**	**※ 6PD = rewindable oil filled motor** **※ 6PSR = rewindable oil water motor**

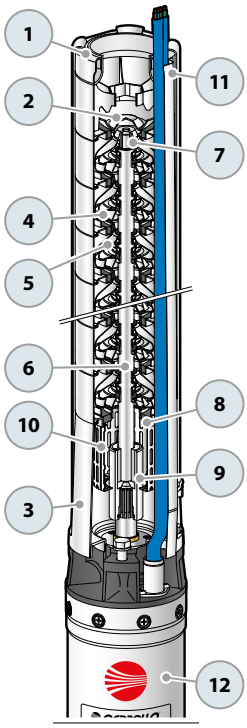

DIMENSIONS AND WEIGHT

TYPE Three-phase ※	DN	DIMENSIONS mm h1	h2	h3	kg	TYPE Three-phase ※	DN	DIMENSIONS mm h1	h2	h3	kg
6ST 17/7 - PD		695	595	1290	48.8	**6ST 17/7 - PSR**		695	620	1315	66.7
6ST 17/10 - PD		876	625	1501	55.3	**6ST 17/10 - PSR**		876	620	1496	70.3
6ST 17/13 - PD		1058	660	1718	63.3	**6ST 17/13 - PSR**		1058	670	1728	81.0
6ST 17/16 - PD		1239	700	1939	69.4	**6ST 17/16 - PSR**		1239	700	1939	88.6
6ST 17/20 - PD		1481	765	2246	79.2	**6ST 17/20 - PSR**		1481	750	2231	100.4
6ST 17/24 - PD		1723	820	2543	95.0	**6ST 17/24 - PSR**		1723	780	2503	108.2
6ST 17/28 - PD		1965	820	2785	99.8	**6ST 17/28 - PSR**		1965	840	2805	120.4
6ST 17/33 - PD		2268	883	3151	117.4	**6ST 17/33 - PSR**		2268	890	3158	136.9
6ST 17/40 - PD		2691	953	3644	132.3	**6ST 17/40 - PSR**		2691	975	3666	156.3
6ST 17/45 - PD		2994	1098	4092	154.3	**6ST 17/45 - PSR**		2994	1075	4069	172.3
6ST 30/4 - PD		655	595	1250	46.2	**6ST 30/4 - PSR**		655	620	1275	65.5
6ST 30/6 - PD		847	625	1472	54.2	**6ST 30/6 - PSR**		847	620	1467	69.2
6ST 30/8 - PD		1039	660	1699	62.1	**6ST 30/8 - PSR**		1039	670	1709	79.8
6ST 30/10 - PD		1231	700	1931	68.2	**6ST 30/10 - PSR**		1231	700	1931	87.4
6ST 30/12 - PD		1423	765	2188	76.8	**6ST 30/12 - PSR**		1423	750	2173	98.0
6ST 30/15 - PD		1711	820	2531	93.2	**6ST 30/15 - PSR**		1711	780	2491	106.4
6ST 30/18 - PD		1999	820	2819	98.7	**6ST 30/18 - PSR**		1999	840	2839	119.3
6ST 30/22 - PD		2383	883	3266	117.0	**6ST 30/22 - PSR**		2383	890	3273	137.0
6ST 30/26 - PD		2767	953	3720	131.0	**6ST 30/26 - PSR**		2767	975	3742	155.1
6ST 46/4 - PD		723	625	1348	52.1	**6ST 46/4 - PSR**		723	620	1343	67.1
6ST 46/5 - PD		836	660	1496	56.6	**6ST 46/5 - PSR**		836	670	1506	74.3
6ST 46/6 - PD	**3"**	949	700	1649	61.3	**6ST 46/6 - PSR**	**3"**	949	700	1649	80.4
6ST 46/7 - PD		1062	765	1827	69.4	**6ST 46/7 - PSR**		1062	750	1812	90.6
6ST 46/8 - PD		1175	820	1995	81.6	**6ST 46/8 - PSR**		1175	780	1955	95.8
6ST 46/10 - PD		1401	820	2221	87.0	**6ST 46/10 - PSR**		1401	840	2241	107.6
6ST 46/12 - PD		1627	883	2510	102.9	**6ST 46/12 - PSR**		1627	890	2517	119.0
6ST 46/14 - PD		1853	953	2806	112.8	**6ST 46/14 - PSR**		1853	975	2828	133.4
6ST 46/16 - PD		2079	953	3032	118.2	**6ST 46/16 - PSR**		2079	975	3054	142.2
6ST 46/18 - PD		2305	1098	3403	138.6	**6ST 46/18 - PSR**		2305	1075	3380	156.6
6ST 46/21 - PD		2644	1098	3742	146.1	**6ST 46/21 - PSR**		2644	1215	3859	182.1
6ST 46/24 - PD		2983	1233	4216	162.7	**6ST 46/24 - PSR**		2983	1295	4278	198.7
6ST 60/2 - PD		497	595	1092	43.4	**6ST 60/2 - PSR**		497	620	1117	61.3
6ST 60/3 - PD		610	625	1235	48.5	**6ST 60/3 - PSR**		610	620	1230	63.5
6ST 60/4 - PD		723	660	1383	54.4	**6ST 60/4 - PSR**		723	670	1393	72.1
6ST 60/5 - PD		836	700	1536	59.1	**6ST 60/5 - PSR**		836	700	1536	78.3
6ST 60/6 - PD		949	765	1714	67.3	**6ST 60/6 - PSR**		949	750	1699	88.4
6ST 60/7 - PD		1062	820	1882	79.4	**6ST 60/7 - PSR**		1062	780	1842	93.6
6ST 60/8 - PD		1175	820	1995	81.6	**6ST 60/8 - PSR**		1175	840	2015	102.2
6ST 60/10 - PD		1401	883	2284	97.5	**6ST 60/10 - PSR**		1401	890	2291	113.6
6ST 60/12 - PD		1627	953	2580	108.4	**6ST 60/12 - PSR**		1627	975	2602	129.0
6ST 60/14 - PD		1853	1098	2951	128.8	**6ST 60/14 - PSR**		1853	1075	2928	143.4
6ST 60/17 - PD		2192	1098	3290	137.4	**6ST 60/17 - PSR**		2192	1215	3407	172.4
6ST 60/20 - PD		2531	1233	3764	153.9	**6ST 60/20 - PSR**		2531	1295	3826	189.9

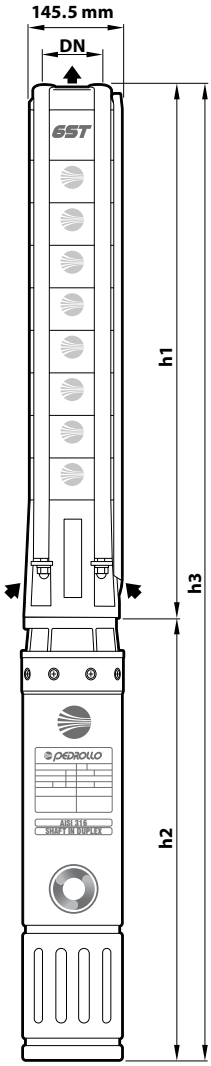

※ 6PD = rewindable submersible oil filled motor

※ 6PSR = rewindable submersible water filled motor

4HR 4" submersible pumps in micro-cast stainless steel

Clean water
Agricultural use
Civil use
Industrial use

※ Featuring high mechanical resistance against both sand abrasion and corrosion, even in marine environments or brackish water installations, the 4HR pump is the ideal choice when durability and quality are paramount.

PERFORMANCE RANGE

- Flow rate up to **420 l/min** (25.2 m³/h)
- Head up to **176 m**

INSTALLATION AND USE

Submersible pump designed for 4" wells, constructed with durable micro-cast stainless steel.

Designed to transfer clean or brackish water with sand content up to 100 g/m³. Highly efficient and reliable, they are suitable for industrial, civil, and agricultural applications, such as water distribution coupled with pressure tanks, irrigation, pressure boosting, fire-fighting systems, and more.

INCLUDES

※ Electric motor
- Single-phase 230 V - 50 Hz
- Three-phase 400 V - 50 Hz

The pump can be supplied with a motor:
- **4PD** rewindable and oil filled
- **4PS** encapsulated and water filled

※ Power cable from:
- **2 m** for power ratings from 0.37 to 2.2 kW
- **3.6 m** for power ratings from 3 to 7.5 kW.

APPLICATION LIMITS

- Liquid temperature up to **+40 °C**
- Sand content max. **100 g/m³**
- Maximum operating depth below water level:
  - **200 m** with 4PD motors
  - **300 m** with 4PS motors
- Operation:
  - in vertical position
  - horizontally up to **12 stages**
- Starts per hour: **20** at regular intervals
- Minimum motor cooling flow **8 cm/s**
- Continuous running duty **S1**

AVAILABLE UPON REQUEST

※ Different voltage requirements 60 Hz frequency

PATENTS - TRADE MARKS - MODELS

- Registered Community Model No. 004128619-0001

PERFORMANCE RANGE

50 Hz

4HR 10

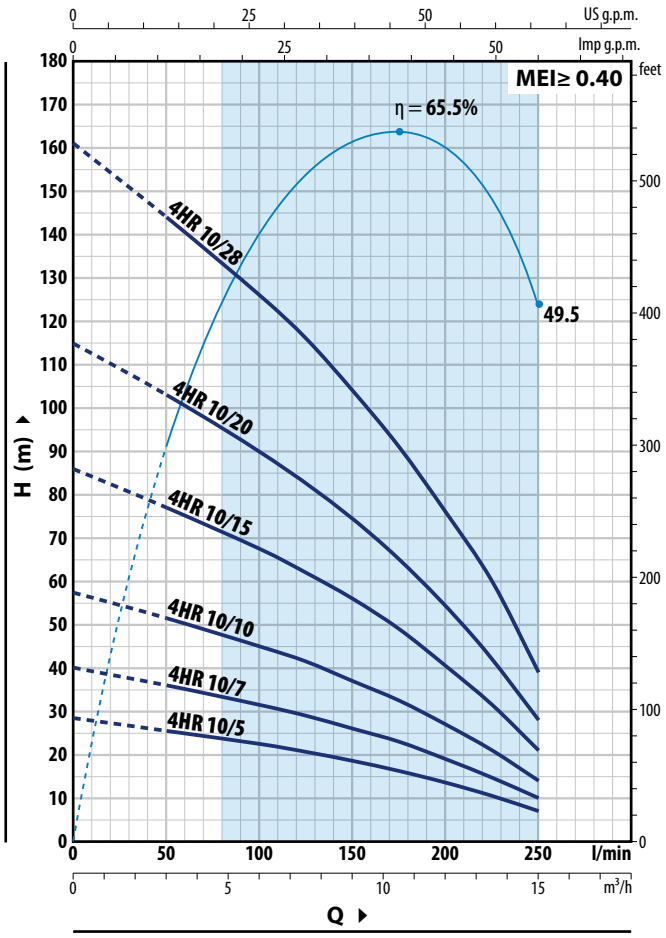

4HR 14

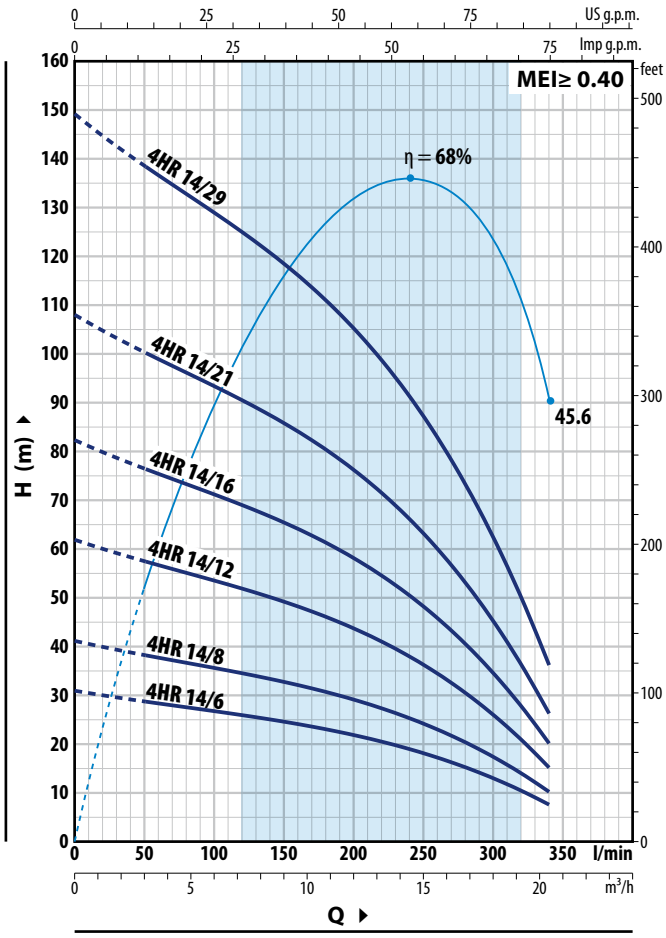

4HR 10

TYPE		POWER (P2)		Q	m³/h	0	3.0	6.0	7.5	9.0	10.5	12.0	13.5	15.0
Single-phase	Three-phase	kW	HP		l/min	**0**	**50**	**100**	**125**	**150**	**175**	**200**	**225**	**250**
4HRm 10/5	**4HR 10/5**	0.75	1	H	metres	28.5	25.5	22.5	20.7	18.6	16.3	13.6	10.5	7
4HRm 10/7	**4HR 10/7**	1.1	1.5			40	36	31.5	29	26	23	19	14.7	10
4HRm 10/10	**4HR 10/10**	1.5	2			57.5	51.5	45	41.5	37	32.5	27	21	14
4HRm 10/15	**4HR 10/15**	2.2	3			86	77	67.5	62	56	49	40.5	31.5	21
–	**4HR 10/20**	3	4			115	103	90	83	74	65	54.5	42	28
–	**4HR 10/28**	4	5.5			161	144	126	116	104	91	76	60	39

4HR 14

TYPE		POWER (P2)		Q	m³/h	0	3.0	6.0	9.0	12.0	15.0	18.0	19.2	20.4
Single-phase	Three-phase	kW	HP		l/min	**0**	**50**	**100**	**150**	**200**	**250**	**300**	**320**	**340**
4HRm 14/6	**4HR 14/6**	1.1	1.5	H	metres	31	28.5	26.7	24.5	21.8	18	13	10.4	7.5
4HRm 14/8	**4HR 14/8**	1.5	2			41	38.5	35.5	32.5	29	24	17.2	13.8	10
4HRm 14/12	**4HR 14/12**	2.2	3			62	57.5	53.5	49	43.5	36	25.8	20.7	15
–	**4HR 14/16**	3	4			82	77	71	65.5	58	48	34.5	27.5	20
–	**4HR 14/21**	4	5.5			108	100	93	86	76	63	45	36.5	26.5
–	**4HR 14/29**	5.5	7.5			149	139	129	119	105	87	62.5	50	36.5

Q = Flow rate **H** = Total manometric head

Performance curves comply with EN ISO 9906 Grade 3B tolerance limits.

PERFORMANCE RANGE

50 Hz

4HR 18

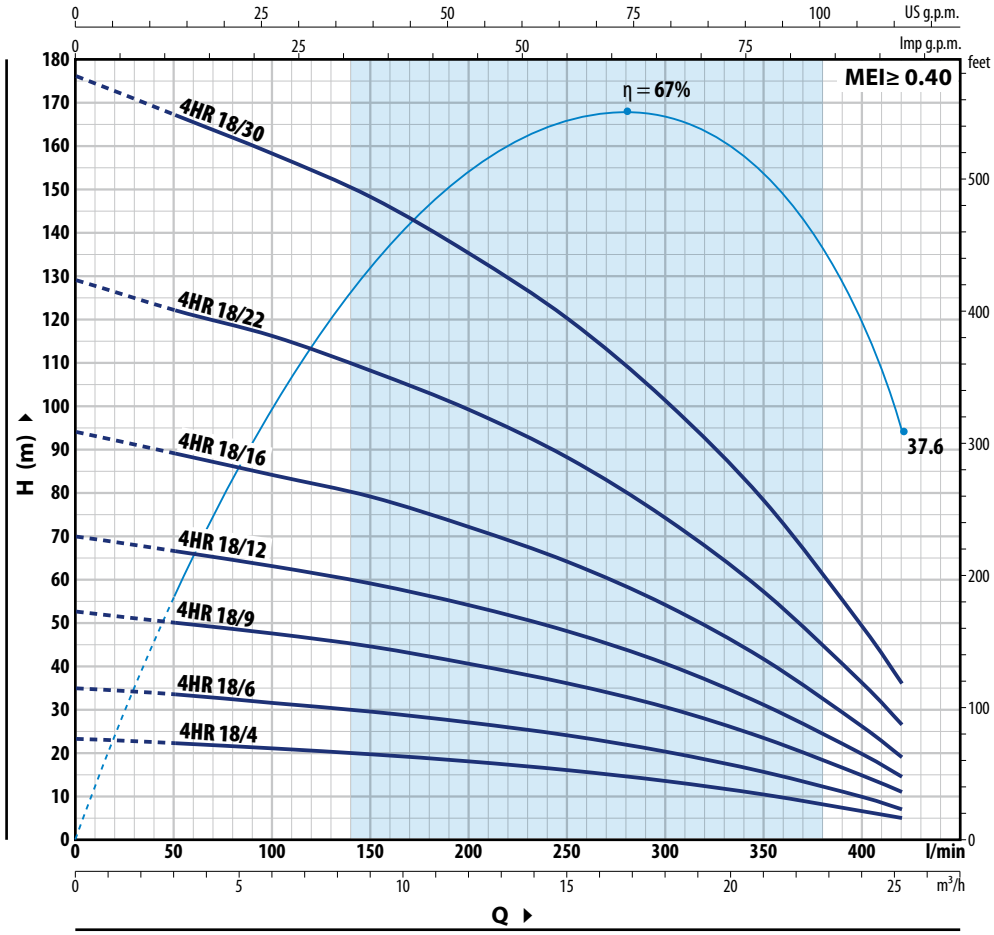

4HR 18

TYPE		POWER (P2)		Q	m³/h	0	3.0	6.0	9.0	12.0	15.0	18.0	21.0	24.0	25.2
Single-phase	**Three-phase**	**kW**	**HP**		l/min	**0**	**50**	**100**	**150**	**200**	**250**	**300**	**350**	**400**	**420**
4HRm 18/4	**4HR 18/4**	1.1	1.5			23.4	22	21	19.7	18	16	13.5	10.4	6.6	5
4HRm 18/6	**4HR 18/6**	1.5	2			35	33.5	31.5	29.5	27	24	20.3	15.6	9.8	7
4HRm 18/9	**4HR 18/9**	2.2	3			52.5	50	47.5	44.5	40.5	36	30.5	23.4	14.8	11
–	**4HR 18/12**	3	4	**H**	metres	70	66.5	63	59	54	48	40.5	31	19.7	14.5
–	**4HR 18/16**	4	5.5			94	89	84	79	72	64	54	41.5	26	19
–	**4HR 18/22**	5.5	7.5			129	122	116	108	99	88	74	57	36	26.5
–	**4HR 18/30**	7.5	10			176	167	158	148	135	120	101	78	49	36

Q = Flow rate **H** = Total manometric head

Performance curves comply with EN ISO 9906 Grade 3B tolerance limits.

MATERIALS AND COMPONENTS

1	**Delivery port**	Micro-cast **AISI 304** stainless steel with thread according to ISO 228/1
2	**Check valve**	Stainless steel **AISI 304**
3	**Motor bracket**	**AISI 304** micro-cast stainless steel sized to NEMA standards
4	**Impellers**	**AISI 304** micro-cast stainless steel
5	**Diffusers**	**AISI 304** micro-cast stainless steel
6	**Pump shaft**	Stainless steel **AISI 304**
7	**Pump bearings**	Special elastomer
8	**Wear rings**	Special elastomer
9	**Tow coupling**	Stainless steel **AISI 304**
10	**Filter**	Stainless steel **AISI 304**
11	**Cable sheath**	Stainless steel **AISI 304**
12	**Motor 4"**	**※ 4PD = rewindable oil filled motor** **※ 4PS = encapsulated water filled motor**

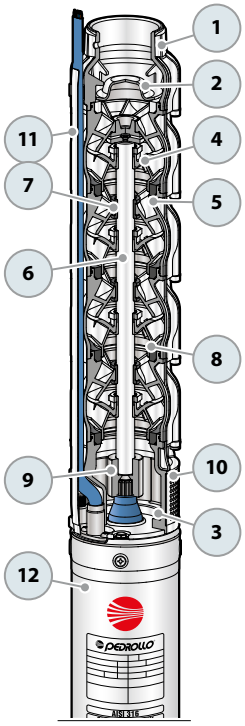

DIMENSIONS AND WEIGHT

TYPE Single-phase ※	DN	DIMENSIONS mm h1	h2	h3	kg	TYPE Single-phase ※	DN	DIMENSIONS mm h1	h2	h3	kg
4HRm 10/5 - PD		511	356	867	19.0	**4HRm 10/5 - PS**		511	272	783	20.3
4HRm 10/7 - PD		657	396	1053	22.5	**4HRm 10/7 - PS**		657	312	969	24.8
4HRm 10/10 - PD		876	437	1313	29.0	**4HRm 10/10 - PS**		876	352	1228	32.7
4HRm 10/15 - PD		1241	492	1733	39.2	**4HRm 10/15 - PS**		1241	402	1643	38.0
4HRm 14/6 - PD	**2"**	584	396	980	20.5	**4HRm 14/6 - PS**	**2"**	584	312	896	22.0
4HRm 14/8 - PD		730	437	1167	25.0	**4HRm 14/8 - PS**		730	352	1082	26.9
4HRm 14/12 - PD		1022	492	1514	33.5	**4HRm 14/12 - PS**		1022	402	1424	33.0
4HRm 18/4 - PD		438	396	834	18.1	**4HRm 18/4 - PS**		438	312	750	19.4
4HRm 18/6 - PD		584	437	1021	22.8	**4HRm 18/6 - PS**		584	352	936	24.3
4HRm 18/9 - PD		803	492	1295	29.5	**4HRm 18/9 - PS**		803	402	1205	29.1

TYPE Three-phase ※	DN	DIMENSIONS mm h1	h2	h3	kg	TYPE Three-phase ※	DN	DIMENSIONS mm h1	h2	h3	kg
4HR 10/5 - PD		511	356	867	18.0	**4HR 10/5 - PS**		511	257	768	18.3
4HR 10/7 - PD		657	371	1028	22.0	**4HR 10/7 - PS**		657	272	929	22.0
4HR 10/10 - PD		876	396	1272	26.8	**4HR 10/10 - PS**		876	297	1173	26.4
4HR 10/15 - PD		1241	437	1678	37.0	**4HR 10/15 - PS**		1241	352	1593	38.7
4HR 10/20 - PD		1606	450	2056	45.0	**4HR 10/20 - PS**		1606	484	2090	49.2
4HR 10/28 - PD		2190	625	2815	61.8	**4HR 10/28 - PS**		2190	574	2764	65.1
4HR 14/6 - PD		584	371	955	20.0	**4HR 14/6 - PS**		584	272	856	18.6
4HR 14/8 - PD		730	396	1126	23.2	**4HR 14/8 - PS**		730	297	1027	24.2
4HR 14/12 - PD		1022	437	1459	30.4	**4HR 14/12 - PS**		1022	352	1374	32.1
4HR 14/16 - PD	**2"**	1314	450	1764	36.8	**4HR 14/16 - PS**	**2"**	1314	484	1798	40.6
4HR 14/21 - PD		1679	625	2304	50.2	**4HR 14/21 - PS**		1679	574	2253	53.5
4HR 14/29 - PD		2263	725	2988	68.2	**4HR 14/29 - PS**		2263	664	2927	68.6
4HR 18/4 - PD		438	371	809	17.0	**4HR 18/4 - PS**		438	272	710	17.5
4HR 18/6 - PD		584	396	980	20.5	**4HR 18/6 - PS**		584	297	881	22.0
4HR 18/9 - PD		803	437	1240	27.0	**4HR 18/9 - PS**		803	352	1155	28.5
4HR 18/12 - PD		1022	450	1472	31.8	**4HR 18/12 - PS**		1022	484	1506	35.6
4HR 18/16 - PD		1314	625	1939	43.7	**4HR 18/16 - PS**		1314	574	1888	45.8
4HR 18/22 - PD		1752	725	2477	59.4	**4HR 18/22 - PS**		1752	664	2416	60.4
4HR 18/30 - PD		2336	845	3181	74.0	**4HR 18/30 - PS**		2336	764	3100	73.2

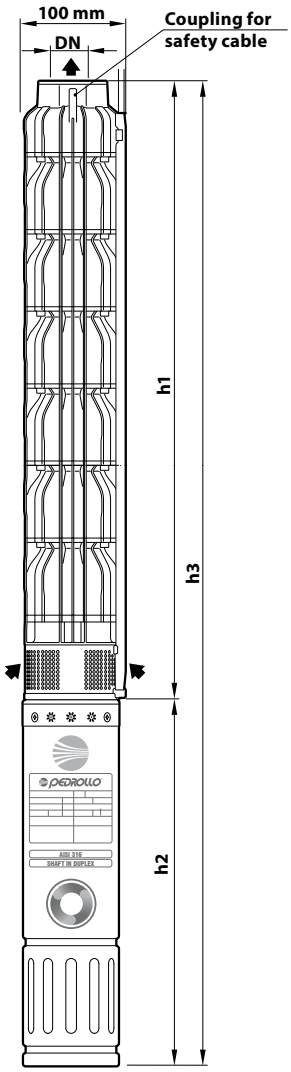

※ 4PD = rewindable oil filled motor

※ 4PS = encapsulated water filled motor

6HR Microcast stainless steel 6" submersible pumps

Clean water
Agricultural use
Civil use
Industrial use

※ **Distinguished by their exceptional mechanical resilience, our pumps excel in combating both sand wear and corrosion, making them perfect for coastal installations and brackish water environments. They are the optimal choice when seeking a high-quality product that ensures long-term operation.**

PERFORMANCE RANGE

- Flow rate up to **1500 l/min** (90 m³/h)
- Head up to **375 m**

INSTALLATION AND USE

Submersible pump designed for 6" wells, constructed with durable micro-cast stainless steel.

Designed to transfer clean or brackish water with sand content up to **100 g/m³**. Highly efficient and reliable, they are suitable for industrial, civil, and agricultural applications, such as water distribution coupled with pressure tanks, irrigation, pressure boosting, fire-fighting systems, and more.

INCLUDES

※ Three-phase electric motor 400 V - 50 Hz The pump can be supplied with motor:
- 6PD rewindable and oil filled
- 6PSR rewindable and water filled

※ **4 m** power cable

APPLICATION LIMITS

- Liquid temperature up to **+40 °C**
- Sand content max. **100 g/m³**
- Maximum operating depth below water level:
  - **200 m** with 6PD motors
  - **150 m** with 6PSR motors
- Operation:
  - in vertical position
  - horizontally with the following limits:
    6HR34 up to **11 stages** / 6HR44 up to **10 stages**
    6HR54 up to **9 stages** / 6HR64 up to **7 stages**
- Starts per hour: **20** at regular intervals
- Minimum cooling flow **8 cm/s**
- Continuous running duty **S1**

AVAILABLE UPON REQUEST

※ Different voltage requirements 60 Hz frequency
※ Counterflange kit
※ 6HR-HYD pumps with double cable cover for coupling with 400/690 V dual voltage motors ⅄/▲ (star/delta)

PATENTS - TRADE MARKS - MODELS

- Registered Community Model No. 004675106-0002

PERFORMANCE RANGE

50 Hz

6HR 34

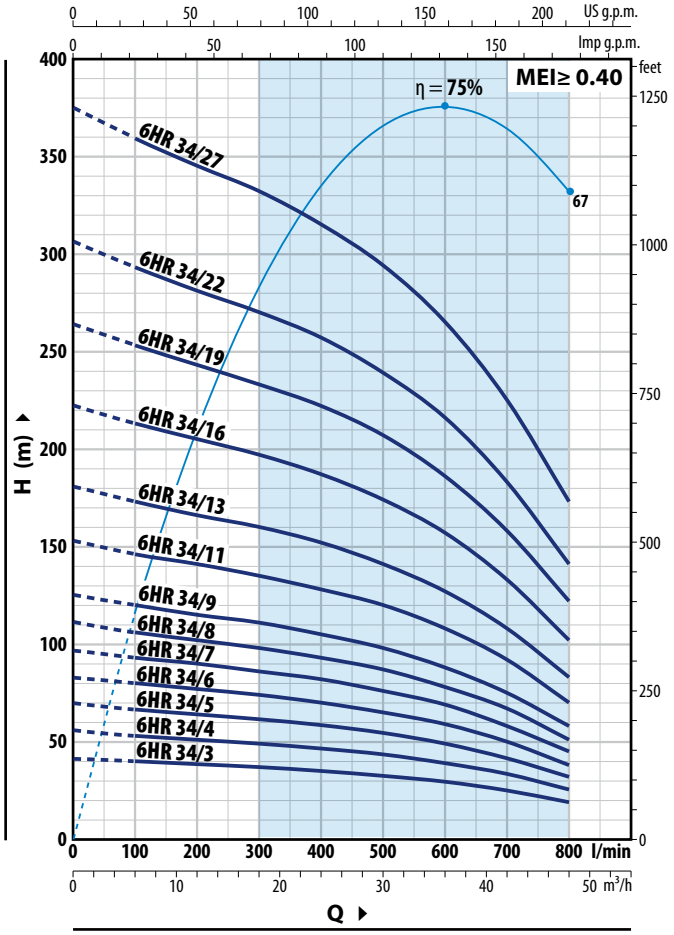

6HR 44

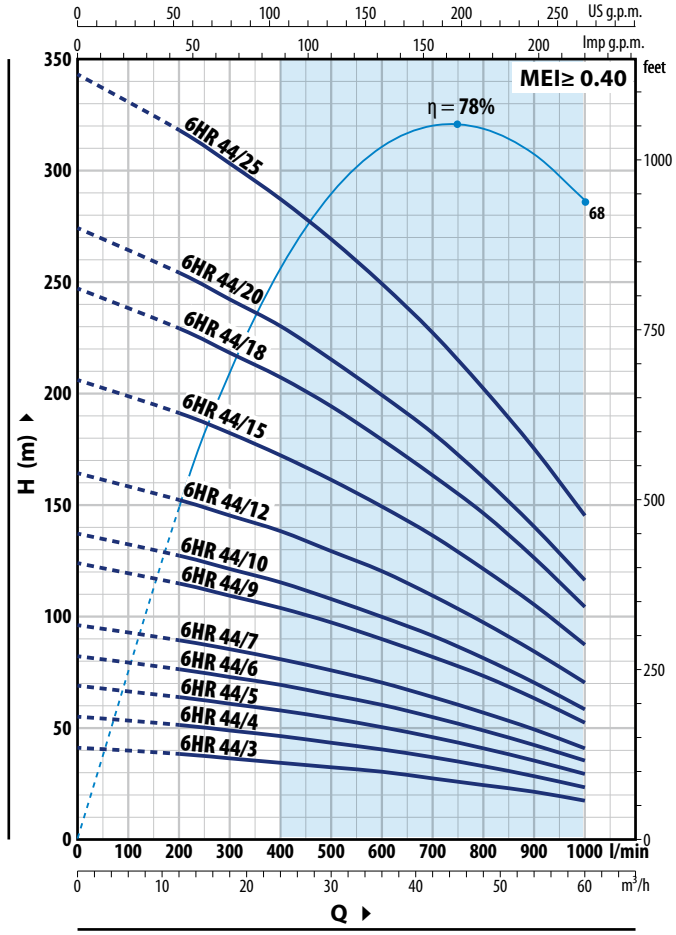

6HR 34

TYPE	POWER (P2)		Q m³/h	0	6	12	18	24	30	36	42	48
Three-phase	**kW**	**HP**	l/min	**0**	**100**	**200**	**300**	**400**	**500**	**600**	**700**	**800**
6HR 34/3	4	5.5		41.5	40	38.5	37	35	32.5	29.5	25	19
6HR 34/4	5.5	7.5		55.5	53	51	49	46.5	43.5	39	33.5	25.5
6HR 34/5	7.5	10		69.5	66.5	64	61.5	58.5	54.5	49	41.5	32
6HR 34/6	9.2	12.5		83	80	77	74	70	65	59	50	38
6HR 34/7	11	15		97	93	90	86	82	76	69	58	45
6HR 34/8	11	15		111	106	102	98	93	87	78	67	51
6HR 34/9	13	17.5	**H** metres	125	120	115	111	105	98	88	75	58
6HR 34/11	15	20		153	146	141	135	128	120	108	92	70
6HR 34/13	18.5	25		181	173	166	160	152	141	127	108	83
6HR 34/16	22	30		222	213	205	197	187	174	157	133	102
6HR 34/19 (1)	26	35		264	253	243	233	222	207	186	158	122
6HR 34/22	30	40		306	293	281	270	257	239	216	183	141
6HR 34/27	37	50		375	359	345	332	315	294	265	225	173

6HR 44

TYPE	POWER (P2)		Q m³/h	0	12	18	24	30	36	42	48	54	60
Three-phase	**kW**	**HP**	l/min	**0**	**200**	**300**	**400**	**500**	**600**	**700**	**800**	**900**	**1000**
6HR 44/3	5.5	7.5		41	38	36	34	32	30	27	24	21	17
6HR 44/4	7.5	10		55	51	48.5	46	43	40	36.5	32.5	28	23
6HR 44/5	7.5	10		68.5	63.5	60.5	57.5	54	50	45.5	40.5	35	29
6HR 44/6	9.2	12.5		82	76	72.5	69	64.5	60	54.5	48.5	42	35
6HR 44/7	11	15		96	89	85	80.5	75.5	70	63.5	56.5	49	40.5
6HR 44/9	13	17.5		123.5	114.5	109	103.5	97	89.5	81.5	73	63	52
6HR 44/10	15	20	**H** metres	137	127	121	115	107.5	99.5	91	81	70	58
6HR 44/12	18.5	25		164	152	145	138	129	120	109	97	84	70
6HR 44/15	22	30		206	191	182	172	161	149	136	121	105	87
6HR 44/18 (1)	26	35		247	229	218	207	194	179	163	146	126	104
6HR 44/20	30	40		274	254	242	230	215	199	182	162	140	116
6HR 44/25	37	50		343	318	303	287	269	249	227	202	175	145

Q = Flow rate **H** = Total manometric head

Performance curves comply with EN ISO 9906 Grade 3B tolerance limits.

(1) For pumps equipped with 6PD motor: 40 HP motor

PERFORMANCE RANGE

50 Hz

6HR 54

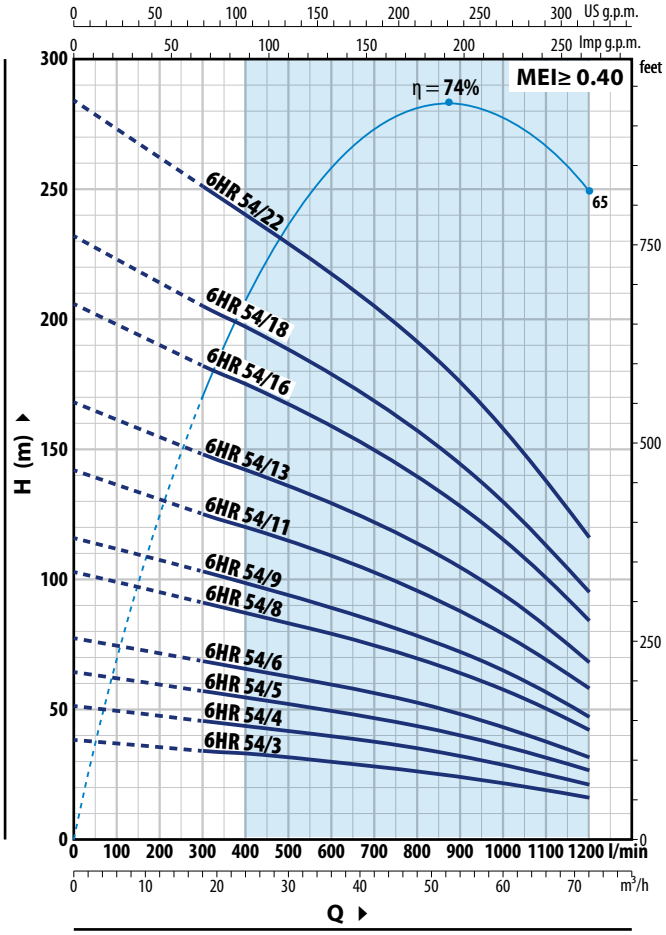

6HR 64

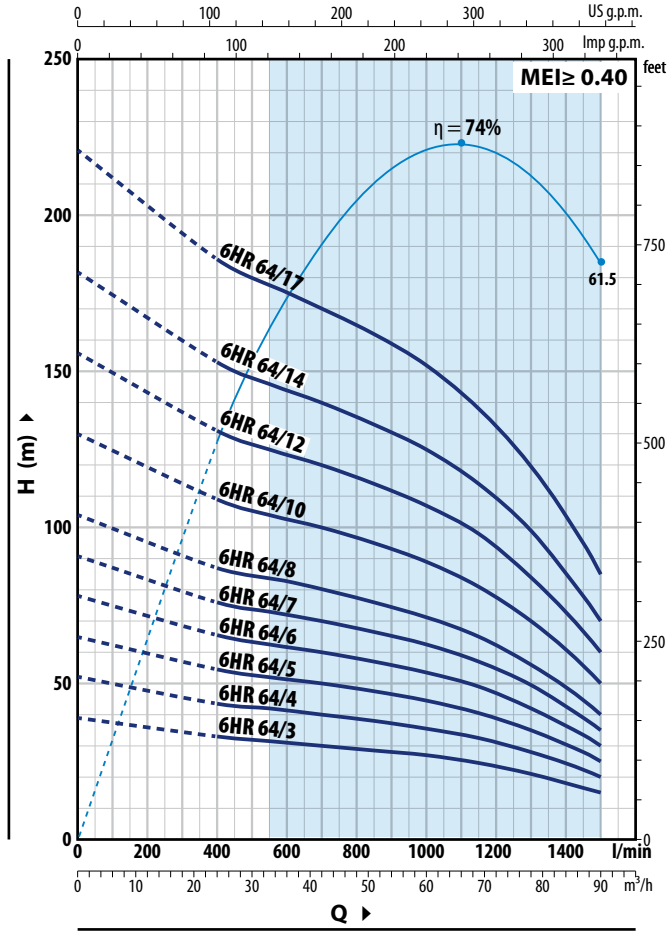

6HR 54

TYPE	POWER(P2)		Q m³/h	0	18	24	30	36	42	48	54	60	66	72
Three-phase	**kW**	**HP**	Q l/min	**0**	**300**	**400**	**500**	**600**	**700**	**800**	**900**	**1000**	**1100**	**1200**
6HR 54/3	5.5	7.5		38.5	34	33	31.5	29.5	28	26	24	21.5	19	16
6HR 54/4	7.5	10		51.5	45.5	43.5	41.5	39.5	37.5	35	32	29	25	21
6HR 54/5	9.2	12.5		64.5	57	54.5	52	49.5	46.5	43.5	40	36	31.5	26.5
6HR 54/6	11	15		77.5	68.5	65.5	62.5	59.5	56	52.5	48	43	37.5	31.5
6HR 54/8	13	17.5		103	91	87	83	79	74.5	69.5	64	57.5	50.5	42
6HR 54/9	15	20	**H** metres	116	103	98	94	89	84	78	72	65	57	47
6HR 54/11	18.5	25		142	125	120	115	109	103	96	88	79	69	58
6HR 54/13	22	30		168	148	142	136	129	121	113	104	94	82	68
6HR 54/16 (1)	26	35		206	182	175	167	159	149	139	128	115	101	84
6HR 54/18	30	40		232	205	197	188	178	168	157	144	130	113	95
6HR 54/22	37	50		284	251	240	229	218	205	192	176	158	138	116

6HR 64

TYPE	POWER(P2)		Q m³/h	0	24	33	42	51	60	69	78	87	90
Three-phase	**kW**	**HP**	Q l/min	**0**	**400**	**550**	**700**	**850**	**1000**	**1150**	**1300**	**1450**	**1500**
6HR 64/3	7.5	10		39	33	31.5	30	28.5	27	24.5	21	16.5	15
6HR 64/4	9.2	12.5		52	43.5	42	40	38	35.5	32.5	28	22.5	20
6HR 64/5	11	15		65	54.5	52	50	47.5	44.5	40.5	35	28	25
6HR 64/6	13	17.5		78	65.5	62.5	60	57	53.5	49	42	33.5	30
6HR 64/7	15	20		91	76	73	70	66.5	62.5	57	49.5	39	35
6HR 64/8	18.5	25	**H** metres	104	87	84	80	76	71	65	56	45	40
6HR 64/10	22	30		130	109	104	100	95	89	81	70	56	50
6HR 64/12 (1)	26	35		156	131	125	120	114	107	98	84	67	60
6HR 64/14	30	40		182	153	146	140	133	125	114	99	78	70
6HR 64/17	37	50		221	186	178	170	162	152	138	120	95	85

(1) For pumps equipped with 6PD motor: 40 HP motor

MATERIALS AND COMPONENTS

1	**Delivery port**	Micro-cast **AISI 304** stainless steel with thread according to ISO 228/1
2	**Check valve**	Stainless steel **AISI 304**
3	**Motor bracket**	**AISI 304** micro-cast stainless steel sized to NEMA standards
4	**Impellers**	**AISI 304** micro-cast stainless steel
5	**Diffusers**	**AISI 304** micro-cast stainless steel
6	**Pump shaft**	Stainless steel **AISI 304**
7	**Pump bearings**	Special elastomer
8	**Wear rings**	Special elastomer
9	**Tow coupling**	Stainless steel **AISI 304**
10	**Filter**	Stainless steel **AISI 304**
11	**Cable sheath**	Stainless steel **AISI 304**
12	**Motor 6"**	**※ 6PD = rewindable oil filled motor** **※ 6PSR = rewindable water filled motor**

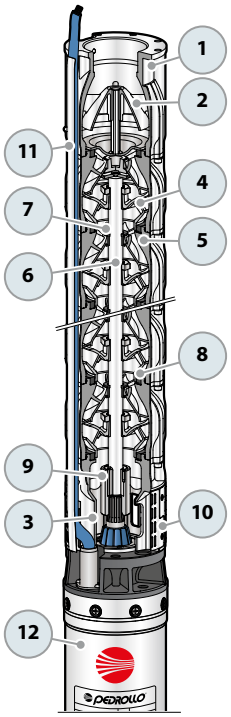

DIMENSIONS AND WEIGHT

TYPE Three-phase ※	DN	DIMENSIONS mm h1	h2	h3	kg	TYPE Three-phase ※	DN	DIMENSIONS mm h1	h2	h3	kg
6HR 34/3 - PD	3"	581	595	1176	53.1	**6HR 34/3 - PSR**	3"	581	620	1201	69.7
6HR 34/4 - PD		682	625	1307	58.4	**6HR 34/4 - PSR**		682	620	1302	74.0
6HR 34/5 - PD		783	660	1443	65.0	**6HR 34/5 - PSR**		783	670	1453	81.9
6HR 34/6 - PD		884	700	1584	72.4	**6HR 34/6 - PSR**		884	700	1584	88.8
6HR 34/7 - PD		985	765	1750	83.0	**6HR 34/7 - PSR**		985	750	1735	99.7
6HR 34/8 - PD		1086	765	1851	85.8	**6HR 34/8 - PSR**		1086	750	1836	102.5
6HR 34/9 - PD		1187	820	2007	94.4	**6HR 34/9 - PSR**		1187	780	1967	108.4
6HR 34/11 - PD		1389	820	2209	101.2	**6HR 34/11 - PSR**		1389	840	2229	121.6
6HR 34/13 - PD		1591	883	2474	115.8	**6HR 34/13 - PSR**		1591	890	2481	133.4
6HR 34/16 - PD		1894	953	2847	132.6	**6HR 34/16 - PSR**		1894	975	2869	153.0
6HR 34/19 - PD		2197	1098	3295	158.1	**6HR 34/19 - PSR**		2197	1075	3272	176.1
6HR 34/22 - PD		2500	1098	3598	166.8	**6HR 34/22 - PSR**		2500	1215	3715	202.8
6HR 34/27 - PD		3005	1233	4238	190.2	**6HR 34/27 - PSR**		3005	1295	4300	228.2
6HR 44/3 - PD		581	625	1206	54.1	**6HR 44/3 - PSR**		581	620	1201	69.68
6HR 44/4 - PD		682	660	1342	62.1	**6HR 44/4 - PSR**		682	670	1352	78.96
6HR 44/5 - PD		783	660	1443	64.9	**6HR 44/5 - PSR**		783	670	1453	81.8
6HR 44/6 - PD		884	700	1584	72.3	**6HR 44/6 - PSR**		884	700	1584	88.7
6HR 44/7 - PD		985	765	1750	82.9	**6HR 44/7 - PSR**		985	750	1735	99.62
6HR 44/9 - PD		1187	820	2007	94.4	**6HR 44/9 - PSR**		1187	780	1967	108.4
6HR 44/10 - PD		1288	820	2108	98.3	**6HR 44/10 - PSR**		1288	840	2128	118.7
6HR 44/12 - PD		1490	883	2373	112.9	**6HR 44/12 - PSR**		1490	890	2380	130.5
6HR 44/15 - PD		1793	953	2746	129.7	**6HR 44/15 - PSR**		1793	975	2768	150.1
6HR 44/18 - PD		2096	1098	3194	155.2	**6HR 44/18 - PSR**		2096	1075	3171	173.2
6HR 44/20 - PD		2298	1098	3396	160.9	**6HR 44/20 - PSR**		2298	1215	3513	196.9
6HR 44/25 - PD		2803	1233	4036	184.4	**6HR 44/25 - PSR**		2803	1295	4098	222.4
6HR 54/3 - PD		599	625	1224	54.3	**6HR 54/3 - PSR**		599	620	1219	69.9
6HR 54/4 - PD		706	660	1366	62.4	**6HR 54/4 - PSR**		706	670	1376	79.3
6HR 54/5 - PD		813	700	1513	69.8	**6HR 54/5 - PSR**		813	700	1513	86.2
6HR 54/6 - PD		920	765	1685	80.5	**6HR 54/6 - PSR**		920	750	1670	97.2
6HR 54/8 - PD		1134	820	1954	92.1	**6HR 54/8 - PSR**		1134	780	1914	106.1
6HR 54/9 - PD		1241	820	2061	96.1	**6HR 54/9 - PSR**		1241	840	2081	116.5
6HR 54/11 - PD		1455	883	2338	110.8	**6HR 54/11 - PSR**		1455	890	2345	128.4
6HR 54/13 - PD		1669	953	2622	124.9	**6HR 54/13 - PSR**		1669	975	2644	145.3
6HR 54/16 - PD		1990	1098	3088	149.6	**6HR 54/16 - PSR**		1990	1075	3065	167.6
6HR 54/18 - PD		2204	1098	3302	156.5	**6HR 54/18 - PSR**		2204	1215	3419	192.5
6HR 54/22 - PD		2632	1233	3865	177.4	**6HR 54/22 - PSR**		2632	1295	3927	215.4
6HR 64/3 - PD		599	660	1259	58.0	**6HR 64/3 - PSR**		599	670	1269	76.3
6HR 64/4 - PD		706	700	1406	66.9	**6HR 64/4 - PSR**		706	700	1406	83.3
6HR 64/5 - PD		813	765	1578	75.6	**6HR 64/5 - PSR**		813	750	1563	92.3
6HR 64/6 - PD		920	820	1740	86.2	**6HR 64/6 - PSR**		920	780	1700	100.2
6HR 64/7 - PD		1027	820	1847	89.2	**6HR 64/7 - PSR**		1027	840	1867	109.6
6HR 64/8 - PD		1134	883	2017	100.9	**6HR 64/8 - PSR**		1134	890	2024	118.5
6HR 64/10 - PD		1348	953	2301	115.1	**6HR 64/10 - PSR**		1348	975	2323	135.5
6HR 64/12 - PD		1562	1098	2660	138.0	**6HR 64/12 - PSR**		1562	1075	2637	152.4
6HR 64/14 - PD		1776	1098	2874	143.9	**6HR 64/14 - PSR**		1776	1215	2991	174.9
6HR 64/17 - PD		2097	1233	3330	161.6	**6HR 64/17 - PSR**		2097	1295	3392	199.6

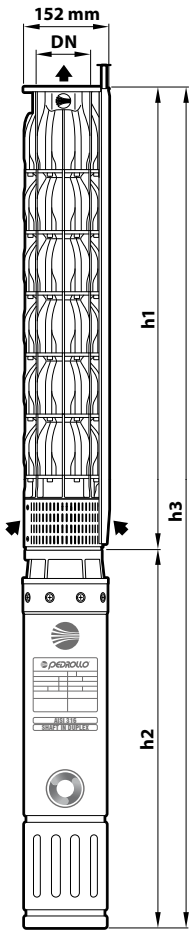

COUNTERFLANGE

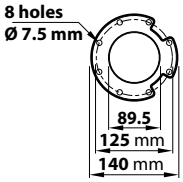

※ 6PD = rewindable oil filled motor

※ 6PSR = rewindable water filled motor

※ **High-quality submersible motors made of premium AISI 316 and DUPLEX materials for a long service life**

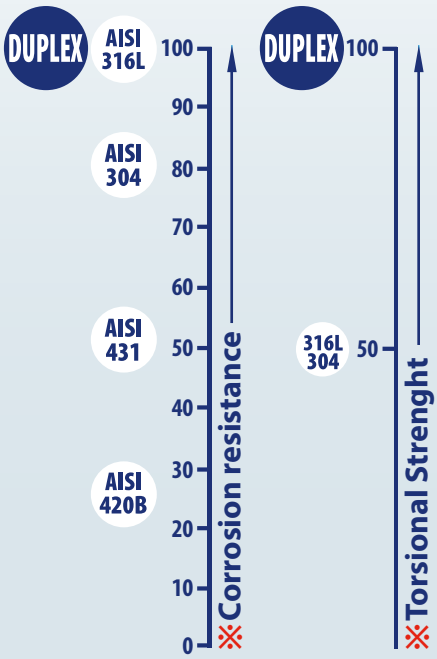

※ **DUPLEX stainless steel shaft**

※ **AISI 316 casing**

※ **DUPLEX steel is recognized for its outstanding mechanical strength, which is twice that of AISI 304/316L steel.**

ELECTRIC MOTOR

Our **4"** submersible oil-filled motors are crafted from top-tier materials and designed with industry expertise. They ensure exceptional performance, superior quality, and maintenance-free longevity.

TECHNICAL DATA

- 2 poles, 50 Hz (n ≈ 2900 min^{-1})
- Voltage:
  - single-phase 230 V
  - three-phase **400 V**
- Power from **0.37** to **7.5 kW**
- Continuous running duty **S1**
- Class F insulation and IP 68 protection

AVAILABLE UPON REQUEST

※ Different voltage requirements 60 Hz frequency

MATERIALS AND COMPONENTS

※ **Rewindable** motor in oil bath (non-toxic food-safe oil)

※ Sleeve: AISI 316 stainless steel

※ Coupling dimensions in compliance with NEMA standards.

※ Power cable included:
- **2 m** for power ratings from 0.37 to 2.2 kW
- **3.6 m** for powers from 3 to 7.5 kW

※ Shaft: 'DUPLEX' stainless steel

APPLICATION LIMITS

- Liquid temperature up to **+40 °C**
- Depth of use up to **200 m** below water level
- Starts per hour: max. **20** at regular intervals
- Minimum cooling flow **8 cm/s**

CORROSION CONTROL

The sacrificial anode, composed of a 'cadmium-free' zinc-aluminum alloy safe for potable water, is simple to attach to 4PD motors. It shields against corrosion, especially from stray currents or aggressive water, thus greatly extending the lifespan of the motor and pump components.

Available upon request - code ASS4PDA01

PERFORMANCE DATA

50 Hz

※ Single-phase versions - 230 V / 50 Hz

TYPE Single-phase	Rated power P2 kW	Rated power P2 HP	Axial load N	Revolutions min⁻¹	Starting current / Current nominal	Power factor Cos φ	Capacitor (VL=450V) µF	h2 mm	Weight kg
4PDm / 0.50	**0.37**	**0.50**	2000	2820	3.2	0.9	20	311	6.8
4PDm / 0.75	**0.55**	**0.75**		2830	3.2	0.9	25	331	7.9
4PDm / 1	**0.75**	**1**		2835	3	0.93	35	356	8.9
4PDm / 1.5	**1.1**	**1.5**		2850	3.1	0.93	40	396	10.7
4PDm / 2	**1.5**	**2**		2850	3.3	0.92	60	437	12.8
4PDm / 3	**2.2**	**3**		2830	3.2	0.95	75	492	14.9

※ Three-phase versions - 400 V / 50 Hz

TYPE Three-phase	Rated power P2 kW	Rated power P2 HP	Axial load N	Revolutions min⁻¹	Starting current / Current nominal	Power factor Cos φ	h2 mm	Weight kg
4PD / 0.50	**0.37**	**0.50**	2000	2850	3.3	0.6	311	7.0
4PD / 0.75	**0.55**	**0.75**		2840	4.1	0.65	331	7.7
4PD / 1	**0.75**	**1**		2840	3.7	0.72	356	8.8
4PD / 1.5	**1.1**	**1.5**		2825	4.5	0.75	371	9.5
4PD / 2	**1.5**	**2**		2835	4	0.73	396	10.7
4PD / 3	**2.2**	**3**		2815	4.5	0.74	437	12.6
4PD / 4	**3**	**4**	3000	2840	5.5	0.81	450	13.7
4PD / 5.5	**4**	**5.5**	5000	2845	5.3	0.78	625	20.5
4PD / 7.5	**5.5**	**7.5**		2850	5.2	0.75	725	28.5
4PD / 10	**7.5**	**10**		2850	5.2	0.76	845	32.0

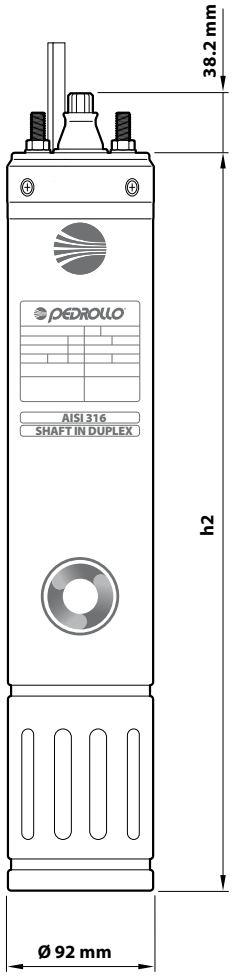

ABSORPTION

TYPE Single-phase	VOLTAGE 230 V
4PDm / 0.50	3.6 A
4PDm / 0.75	4.7 A
4PDm / 1	5.9 A
4PDm / 1.5	8.3 A
4PDm / 2	10.7 A
4PDm / 3	15.2 A

TYPE Three-phase	VOLTAGE 230 V	VOLTAGE 400 V
4PD / 0.50	3.1 A	1.8 A
4PD / 0.75	3.5 A	2.0 A
4PD / 1	4.3 A	2.5 A
4PD / 1.5	5.9 A	3.4 A
4PD / 2	8.3 A	4.8 A
4PD / 3	10.6 A	6.1 A
4PD / 4	12.3 A	7.1 A
4PD / 5.5	17.0 A	9.8 A
4PD / 7.5	23.3 A	13.5 A
4PD / 10	–	17.5 A

4PS 4" 'encapsulated' submersible motors

※ **Encapsulated water-filled motors ensure absolute operational safety**

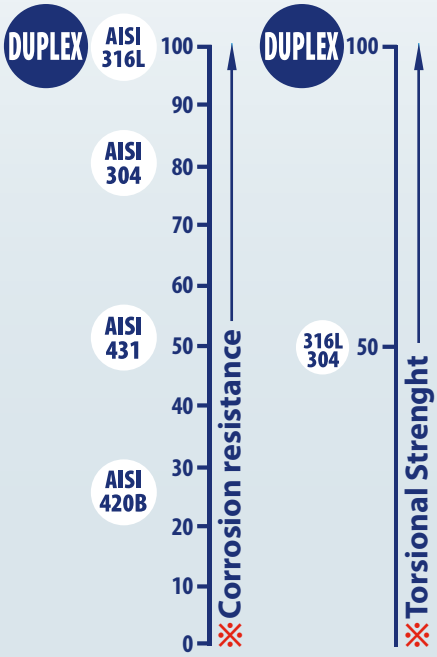

※ **DUPLEX stainless steel shaft**

※ **AISI 316 casing**

※ **DUPLEX steel is recognized for its outstanding mechanical strength, which is twice that of AISI 304/316L steel.**

ELECTRIC MOTOR

The **4PS** series encapsulated 4" submersible motors are ideal for applications where reliable, maintenance-free operation is crucial.

Featuring a special "canned" construction, these motors eliminate the need for mechanical sealing, ensuring total safety against water infiltration into the electrical winding.

TECHNICAL DATA

- 2 poles, 50 Hz (n ≈ 2900 min^{-1})
- Voltage:
  - single-phase 230 V
  - three-phase 400 V
- Power from **0.37** to **7.5 kW**
- Continuous running duty **S1**
- Class F insulation and IP 68 protection

AVAILABLE UPON REQUEST

※ Other voltages

MATERIALS AND COMPONENTS

※ Encapsulated water filled submersible motors
※ **Sleeve: AISI 316 stainless steel**
※ **Shaft: 'DUPLEX' stainless steel**
※ Mating dimensions according to **NEMA**standard .
※ Power cable included:
  - **2 m** for power ratings from 0.37 to 2.2 kW
  - **3.6 m** for power ratings from 3 to 7.5 kW.

APPLICATION LIMITS

- Liquid temperature up to **+35 °C**
- Depth of use up to **300 m** below water level
- Starts per hour: max. **20** at regular intervals
- Minimum cooling flow **8 cm/s**

WARRANTY

- 3-Year Warranty Included in Our Standard Terms and Conditions

PERFORMANCE DATA

50 Hz

※ Single-phase versions - 230 V / 50 Hz

TYPE Single-phase	Rated power P2 kW	Rated power P2 HP	Axial load N	Revolutions min⁻¹	Starting current / Current nominal	Power factor Cos φ	Capacitor (VL=450V) µF	h2 mm	Weight kg
4PSm / 0.50	**0.37**	**0.50**	2000	2845	3.4	0.88	20	237	8.6
4PSm / 0.75	**0.55**	**0.75**		2840	3.8	0.93	25	257	9.0
4PSm / 1	**0.75**	**1**		2835	3.8	0.92	35	272	9.6
4PSm / 1.5	**1.1**	**1.5**		2820	3.3	0.91	40	312	11.5
4PSm / 2	**1.5**	**2**	3000	2830	3.2	0.94	60	352	13.2
4PSm / 3	**2.2**	**3**		2810	3.6	0.94	70	402	15.5

※ Three-phase versions - 400 V / 50 Hz

TYPE Three-phase	Rated power P2 kW	Rated power P2 HP	Axial load N	Revolutions min⁻¹	Starting current / Current nominal	Power factor Cos φ	h2 mm	Weight kg
4PS / 0.50	**0.37**	**0.50**	2000	2855	4.2	0.64	237	8.1
4PS / 0.75	**0.55**	**0.75**		2835	4.1	0.70	237	8.1
4PS / 1	**0.75**	**1**		2830	4.4	0.68	257	9.0
4PS / 1.5	**1.1**	**1.5**		2825	4.6	0.69	272	9.6
4PS / 2	**1.5**	**2**	3000	2820	4.7	0.73	297	10.7
4PS / 3	**2.2**	**3**		2805	5.2	0.74	352	13.1
4PS / 4	**3**	**4**		2845	5.7	0.82	484	18.3
4PS / 5.5	**4**	**5.5**	6500	2850	5.9	0.78	574	22.5
4PS / 7.5	**5.5**	**7.5**		2845	5.9	0.84	664	26.7
4PS / 10	**7.5**	**10**		2830	5.8	0.84	764	31.6

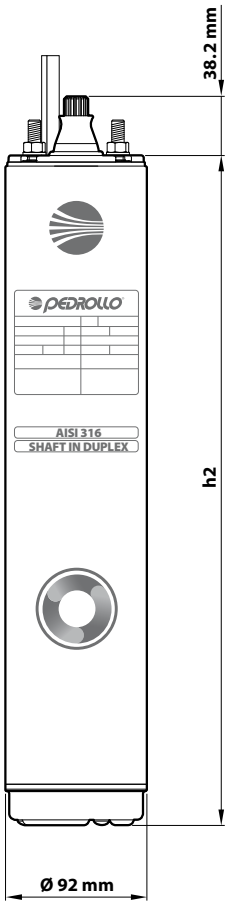

ABSORPTION

TYPE Single-phase	VOLTAGE 230 V
4PSm / 0.50	3.5 A
4PSm / 0.75	4.4 A
4PSm / 1	5.9 A
4PSm / 1.5	8.1 A
4PSm / 2	10.7 A
4PSm / 3	16.2 A

TYPE Three-phase	VOLTAGE 400 V
4PS / 0.50	1.6 A
4PS / 0.75	1.8 A
4PS / 1	2.5 A
4PS / 1.5	3.4 A
4PS / 2	4.3 A
4PS / 3	6.0 A
4PS / 4	6.9 A
4PS / 5.5	9.6 A
4PS / 7.5	12.4 A
4PS / 10	16.9 A

6PD 6" submersible motors

※ **High-quality submersible motors made of premium AISI 316 and DUPLEX materials for a long service life**

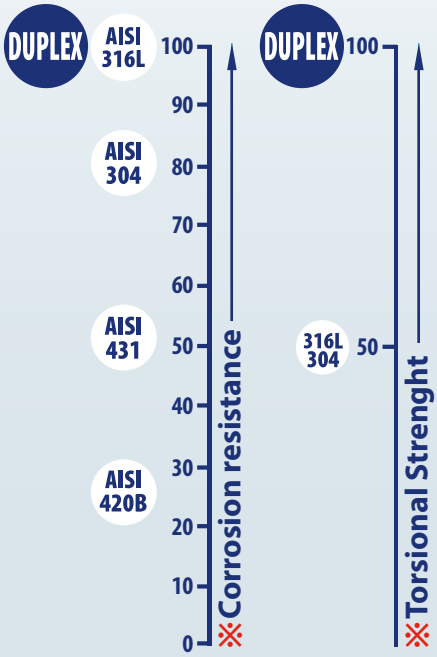

※ **DUPLEX stainless steel shaft**

※ **AISI 316 casing**

※ **DUPLEX steel is recognized for its outstanding mechanical strength, which is twice that of AISI 304/316L steel.**

ELECTRIC MOTOR

6" submersible oil-filled motors are crafted from top-tier materials and designed with industry expertise.

They ensure exceptional performance, superior quality, and maintenance-free longevity.

TECHNICAL DATA

- 2 poles, 50 Hz (n ≈ 2900 min^{-1})
- Three-phase voltage 400 V
- Power from **4** to **37 kW**
- Continuous running duty **S1**
- Class F insulation and IP 68 protection

AVAILABLE UPON REQUEST

※ Different voltage requirements 60 Hz frequency

※ Motors with double power cable for star/delta starting(**Y/Δ**)

MATERIALS AND COMPONENTS

※ Rewindable oil filled submersible motors (non-toxic food-safe oil).

※ **Sleeve: AISI 316 stainless steel**

※ **Shaft: 'DUPLEX' stainless steel**

※ Coupling dimensions in compliance with NEMA standards.

※ Power cable included:
- **3 m** for power up to 15 kW
- **4 m** for powers from 18.5 to 37 kW.

APPLICATION LIMITS

- Liquid temperature up to **+35 °C**
- Depth of use up to **200 m** below water level
- Starts per hour: **30** at regular intervals
- Minimum cooling flow **8 cm/s**

PERFORMANCE DATA

50 Hz

※ Three-phase versions - 400 V / 50 Hz

TYPE	Rated power P2		Axial load	Revolu-tions	Starting current / Current nominal	Yield	Power factor	Rated torque	Starting torque / Torque rated	h2	Weight
Three-phase	kW	HP	N	min⁻¹		η	Cos φ	Nm		mm	kg
6PD / 5.5	**4**	**5.5**	10000	2840	5.1	74%	0.86	13.5	1.65	595	33.4
6PD / 7.5	**5.5**	**7.5**		2840	5.1	74%	0.84	18.5	1.60	625	34.4
6PD / 10	**7.5**	**10**		2850	4.7	78%	0.83	25.1	1.55	660	38.1
6PD / 12.5	**9.2**	**12.5**		2880	4.5	81%	0.77	30.5	1.60	700	42.6
6PD / 15	**11**	**15**		2850	5.2	85%	0.82	36.9	2.20	765	48.3
6PD / 20	**15**	**20**		2840	5.0	82%	0.86	50.5	2.60	820	58.0
6PD / 25	**18.5**	**25**	20000	2850	5.9	84%	0.84	62.0	2.30	883	62.8
6PD / 30	**22**	**30**		2850	5.5	84%	0.83	73.8	2.45	953	79.4
6PD / 40	**30**	**40**		2860	5.5	85%	0.83	100.2	1.90	1098	91.0
6PD / 50	**37**	**50**		2840	5.1	84%	0.83	124.5	2.10	1233	92.0

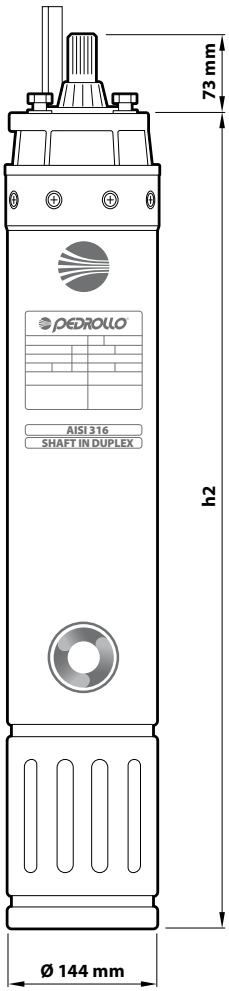

ABSORPTION

TYPE **Three-phase**	VOLTAGE **400 V**
6PD / 5.5	9.3 A
6PD / 7.5	12.9 A
6PD / 10	17.1 A
6PD / 12.5	21.8 A
6PD / 15	23.8 A
6PD / 20	31.6 A
6PD / 25	38.5 A
6PD / 30	46.5 A
6PD / 40	63.0 A
6PD / 50	78.0 A

6PSR 6" submersible water filled motors

※ **Rewindable water filled motors ensure absolute operational safety**

ELECTRIC MOTOR

Rewindable water-filled motors. The wound stator consists of copper wire coated with water-repellent thermoplastic material with high dielectric properties.

TECHNICAL DATA

- 2-pole electric motor, 50 Hz (n ≈ 2900 min^{-1})
- Three-phase voltage **400 V**
- Power from **5.5** to **37 kW**
- Insulation: class Y
- Protection rating: IP 68

AVAILABLE UPON REQUEST

※ Different voltage requirements 60 Hz frequency
※ Motors with double power cable for starting star/triangle**(Y/Δ)**

MATERIALS AND COMPONENTS

※ **Rewindable** submersible motors in a **water filled**.
※ **Sleeve: AISI 304 stainless steel**
※ **Motor mounts and base: cast iron G25**
※ **Shaft: AISI 431 stainless steel**
※ Coupling dimensions in compliance with NEMA standards .
※ Power cable included:
※ **3 m** for power ratings from 5.5 kW to 18.5 kW
※ **5 m** for powers from 22 to 37 kW.

APPLICATION LIMITS

- Liquid temperature up to **+30 °C**
- Depth of use up to **150 m** below water level
- Starts per hour: 20 at regular intervals
- Minimum cooling flow **8 cm/s**
- Continuous running duty **S1**

PERFORMANCE DATA

50 Hz

※ Three-phase versions - 400 V / 50 Hz

TYPE	Rated power P2		Axial load	Revolu-tions	Starting current / Current nominal	Yield	Power factor	Rated torque	Starting torque / Torque rated	h2	Weight
Three-phase	kW	HP	N	min-1		η	Cos φ	Nm		mm	kg
6PSR / 7.5	**5.5**	**7.5**		2850	5.1	78%	0.85	19	1.7	620	53.0
6PSR / 10	**7.5**	**10**		2855	5.1	79%	0. 85	25	1.7	670	58.0
6PSR / 12.5	**9.2**	**12.5**		2860	4.9	80%	0.84	31	1.7	700	62.0
6PSR / 15	**11**	**15**	20000	2865	5	81%	0.85	37	1.8	750	68.0
6PSR /17.5	**13**	**17.5**		2860	5.1	81.5%	0.85	43	1.7	780	71.0
6PSR /20	**15**	**20**		2865	4.8	83%	0.86	49	1.6	840	78.0
6PSR / 25	**18.5**	**25**		2840	5	82%	0.85	61	1.7	890	84.0
6PSR / 30	**22**	**30**		2860	5.2	82.5%	0.86	74	1.6	975	94.0
6PSR / 35	**26**	**35**	28000	2860	5.2	83.5%	0.85	87	1.6	1075	104.0
6PSR / 40	**30**	**40**		2860	5.2	83.5%	0.86	103	1.6	1215	122.0
6PSR / 50	**37**	**50**		2860	5.3	83.5%	0.86	125	1.7	1295	130.0

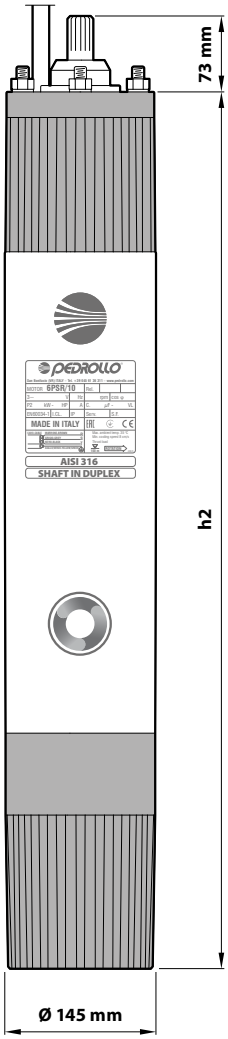

ABSORPTION

TYPE **Three-phase**	VOLTAGE **400 V**
6PSR / 7.5	13.0 A
6PSR / 10	16.0 A
6PSR / 12.5	20.0 A
6PSR / 15	23.0 A
6PSR / 17.5	27.5 A
6PSR / 20	30.0 A
6PSR / 25	38.0 A
6PSR / 30	45.0 A
6PSR / 35	53.0 A
6PSR / 40	60.5 A
6PSR / 50	75.5 A

TOP MULTI Multi-stage submersible pumps

Clean water
Domestic use
Civil use

TOP MULTI 1

TOP MULTI 2-3-4-5

PERFORMANCE RANGE

- Flow rate up to **120 l/min** (7.2 m^3/h)
- Head up to **52 m**

INSTALLATION AND USE

TOPMULTI® pumps are designed to transfer **clean water** free from abrasive particles and liquids that will not damage the pump's components. Efficient and reliable, they are ideal for domestic applications involving tanks, reservoirs, and deep wells. They are also perfect for collecting rainwater from water tanks (rain barrels) for manual watering or irrigation systems.

APPLICATION LIMITS

- Maximum operating depth below water level:
  - up to **3 m** for TOP MULTI 1
  - up to **10 m** for TOP MULTI 2-3-4-5
  (with an appropriately sized power cable)
- Liquid temperature up to **+40 °C**
- Draining capability:
  – up to **25 mm** from the bottom for TOP MULTI 1
  – up to **35 mm** from the bottom for TOP MULTI 2-3-4-5

INCLUDES

※ Power cable length **10 m**
※ Float switch
※ Anti-vibration feet
※ Hose connector **Ø 35 mm**
※ Sleeve with clapet valve (for TOP MULTI 2-3-4-5)

PATENTS - TRADE MARKS - MODELS

- Registered Community Model No. 000885587 for TOP MULTI 2-3-4-5
- TOP MULTI® Registered trademark No. 0001334477

AVAILABLE UPON REQUEST

※ Different voltage requirements 60 Hz frequency

 ※ **Start of production with new color 03.2024** ※

CURVES AND PERFORMANCE DATA

50 Hz

TOP MULTI 1 - 2 - 4

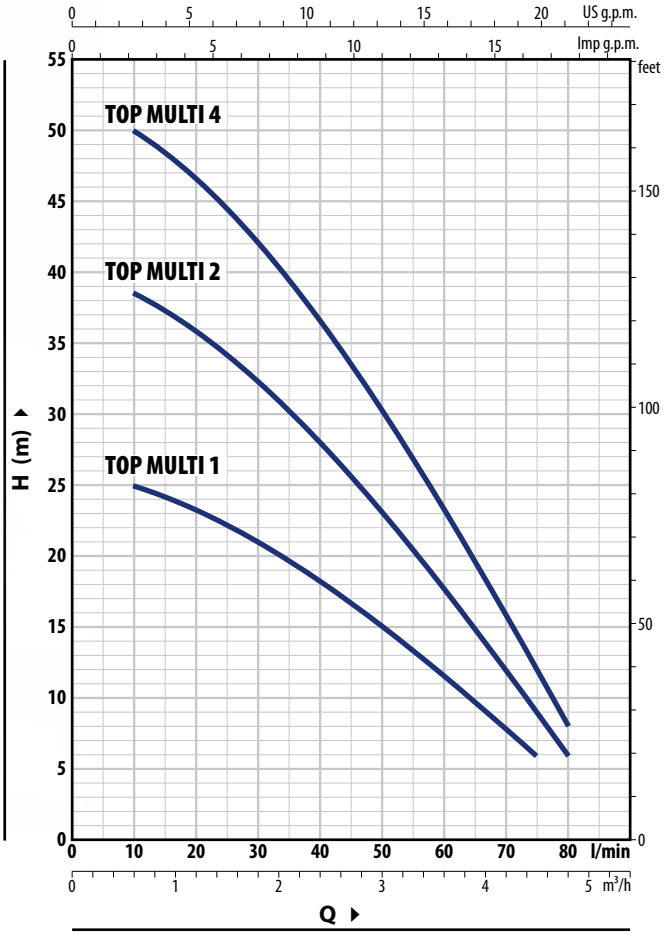

TOP MULTI 3 - 5

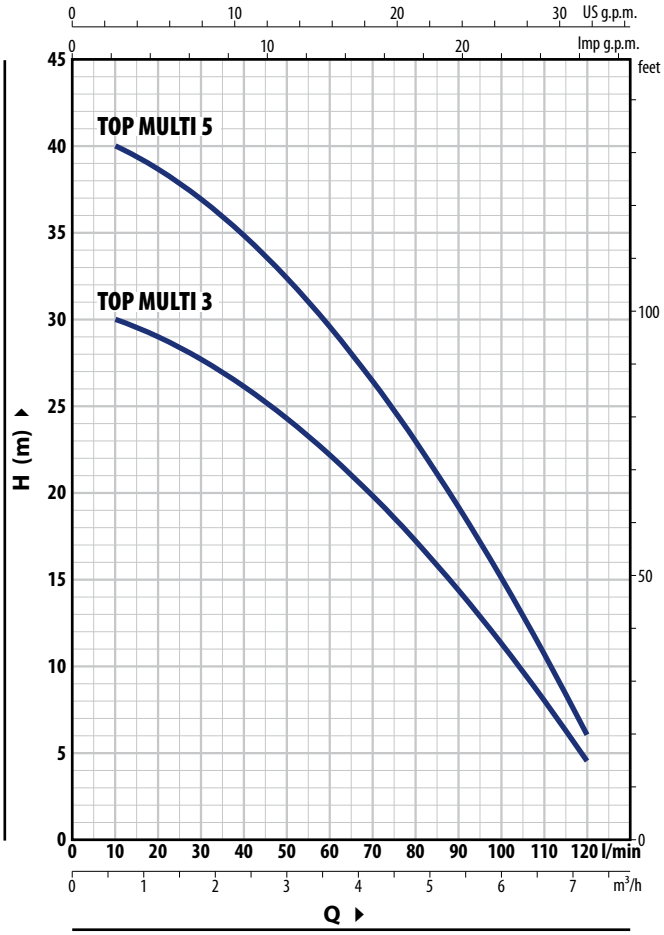

TOP MULTI 1 - 2 - 4

TYPE	POWER (P2)		Q m³/h	0	0.6	1.2	1.8	2.4	3.0	3.6	4.2	4.5	4.8
Single-phase	**kW**	**HP**	Q l/min	**0**	**10**	**20**	**30**	**40**	**50**	**60**	**70**	**75**	**80**
TOP MULTI 1	0.37	0.50		26	25	23.3	21	18.3	15	11.6	8	6	
TOP MULTI 2	0.55	0.75	**H** metres	40	38.5	36	32.5	28	23	17.7	12	9	6
TOP MULTI 4	0.75	1		52	50	46.5	42	36.5	30.5	23.3	15.8	12	8

TOP MULTI 3 - 5

TYPE	POWER (P2)		Q m³/h	0	0.6	1.2	1.8	2.4	3.0	3.6	4.2	4.8	5.4	6.0	6.6	7.2
Single-phase	**kW**	**HP**	Q l/min	**0**	**10**	**20**	**30**	**40**	**50**	**60**	**70**	**80**	**90**	**100**	**110**	**120**
TOP MULTI 3	0.55	0.75	**H** metres	30.5	30	29	27.5	26	24.3	22.2	19.8	17.2	14.4	11.3	8	4.5
TOP MULTI 5	0.75	1		41	40	38.5	37	35	32.5	29.5	26.5	23	19.2	15	10.7	6

Q = Flow rate **H** = Total manometric head

Performance curves comply with EN ISO 9906 Grade 3B tolerance limits.

ABSORPTION

TYPE	VOLTAGE
Single-phase	**230 V**
TOP MULTI 1	2.0 A
TOP MULTI 2	3.4 A
TOP MULTI 3	3.6 A
TOP MULTI 4	3.9 A
TOP MULTI 5	3.9 A

DIMENSIONS AND WEIGHT

TOP MULTI 1

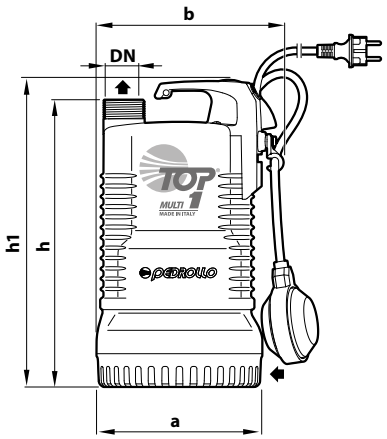

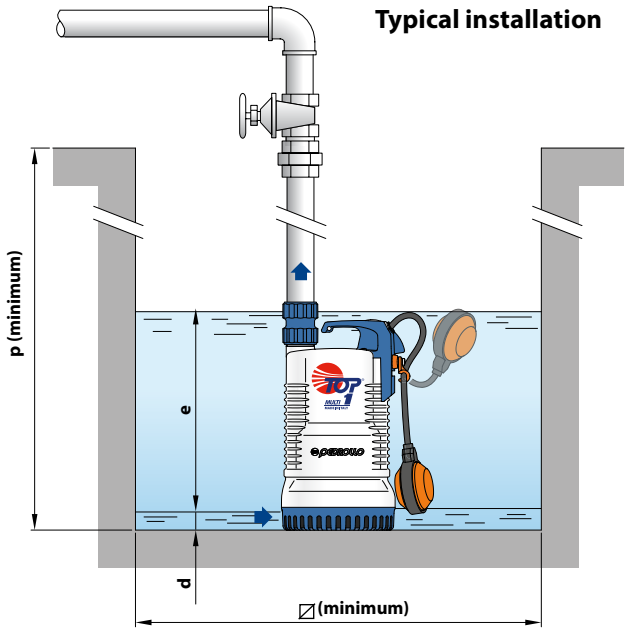

TOP MULTI 2-3-4-5

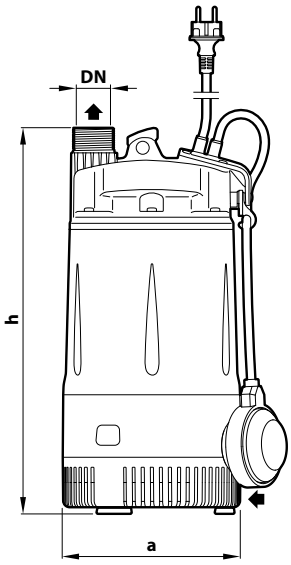

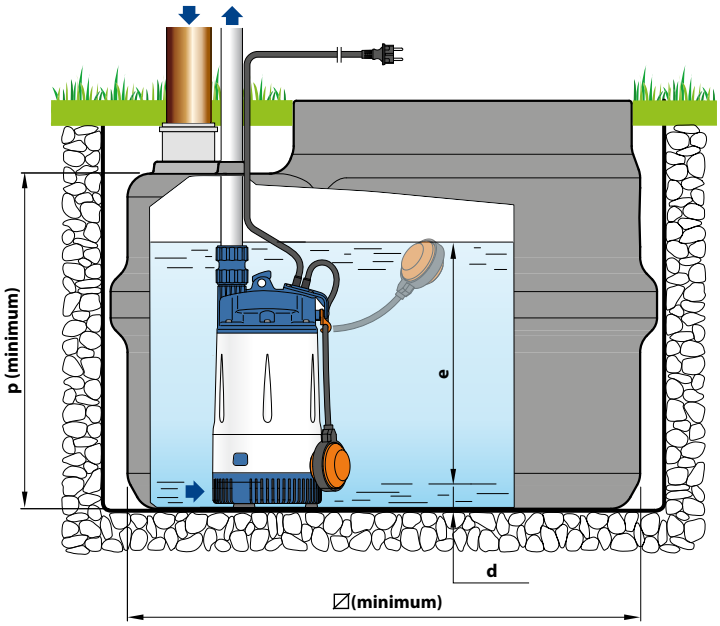

TYPE	PORT DN	NO. STAGES	DIMENSIONS mm a	b	h	h1	d	e	p	⧄	kg
TOP MULTI 1	1¼"	2	170	192	295	315	25	adjustable	350	350	6.9
TOP MULTI 2		3	178	-	380	-	35		500	500	9.3
TOP MULTI 3											9.3
TOP MULTI 4		4			415						10.4
TOP MULTI 5											10.5

PALLET CAPACITY

TYPE	NO. OF PUMPS
TOP MULTI 1	60
TOP MULTI 2	60
TOP MULTI 3	60
TOP MULTI 4	60
TOP MULTI 5	60

TOP MULTI 1

MATERIALS AND COMPONENTS

1	**Pump body**	Technopolymer
2	**Suction filter**	Technopolymer
3	**Containment stages**	Technopolymer
4	**Impellers**	Noryl™
5	**Diffusers and stage boxes**	Noryl™
6	**Diffuser vanes**	Technopolymer
7	**Motor sleeve**	Stainless steel **AISI 304**
8	**Motor cover**	Stainless steel **AISI 304**
9	**Motor shaft**	Stainless steel **AISI 431**
10	**Mechanical seal**	**STA-12R** Ceramic/Graphite/NBR
11	**Shaft seal**	Ø 12 x Ø 19 x H 5 mm
12	**Capacitor**	
13	**Electric motor**	
14	**Handle group** Including: - Float switch - Power cable with Schuko plug	
15	**Ferrule and hose nozzle**	
	Sleeve With built-in clapet valve	

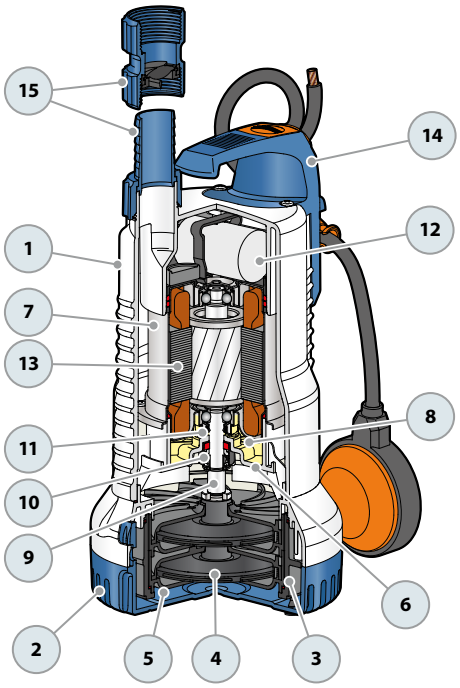

TOP MULTI 2-3-4-5

MATERIALS AND COMPONENTS

1	**Delivery port**	Technopolymer
2	**Pump body**	Technopolymer
3	**Suction filter**	Technopolymer
4	**Diffuser vanes**	Technopolymer
5	**Motor sleeve**	Stainless steel **AISI 304**
6	**Impellers**	Noryl™
7	**Diffusers and stage boxes**	Noryl™
8	**Motor shaft**	Stainless steel **AISI 431**
9	**Double mechanical seal** **STA-13R** Motor side Ceramic/Graphite/NBR **STA-13R SIC** Pump side SIC/Graphite/NBR	
10	**Capacitor**	
11	**Electric motor**	
12	**Power cable** with Schuko plug	
13	**Float switch**	
14	**Ferrule and hose nozzle**	
	Sleeve With built-in clapet valve	
15	**Anti-vibration feet**	

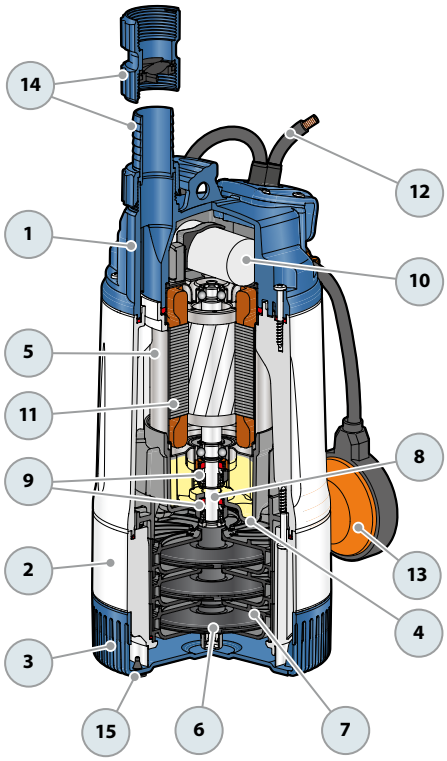

TOP MULTI-EVO Multi-stage submersible pumps

Clean water
Domestic use
Civil use

TOP MULTI 1 - EVO

TOP MULTI 2-3-4-5 - EVO

PERFORMANCE RANGE

- Flow rate up to **120 l/min** (7.2 m^3/h)
- Head up to **52 m**

INSTALLATION AND USE

TOP MULTI-EVO pumps are designed to transfer **clean water** free from abrasive particles and liquids that will not damage the pump's components. Efficient and reliable, they are ideal for domestic applications involving tanks, reservoirs, and deep wells. They are also perfect for collecting rainwater from water tanks (rain barrels) for manual watering or irrigation systems.

APPLICATION LIMITS

- Maximum operating depth below water level:
  - up to **3 m** for TOP MULTI 1-EVO
  - up to **10 m** for TOP MULTI 2-3-4-5 EVO
  (with an appropriately sized power cable)
- Liquid temperature up to **+40 °C**
- Draining capability:
  - up to **25 mm** from the bottom for TOP MULTI 1-EVO
  - up to **35 mm** from the bottom for TOP MULTI 2-3-4-5 EVO
- Manometric suction head up to **7 m**

PATENTS - TRADE MARKS - MODELS

- TOP MULTI® Registered trademark No. 0001334477

INCLUDES

※ **10 m** power cable
※ Float switch
※ Hose connector **Ø 35 mm**
※ Complete sleeve with clapet valve

AVAILABLE UPON REQUEST

※ Different voltage requirements 60 Hz frequency
※ **KGE - Floating suction kit**

The KGE kit enables suction about 10 cm below the water surface, avoiding floating debris and sediment, thereby protecting the pump from damage.

Includes:
- 30 mm PVC spiral hose 1.5 metres long
- stainless steel suction filter
- spherical polyethylene float
- hose fittings Ø 30 mm

 ※ **Start of production with new color 03.2024** ※

CURVES AND PERFORMANCE DATA

50 Hz

TOP MULTI 1-2-4 EVO

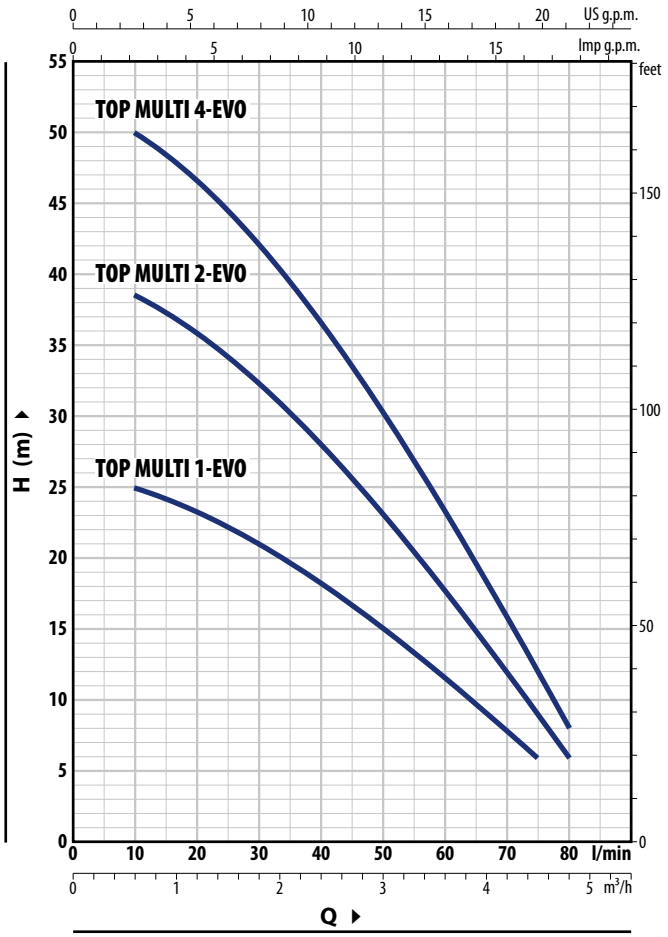

TOP MULTI 3-5 EVO

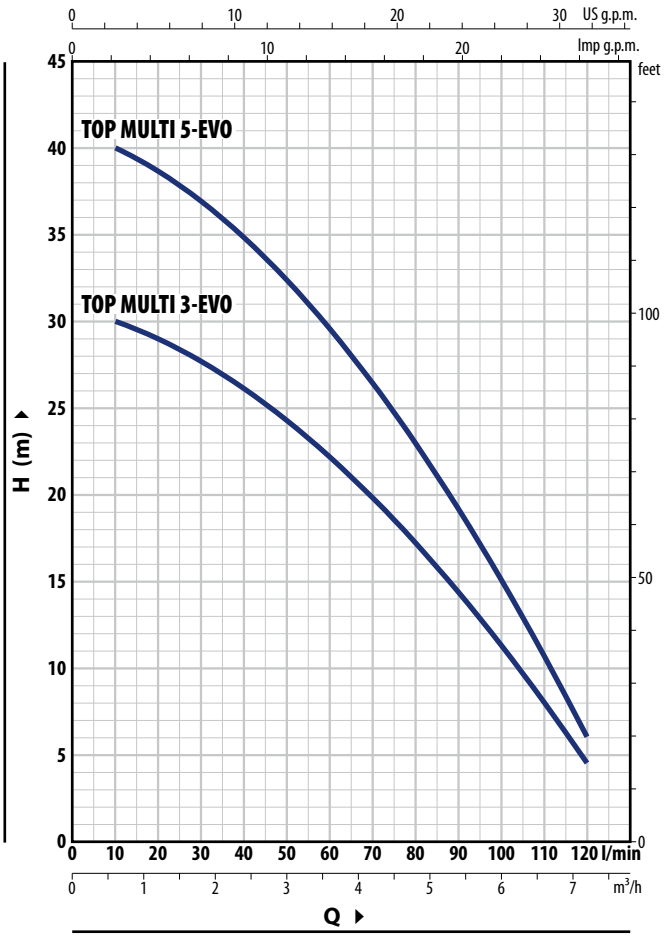

TOP MULTI 1-2-4 EVO

TYPE	POWER (P2)		Q m³/h	0	0.6	1.2	1.8	2.4	3.0	3.6	4.2	4.5	4.8
Single-phase	**kW**	**HP**	Q l/min	**0**	**10**	**20**	**30**	**40**	**50**	**60**	**70**	**75**	**80**
TOP MULTI 1-EVO	0.37	0.50		26	25	23.3	21	18.3	15	11.6	8	6	
TOP MULTI 2-EVO	0.55	0.75	**H** metres	40	38.5	36	32.5	28	23	17.7	12	9	6
TOP MULTI 4-EVO	0.75	1		52	50	46.5	42	36.5	30.5	23.3	15.8	12	8

TOP MULTI 3-5 EVO

TYPE	POWER (P2)		Q m³/h	0	0.6	1.2	1.8	2.4	3.0	3.6	4.2	4.8	5.4	6.0	6.6	7.2
Single-phase	**kW**	**HP**	Q l/min	**0**	**10**	**20**	**30**	**40**	**50**	**60**	**70**	**80**	**90**	**100**	**110**	**120**
TOP MULTI 3-EVO	0.55	0.75	**H** metres	30.5	30	29	27.5	26	24.3	22.2	19.8	17.2	14.4	11.3	8	4.5
TOP MULTI 5-EVO	0.75	1		41	40	38.5	37	35	32.5	29.5	26.5	23	19.2	15	10.7	6

Q = Flow rate **H** = Total manometric head

Performance curves comply with EN ISO 9906 Grade 3B tolerance limits.

ABSORPTION

TYPE	VOLTAGE
Single-phase	**230 V**
TOP MULTI 1-EVO	2.0 A
TOP MULTI 2-EVO	3.4 A
TOP MULTI 3-EVO	3.6 A
TOP MULTI 4-EVO	3.9 A
TOP MULTI 5-EVO	3.9 A

INSTALLATION EXAMPLES

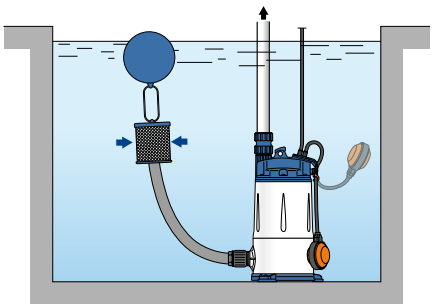

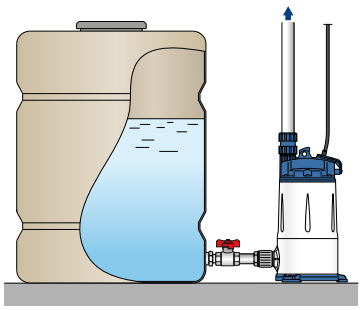

DIMENSIONS AND WEIGHT

TOP MULTI 1 EVO

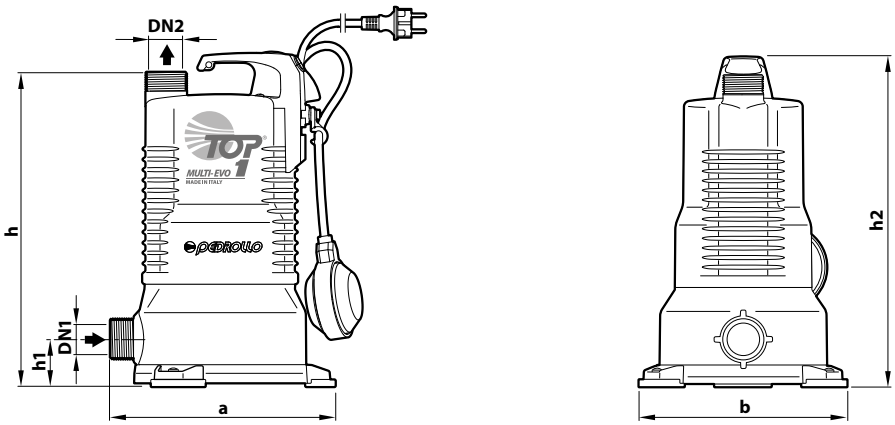

TOP MULTI 2-3-4-5 EVO

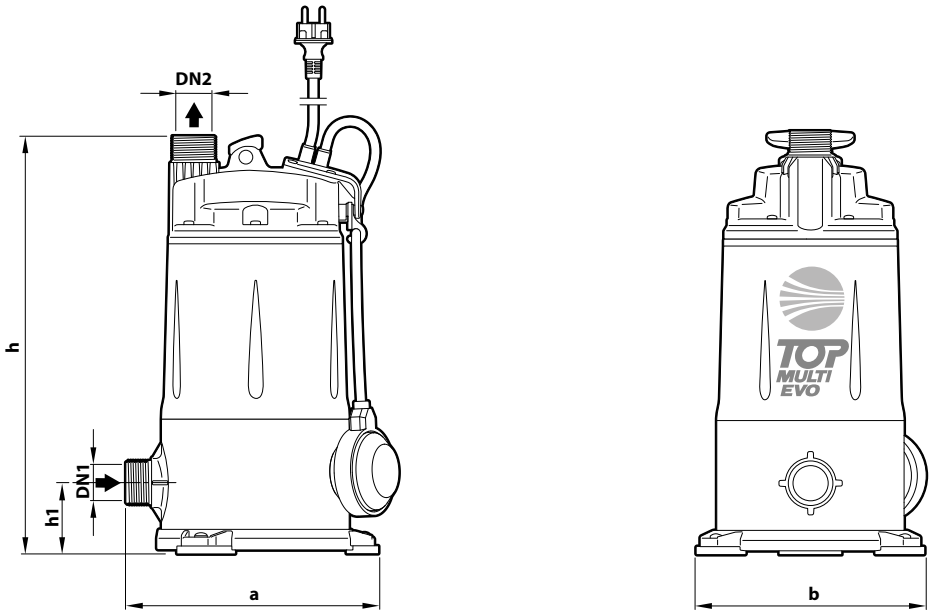

TYPE	PORTS		NO. STAGES	DIMENSIONS mm					kg
	DN1	DN2		a	b	h	h1	h2	
TOP MULTI 1-EVO	1¼"	1¼"	2	227	210	317	49	337	7.1
TOP MULTI 2-EVO			3	239	216	394	68	–	9.9
TOP MULTI 3-EVO									9.9
TOP MULTI 4-EVO			4			428			10.4
TOP MULTI 5-EVO									10.4

PALLET CAPACITY

TYPE	NO. OF PUMPS
TOP MULTI 1-EVO	45
TOP MULTI 2-EVO	45
TOP MULTI 3-EVO	45
TOP MULTI 4-EVO	45
TOP MULTI 5-EVO	45

TOP MULTI 1 EVO

MATERIALS AND COMPONENTS

1	**Pump body**	Technopolymer
2	**Base**	Technopolymer
3	**Containment stages**	Technopolymer
4	**Impellers**	Noryl™
5	**Diffusers and stage boxes**	Noryl™
6	**Motor sleeve**	Stainless steel **AISI 304**
7	**Motor cover**	Stainless steel **AISI 304**
8	**Motor shaft**	Stainless steel **AISI 431**
9	**Mechanical seal**	**STA-12R** Ceramic/Graphite/NBR
10	**Shaft seal**	Ø 12 x Ø 19 x H 5 mm
11	**Capacitor**	
12	**Electric motor**	
13	**Handle group** Including: - Float switch - Power cable with Schuko plug	
14	**Ferrule and hose nozzle**	
	Sleeve With built-in clapet valve	
15	**Anti-vibration feet**	

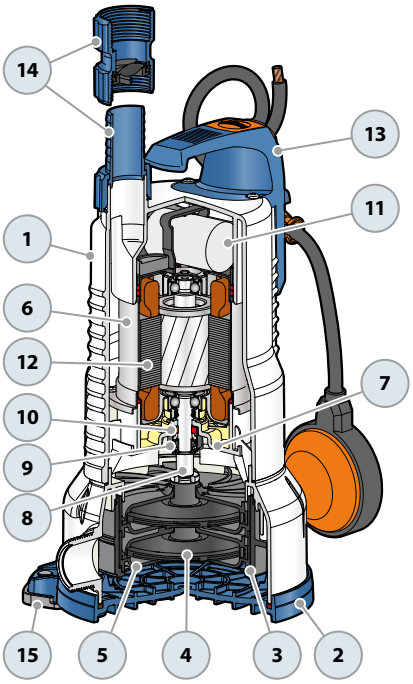

TOP MULTI 2-3-4-5 EVO

MATERIALS AND COMPONENTS

1	**Delivery port**	Technopolymer
2	**Suction body**	Technopolymer
3	**Base**	Technopolymer
4	**Diffuser vanes**	Technopolymer
5	**Motor sleeve**	Stainless steel **AISI 304**
6	**Impellers**	Noryl™
7	**Diffusers and stage boxes**	Noryl™
8	**Motor shaft**	Stainless steel **AISI 431**
9	**Double mechanical seal** **STA-13R** Motor side Ceramic/Graphite/NBR **STA-13R SIC** Pump side SIC/Graphite/NBR	
10	**Capacitor**	
11	**Electric motor**	
12	**Power cable** with Schuko plug	
13	**Float switch**	
14	**Ferrule and hose nozzle**	
	Sleeve With built-in clapet valve	
15	**Anti-vibration feet**	

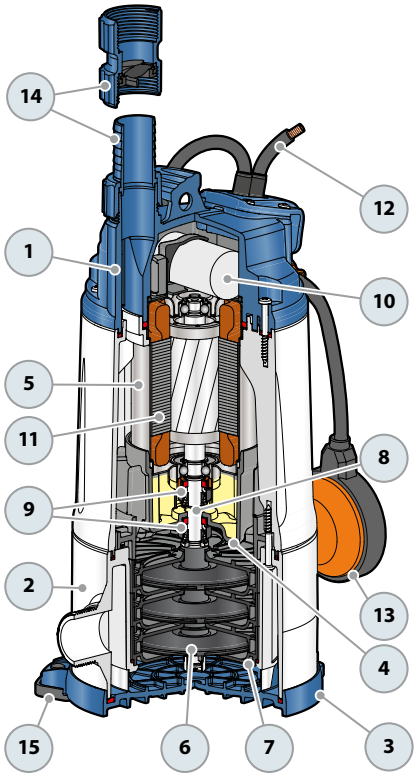

TOP MULTI-TECH Automatic submersible pumps

Clean water

Domestic use

Civil use

※ AUTOMATIC START & STOP

The integrated electronic device allows the pump to be started or stopped automatically by opening or closing the tap.

PERFORMANCE RANGE

- Flow rate up to **120 l/min** (7.2 m^3/h)
- Head up to **52 m**
- Restart pressure:
  - **1.5 bar** for TOP MULTI-TECH 2-3-5
  - **2.5 bar** for TOP MULTI-TECH 4

INSTALLATION AND USE

TOP-MULTI-TECH pumps are designed to transfer **clean water** free from abrasive particles and liquids that will not damage the pump's components. Efficient and reliable, they are ideal for domestic applications involving tanks, reservoirs, and deep wells. They are also perfect for collecting rainwater from water tanks (rain barrels) for manual watering or irrigation systems.

ELECTRONIC DEVICE

TOP MULTI-TECH pumps feature an internal electronic device that activates the pump if system pressure (such as when a tap opens) falls below **1.5 bar** (or **2.5 bar** for TOP MULTI-TECH 4) and deactivates it when flow declines to less than 3 l/min.

※ Protects the pump:
- **against dry running;**
- **to prevent blockages, the electronic device automatically runs the pump for 10 seconds every 48 hours after extended periods of inactivity.**

APPLICATION LIMITS

- Maximum operating depth below water level up to **5 m**
- Maximum height between pump and user: **10 m**
- Liquid temperature up to **+40 °C**
- Draining capability up to **35 mm** from the bottom

INCLUDES

※ **10 m** power cable
※ Threaded fitting 1¼"
※ Hose connector **Ø 35 mm**

PATENTS - TRADE MARKS - MODELS

- Patent No. EP2990653
- TOP MULTI® Registered trademark No. 0001334477

 ※ **Start of production with new color 03.2024** ※

CURVES AND PERFORMANCE DATA

50 Hz

TOP MULTI-TECH 2-4

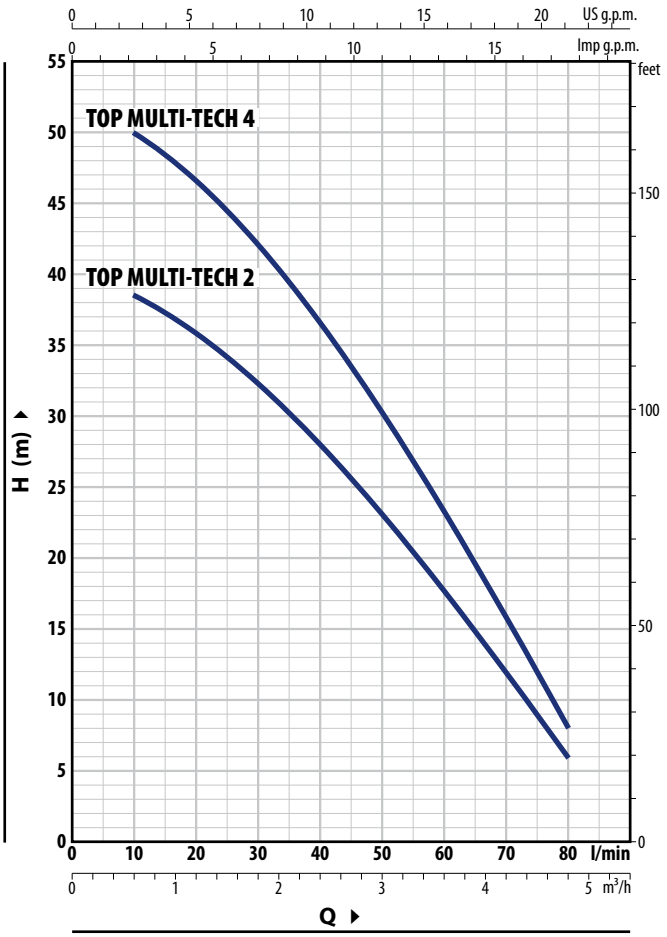

TOP MULTI-TECH 3-5

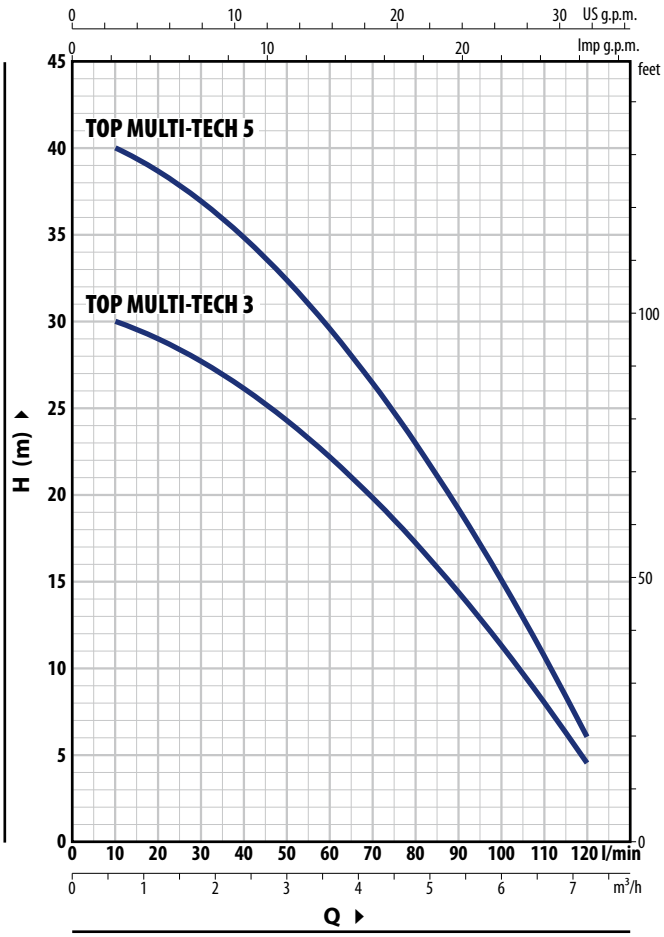

TOP MULTI-TECH 2-4

TYPE	POWER (P2)		Q m³/h	0	0.6	1.2	1.8	2.4	3	3.6	4.2	4.5	4.8
Single-phase	**kW**	**HP**	Q l/min	**0**	**10**	**20**	**30**	**40**	**50**	**60**	**70**	**75**	**80**
TOP MULTI-TECH 2	0.55	0.75	H metres	40	38.5	36	32.5	28	23	17.7	12	9	6
TOP MULTI-TECH 4	0.75	1		52	50	46.5	42	36.5	30.5	23.3	15.8	12	8

TOP MULTI-TECH 3-5

TYPE	POWER (P2)		Q m³/h	0	0.6	1.2	1.8	2.4	3	3.6	4.2	4.5	4.8	5.4	6	6.6	7.2
Single-phase	**kW**	**HP**	Q l/min	**0**	**10**	**20**	**30**	**40**	**50**	**60**	**70**	**75**	**80**	**90**	**100**	**110**	**120**
TOP MULTI-TECH 3	0.55	0.75	H metres	30.5	30	29	27.5	26	24.3	22.2	19.8	18.5	17.2	14.4	11.3	8	4.5
TOP MULTI-TECH 5	0.75	1		41	40	38.5	37	35	32.5	29.5	26.5	24.7	23	19.2	15	10.7	6

Q = Flow rate **H** = Total manometric head

Performance curves comply with EN ISO 9906 Grade 3B tolerance limits.

ABSORPTION

TYPE	VOLTAGE
Single-phase	**230 V**
TOP MULTI-TECH 2	3.4 A
TOP MULTI-TECH 3	3.6 A
TOP MULTI-TECH 4	3.9 A
TOP MULTI-TECH 5	3.9 A

DIMENSIONS AND WEIGHT

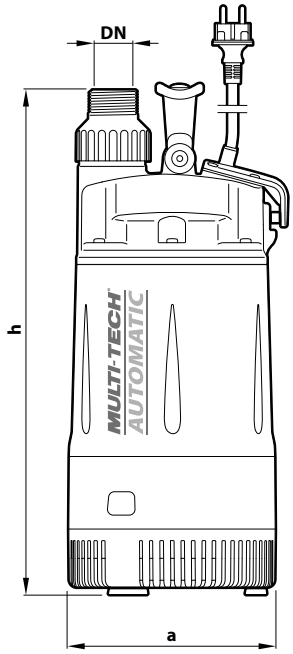

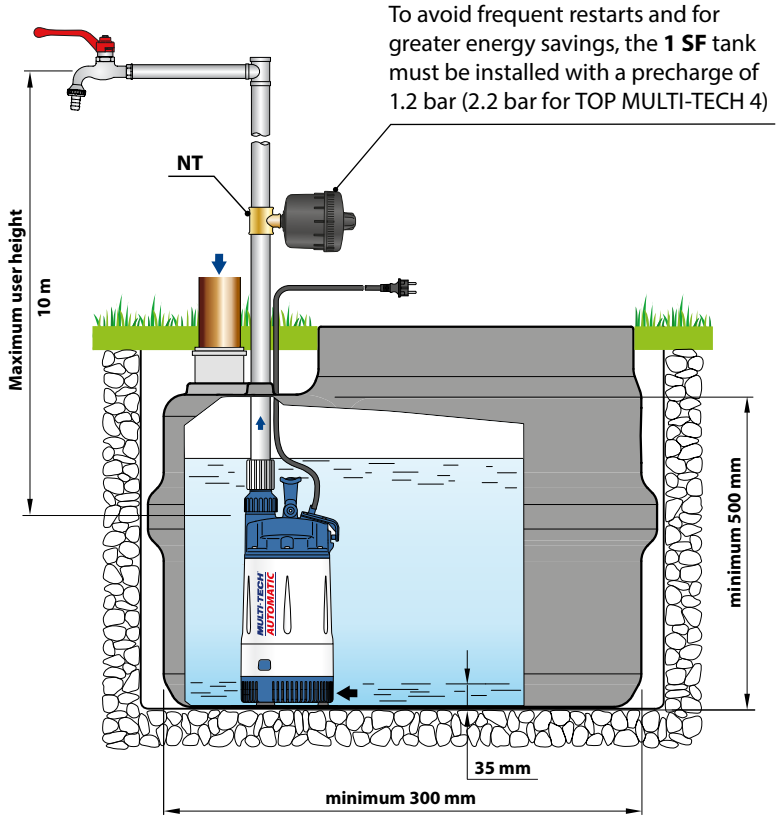

TYPE	PORT DN	DIMENSIONS mm a	h	kg
TOP MULTI-TECH 2	**1¼"**	178	428	9.5
TOP MULTI-TECH 3				
TOP MULTI-TECH 4			463	10.5
TOP MULTI-TECH 5				

Typical installation

PALLET CAPACITY

TYPE	NO. OF PUMPS
TOP MULTI-TECH 2	60
TOP MULTI-TECH 3	60
TOP MULTI-TECH 4	40
TOP MULTI-TECH 5	40

ACCESSORIES (CAN BE ORDERED SEPARATELY)

TYPE	Code	FITTING	CAPACITY	PRECARE	MAXIMUM WORKING PRESSURE
※ Tank **1 SF**	50057005	½" (male)	1 litre	1.2 bar	10 bar
3-way fitting **NT 1.25**	500160001	1¼" - 1¼" - ½" gas	–	–	–

MATERIALS AND COMPONENTS

1	**Delivery port**	Technopolymer
2	**Pump body**	Technopolymer
3	**Suction filter**	Technopolymer
4	**Diffuser vanes**	Technopolymer
5	**Motor sleeve**	Stainless steel **AISI 304**
6	**Impellers**	Noryl™
7	**Diffusers and stage boxes**	Noryl™
8	**Motor shaft**	Stainless steel **AISI 431**
9	**Electronic device**	

10 **Double mechanical seal with interposed oil chamber**

Seal	Shaft	Location	Materials
STA-13R	Ø 13 mm	Motor side	Ceramic / Graphite /NBR
STA-13R SIC	Ø 13 mm	Pump side	Silicon carbide / Graphite /NBR

11 **Capacitor**

12 **Electric motor**

TOP MULTI-TECH: single-phase 230 V - 50 Hz with winding integrated thermal motor protection.

- Continuous running duty S1
- Insulation: Class F
- Protection rating: IP X8

13 **Power cord**
Type 'H07 RN-F' with Schuko plug

※ Standard length 10 metres

14 **Threaded connection 1¼"**

15 **Ferrule and hose connector Ø 35 mm**

16 **Anti-vibration feet**

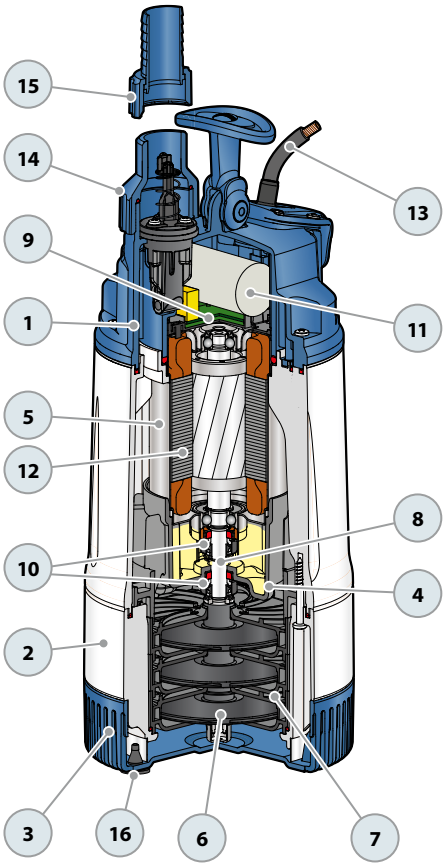

TOP MULTI-EVOTECH

Automatic submersible pumps

Clean water

Domestic use

Civil use

※ AUTOMATIC START & STOP

The integrated electronic device automatically starts or stops the pump when the tap is opened or closed.

PERFORMANCE RANGE

- Flow rate up to **120 l/min** (7.2 m^3/h)
- Head up to **52 m**
- Restart pressure:
  - **1.5 bar** for TOP MULTI-EVOTECH 2-3-5
  - **2.5 bar** for TOP MULTI-EVOTECH 4

INSTALLATION AND USE

TOP MULTI-EVOTECH pumps are designed to transfer **clean water** free from abrasive particles and liquids that will not damage the pump's components. Efficient and reliable, they are ideal for domestic applications involving tanks, reservoirs, and deep wells. They are also perfect for collecting rainwater from water tanks (rain barrels) for manual watering or irrigation systems.

ELECTRONIC DEVICE

TOP MULTI-EVOTECH pumps feature an internal electronic device that activates the pump if system pressure (such as when a tap opens) falls below **1.5 bar** (or **2.5 bar** for TOP MULTI-EVOTECH 4) and deactivates it when flow declines to less than 3 l/min.

※ Protects the pump:
- **against dry running;**
- **to prevent blockages, the electronic device automatically runs the pump for 10 seconds every 48 hours after extended periods of inactivity.**

APPLICATION LIMITS

- Maximum operating depth below water level up to **5 m**
- Maximum height between pump and utility **10 m**
- Liquid temperature up to **+40 °C**
- Draining capability up to **35 mm** from the bottom

INCLUDES

※ **10 m** power cable
※ Threaded connection 1¼" (delivery)
※ Hose connector Ø 35 mm

AVAILABLE UPON REQUEST

※ Different voltage requirements 60 Hz frequency

※ **KGE - Floating suction kit**

The KGE kit enables suction about 10 cm below the water surface, avoiding floating debris and sediment, thereby protecting the pump from damage.

Includes:
- 30 mm PVC spiral hose 1.5 metres long
- stainless steel suction filter
- spherical polyethylene float
- hose fittings Ø 30 mm

PATENTS - TRADE MARKS - MODELS

- Patent No. EP2990653
- TOP MULTI® Registered trademark No. 0001334477

 ※ **Start of production with new color 03.2024** ※

CURVES AND PERFORMANCE DATA

50 Hz

TOP MULTI-EVOTECH 2-4

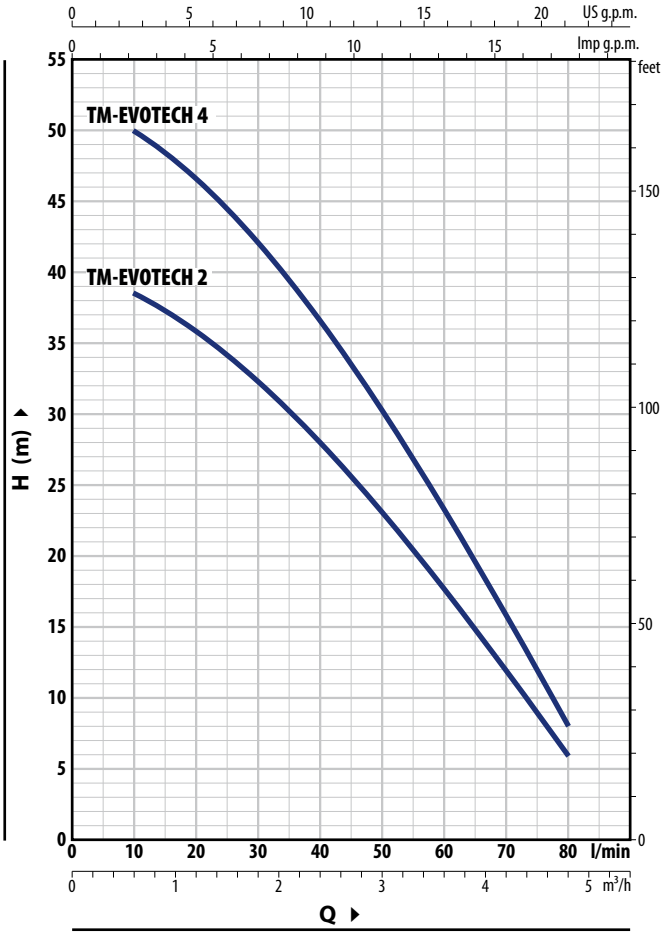

TOP MULTI-EVOTECH 3-5

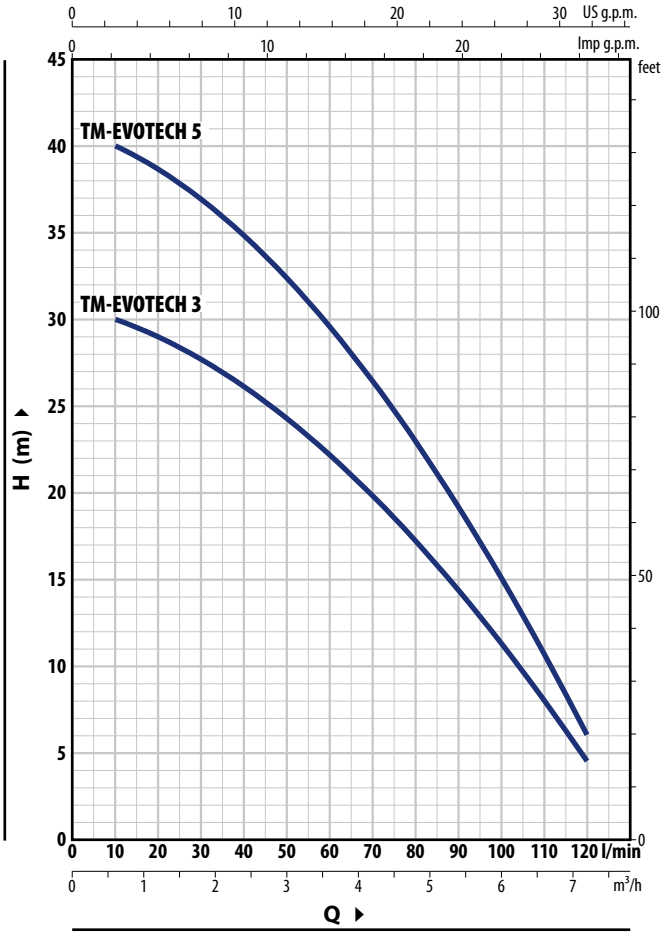

TOP MULTI-EVOTECH 2-4

TYPE	POWER (P2)		Q m³/h	0	0.6	1.2	1.8	2.4	3	3.6	4.2	4.5	4.8
Single-phase	**kW**	**HP**	Q l/min	**0**	**10**	**20**	**30**	**40**	**50**	**60**	**70**	**75**	**80**
TOP MULTI-EVOTECH 2	0.55	0.75	H metres	40	38.5	36	32.5	28	23	17.7	12	9	6
TOP MULTI-EVOTECH 4	0.75	1		52	50	46.5	42	36.5	30.5	23.3	15.8	12	8

TOP MULTI-EVOTECH 3-5

TYPE	POWER (P2)		Q m³/h	0	0.6	1.2	1.8	2.4	3	3.6	4.2	4.5	4.8	5.4	6	6.6	7.2
Single-phase	**kW**	**HP**	Q l/min	**0**	**10**	**20**	**30**	**40**	**50**	**60**	**70**	**75**	**80**	**90**	**100**	**110**	**120**
TOP MULTI-EVOTECH 3	0.55	0.75	H metres	30.5	30	29	27.5	26	24.3	22.2	19.8	18.5	17.2	14.4	11.3	8	4.5
TOP MULTI-EVOTECH 5	0.75	1		41	40	38.5	37	35	32.5	29.5	26.5	24.7	23	19.2	15	10.7	6

Q = Flow rate **H** = Total manometric head

Performance curves comply with EN ISO 9906 Grade 3B tolerance limits.

ABSORPTION

TYPE	VOLTAGE
Single-phase	**230 V**
TOP MULTI-EVOTECH 2	3.4 A
TOP MULTI-EVOTECH 3	3.6 A
TOP MULTI-EVOTECH 4	3.9 A
TOP MULTI-EVOTECH 5	3.9 A

DIMENSIONS AND WEIGHT

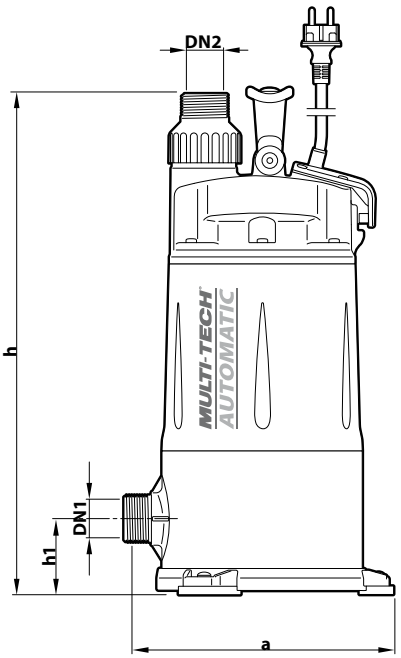

Typical installation

To avoid frequent restarts and for greater energy savings, the **1 SF** tank must be installed with a precharge of 1.2 bar (2.2 bar for TOP MULTI-EVOTECH 4)

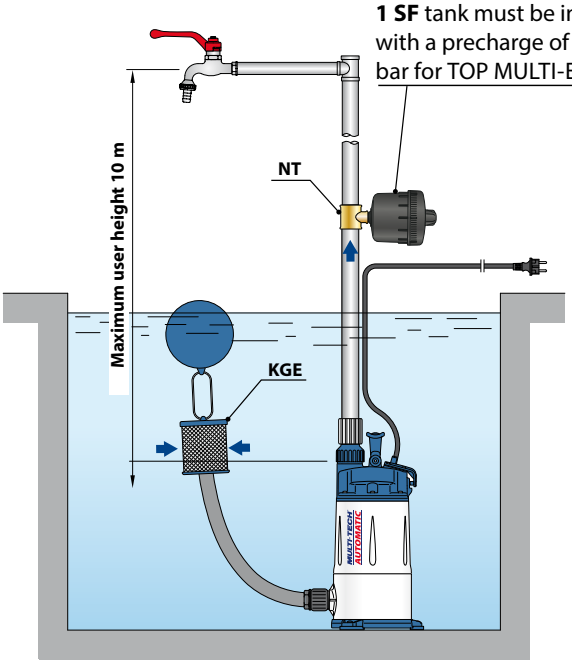

TYPE	PORTS		NO. STAGES	DIMENSIONS mm			kg
	DN1	DN2		a	h	h1	
TOP MULTI-EVOTECH 2	**1¼"**	**1¼"**	**3**	239	442	68	9.9
TOP MULTI-EVOTECH 3							9.9
TOP MULTI-EVOTECH 4			**4**		476		11.0
TOP MULTI-EVOTECH 5							11.0

ACCESSORIES (CAN BE ORDERED SEPARATELY)

TYPE	Code	FITTING	CAPACITY	PRECARE	MAXIMUM WORKING PRESSURE
※ Tank **1 SF**	50057005	½" (male)	1 litre	1.2 bar	10 bar
3-way fitting **NT 1.25**	500160001	1¼" - 1¼" - ½" gas	–	–	–

PALLET CAPACITY

TYPE	NO. OF PUMPS
TOP MULTI-EVOTECH 2	45
TOP MULTI-EVOTECH 3	45
TOP MULTI-EVOTECH 4	45
TOP MULTI-EVOTECH 5	45

MATERIALS AND COMPONENTS

1	**Delivery port**	Technopolymer with ISO 228/1 threaded port
2	**Suction body**	Technopolymer with ISO 228/1 threaded port
3	**Base**	Technopolymer
4	**Diffuser vanes**	Technopolymer
5	**Motor sleeve**	Stainless steel **AISI 304**
6	**Impellers**	Noryl™
7	**Diffusers and stage boxes**	Noryl™
8	**Motor shaft**	Stainless steel **AISI 431**
9	**ELECTRONIC DEVICE**	

10 Double mechanical seal with interposed oil chamber

Seal	Shaft	Location	Materials
STA-13R	Ø 13 mm	Motor side	Ceramic / Graphite /NBR
STA-13R SIC	Ø 13 mm	Pump side	Silicon carbide / Graphite /NBR

11 Capacitor

12 Electric motor

TOP MULTI-EVOTECH: single-phase 230 V - 50 Hz with winding integrated thermal motor protection.

- Continuous running duty S1
- Insulation: Class F
- Protection rating: IP X8

13 Power cord
Type 'H07 RN-F' with Schuko plug

※ Standard length 10 metres

14 Threaded connection 1¼"

15 Ferrule and hose connector Ø 35 mm

16 Anti-vibration feet

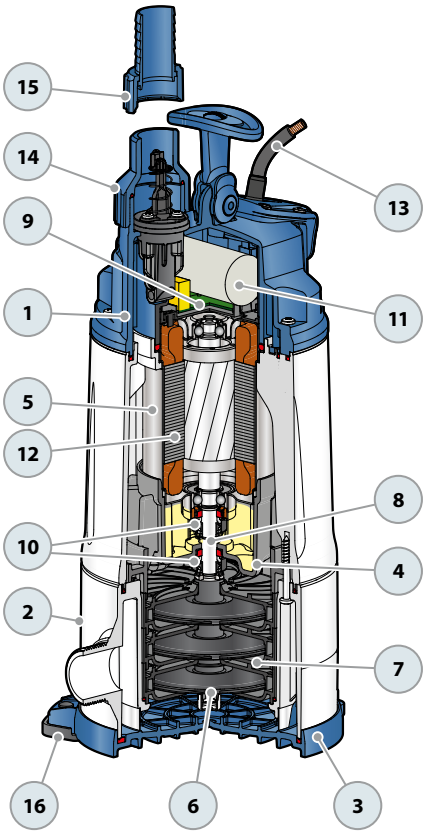

UP Multi-stage submersible pumps

Clean water

Domestic use

Civil use

Agricultural use

PERFORMANCE RANGE

- Flow rate up to **180 l/min** (10.8 m^3/h)
- Head up to **97 m**

INSTALLATION AND USE

A series of multi-impeller submersible pumps engineered for enhanced reliability, thanks to innovative patented solutions that prevent stalling even after prolonged periods of inactivity.

Highly efficient and reliable, these pumps are ideal for various applications, including water distribution in domestic, civil, and agricultural settings, particularly for water distribution in conjunction with pressure tanks, for irrigation, pressure boosting, and more.

APPLICATION LIMITS

- Liquid temperature up to **+40 °C**
- Maximum sand content **150 g/m^3**
- Maximum operating depth below water level up to **20 m** (with an appropriately sized power cable)
- Vertical and horizontal operation

INCLUDES

※ Float switch (exclusive to single-phase models)
※ Power cable length **10 m**

AVAILABLE UPON REQUEST

※ Pumps without float switch
※ **20 m** or **30 m** power cables
※ Different voltage requirements 60 Hz frequency

※ **Support kit for horizontal operation**

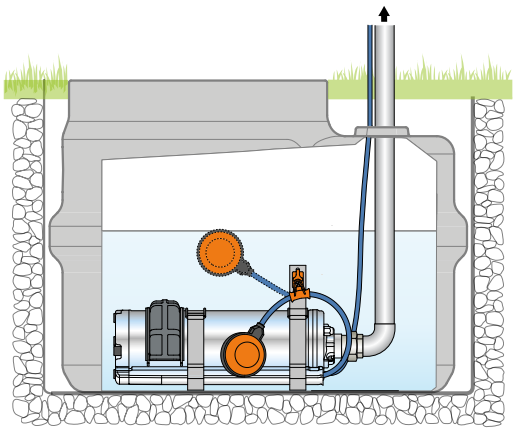

PATENTS - TRADE MARKS - MODELS

- Patent No. IT0001428923
- Patent No. EP2419642

CURVES AND PERFORMANCE DATA

50 Hz

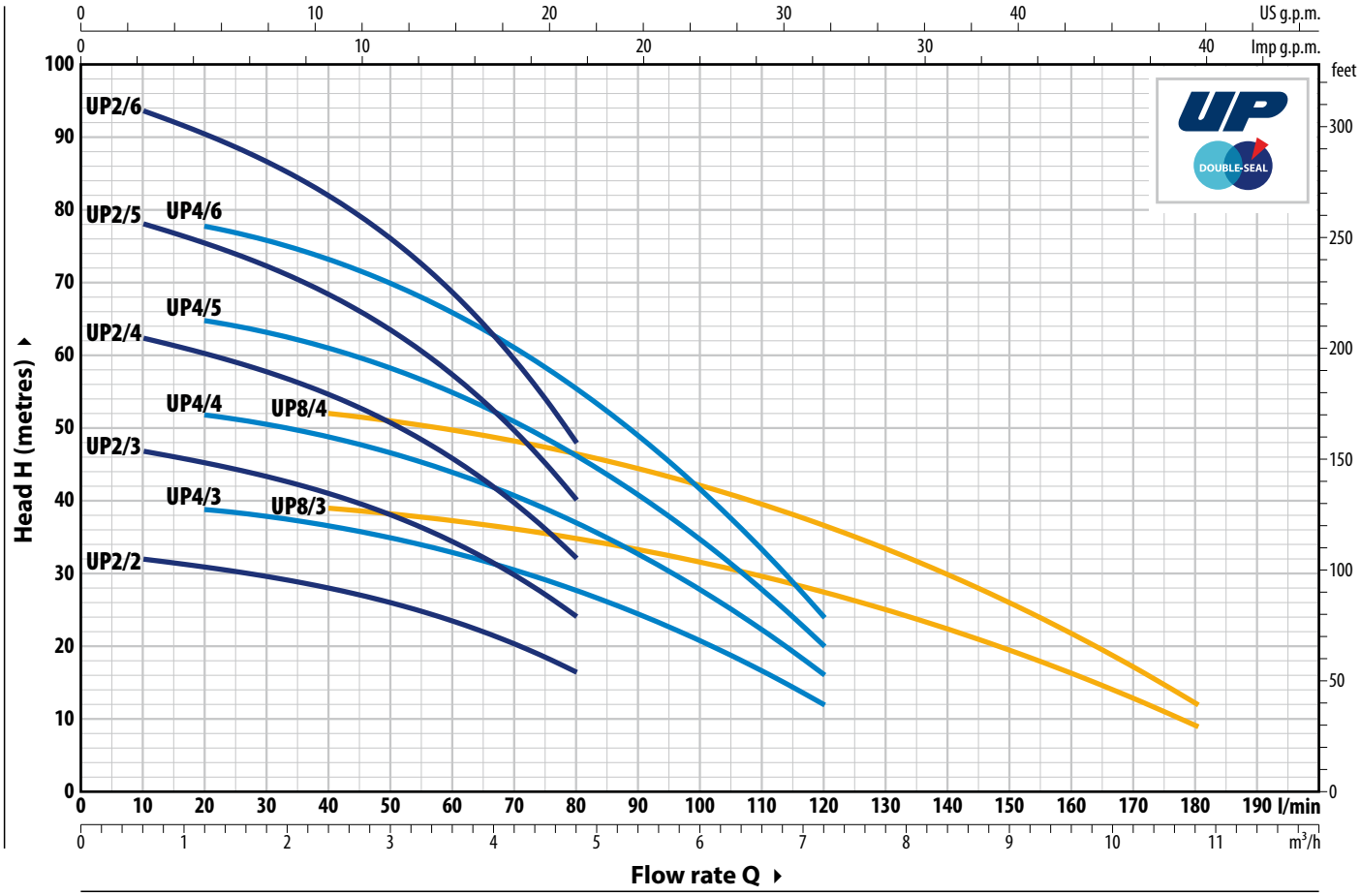

TYPE		POWER (P2)		Q m³/h	0	0.6	1.2	2.4	3.6	4.8	6.0	7.2	8.4	9.6	10.8
Single-phase	**Three-phase**	**kW**	**HP**	l/min	**0**	**10**	**20**	**40**	**60**	**80**	**100**	**120**	**140**	**160**	**180**
UPm 2/2-GE	–	0.37	0.5		33	32	31	28	23.5	16.4					
UPm 2/3-GE	**UP 2/3**	0.55	0.75		48.5	47	45	41	34.5	24					
UPm 2/4-GE	**UP 2/4**	0.75	1		64.5	62.5	60.5	54.5	46	32					
UPm 2/5-GE	**UP 2/5**	1.1	1.5		80	78	75	68.5	57	40					
UPm 2/6-GE	**UP 2/6**	1.5	2		97	94	90	82	68.5	48					
UPm 4/3-GE	**UP 4/3**	0.55	0.75	**H** metres	40	–	39	36.5	33	28	20.8	12			
UPm 4/4-GE	**UP 4/4**	0.75	1		53	–	52	49	44	37	28	16			
UPm 4/5-GE	**UP 4/5**	1.1	1.5		67	–	65	61	55	46.5	34.5	20			
UPm 4/6-GE	**UP 4/6**	1.5	2		80	–	78	73	66	55.5	41.5	24			
UPm 8/3-GE	**UP 8/3**	1.1	1.5		40.5	–	–	39	37.5	35	31.5	27.5	22.3	16.2	9
UPm 8/4-GE	**UP 8/4**	1.5	2		54	–	–	52	49.5	46.5	42	36.5	29.5	21.6	12

Q = Flow rate **H** = Total manometric head

Performance curves comply with EN ISO 9906 Grade 3B tolerance limits.

➠ **On request single-phase pumps without float switch**

ABSORPTION

TYPE	VOLTAGE
Single-phase	**230 V**
UPm 2/2-GE	4.4 A
UPm 2/3-GE	5.4 A
UPm 2/4-GE	6.2 A
UPm 2/5-GE	7.6 A
UPm 2/6-GE	8.8 A
UPm 4/3-GE	5.0 A
UPm 4/4-GE	6.2 A
UPm 4/5-GE	7.2 A
UPm 4/6-GE	8.7 A
UPm 8/3-GE	6.8 A
UPm 8/4-GE	8.5 A

TYPE	VOLTAGE
Three-phase	**400 V**
UP 2/3	**1.9** A
UP 2/4	2.3 A
UP 2/5	2.9 A
UP 2/6	3.3 A
UP 4/3	**1.8** A
UP 4/4	2.2 A
UP 4/5	2.8 A
UP 4/6	3.2 A
UP 8/3	2.7 A
UP 8/4	3.3 A

DIMENSIONS AND WEIGHT

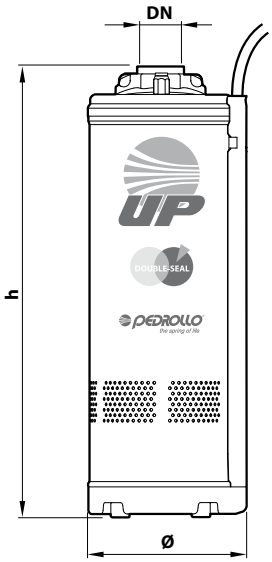

※ VERTICAL INSTALLATION

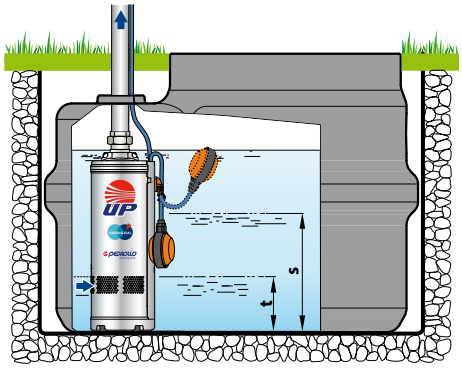

※ HORIZONTAL INSTALLATION

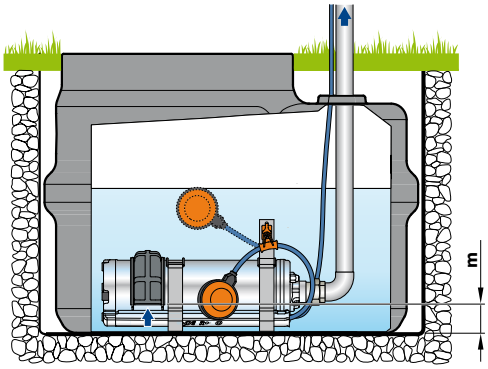

TYPE		PORT	DIMENSIONS mm		kg	
Single-phase	**Three-phase**	**DN**	Ø	h	1~	3~
UPm 2/2-GE	**–**	**1¼"**	150	384	12.8	12.5
UPm 2/3-GE	**UP 2/3**			411	13.1	13.3
UPm 2/4-GE	**UP 2/4**			468	14.9	14.0
UPm 2/5-GE	**UP 2/5**			495	16.5	15.3
UPm 2/6-GE	**UP 2/6**			542	18.0	16.7
UPm 4/3-GE	**UP 4/3**			411	13.2	12.9
UPm 4/4-GE	**UP 4/4**			468	14.8	13.4
UPm 4/5-GE	**UP 4/5**			495	16.4	15.3
UPm 4/6-GE	**UP 4/6**			542	18.1	16.9
UPm 8/3-GE	**UP 8/3**			441	15.2	14.2
UPm 8/4-GE	**UP 8/4**			488	17.0	15.8

TYPE	LEVELS mm		
	s	t	m
UP 2/2 **UP 2/3** **UP 4/3**	310	113	55
UP 2/4 **UP 2/5** **UP 4/4** **UP 4/5** **UP 8/3**	340		
UP 2/6 **UP 4/6** **UP 8/4**	360		

s = Minimum restart level
t = Draining capability
m = Minimum operating level

PALLET CAPACITY

TYPE		NO. OF PUMPS
Single-phase	**Three-phase**	
UPm 2/2-GE	**–**	30
UPm 2/3-GE	**UP 2/3**	30
UPm 2/4-GE	**UP 2/4**	30
UPm 2/5-GE	**UP 2/5**	25
UPm 2/6-GE	**UP 2/6**	25
UPm 4/3-GE	**UP 4/3**	30
UPm 4/4-GE	**UP 4/4**	30
UPm 4/5-GE	**UP 4/5**	25
UPm 4/6-GE	**UP 4/6**	25
UPm 8/3-GE	**UP 8/3**	30
UPm 8/4-GE	**UP 8/4**	30

MATERIALS AND COMPONENTS

1	**Outer sleeve**	**AISI 304** stainless steel with ISO 228/1 threaded delivery port
2	**Internal motor jacket**	Stainless steel **AISI 304**
3	**Impellers and diffusers**	Noryl™
4	**Diaphragms**	Stainless steel **AISI 304**
5	**Motor shaft**	Stainless steel **AISI 431**

6 Double mechanical seal with interposed oil chamber

Seal	Shaft	Location	Materials
STA-17	Ø 17 mm	Motor side	Ceramic / Graphite /NBR
ST1-16	Ø 16 mm	Pump side	Silicon carbide / Graphite / NBR

7 Capacitor

8 Electric motor

UPm: single-phase 230 V - 50 Hz with winding integrated thermal motor protection
UP: three-phase 400 V - 50 Hz

- Continuous running duty S1
- Insulation: Class F
- Protection rating: IP X8

9 Power cord

➠ **DRINCABLE®** type
approved for use in drinking water by **WRAS**
according to BS 6920, approval no. 7513

※ Standard length 10 metres

10 Automatic vent valve

11 Anti-vibration feet

12 Float switch
(exclusive to single-phase models)

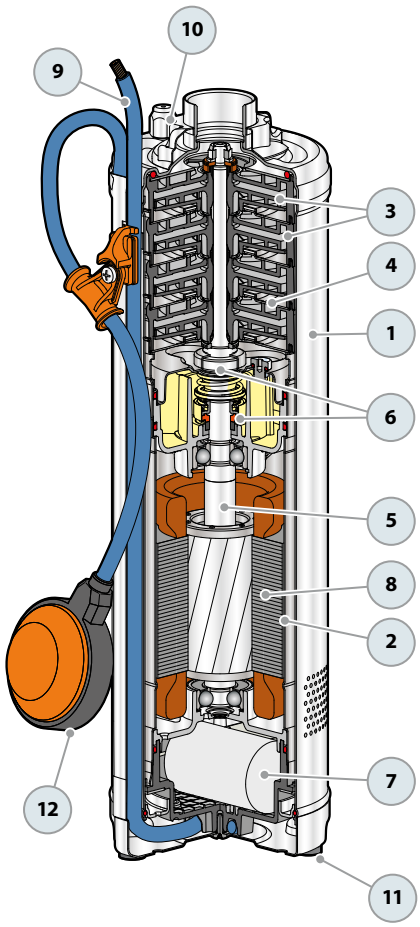

NK Multi-stage submersible pumps

- Clean water
- Domestic use
- Civil use
- Agricultural use

※ Designed to transfer clean water in domestic, agricultural, and civil settings. Optimal for tanks or reservoirs water supply and garden irrigation

PERFORMANCE RANGE

- Flow rate up to **160 l/min** (9.6 m^3/h)
- Head up to **97 m**

INSTALLATION AND USE

Designed for enhanced reliability with patented solutions to prevent stalling during extended periods of inactivity. Superb for various applications including domestic, civil, and agricultural sectors, water distribution with pressure tanks, irrigation, and enhancing water pressure.

INCLUDES

※ Float switch (exclusive to single-phase models)
※ Power cable length **10 m**

APPLICATION LIMITS

- Liquid temperature up to **+40 °C**
- Maximum sand content **150 g/m^3**
- Maximum operating depth below water level up to **20 m** (with an appropriately sized power cable)

AVAILABLE UPON REQUEST

※ Other power cable lengths available
※ Different voltage requirements 60 Hz frequency

PATENTS - TRADE MARKS - MODELS

- Patent No. IT0001428923

Vertical Installation

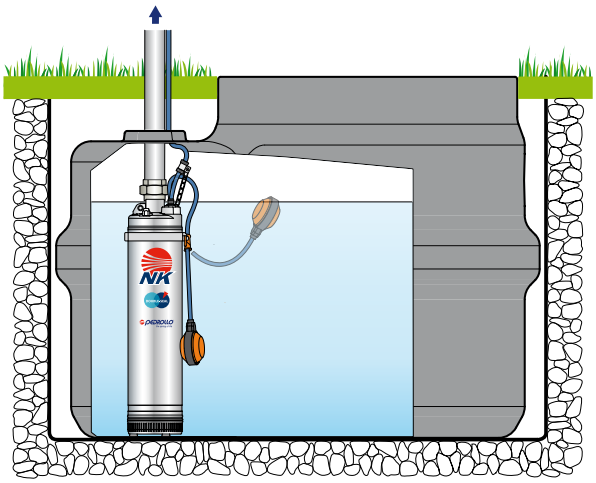

CURVES AND PERFORMANCE DATA

50 Hz

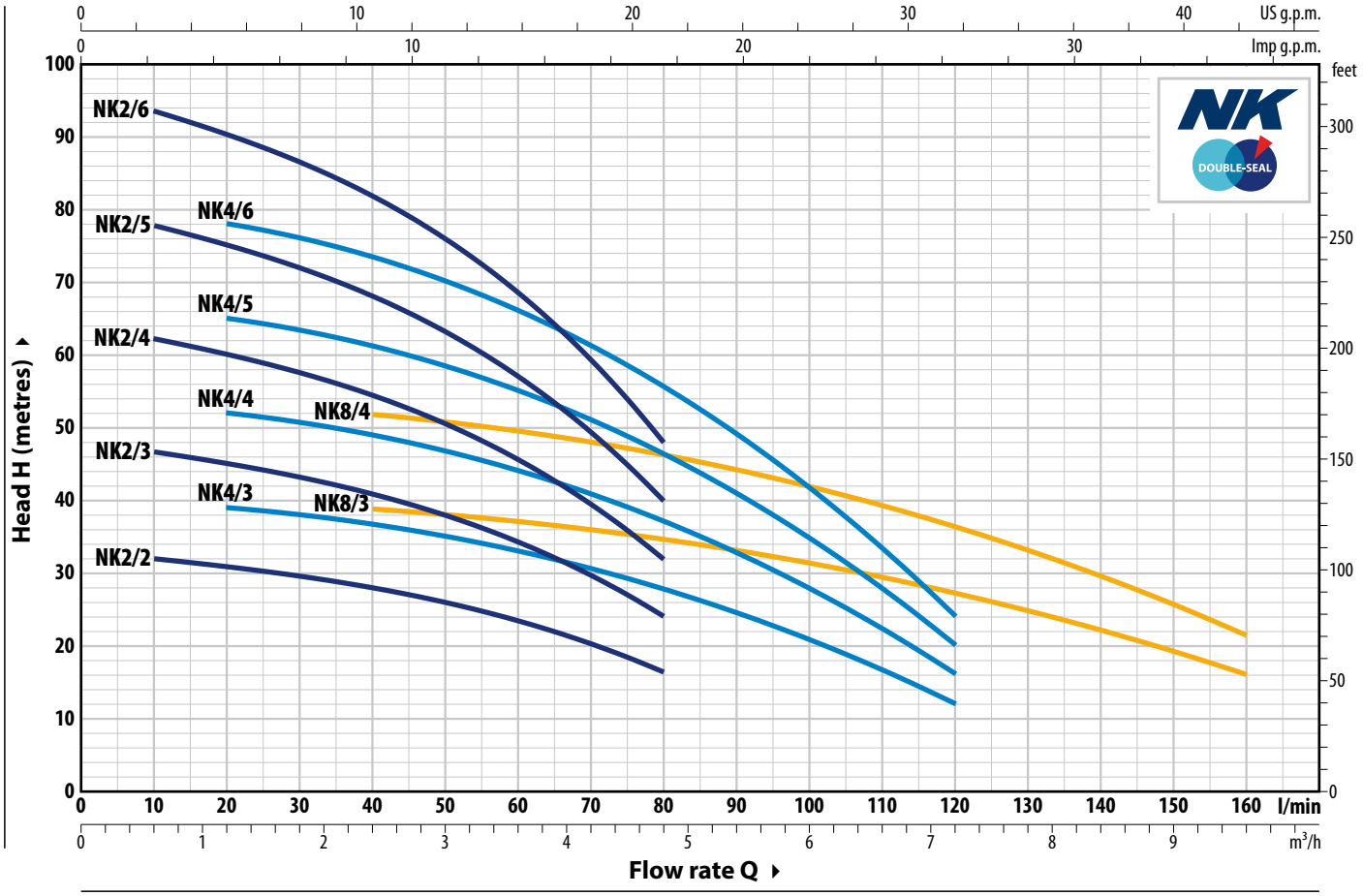

TYPE		POWER (P2)		Q m³/h	0	0.6	1.2	2.4	3.0	3.6	4.2	4.8	6.0	6.6	7.2	8.4	9.6
Single-phase	**Three-phase**	**kW**	**HP**	l/min	**0**	**10**	**20**	**40**	**50**	**60**	**70**	**80**	**100**	**110**	**120**	**140**	**160**
NKm 2/2 GE	–	0.37	0.5		33	32	31	28	26	23.5	20.3	16.4					
NKm 2/3 GE	**NK 2/3**	0.55	0.75		48.5	47	45	41	38	34.5	29.5	24					
NKm 2/4 GE	**NK 2/4**	0.75	1		64.5	62.5	60.5	54.5	50.5	46	39.5	32					
NKm 2/5 GE	**NK 2/5**	1.1	1.5		80	78	75	68.5	63.5	57	49.5	40					
NKm 2/6 GE	**NK 2/6**	1.5	2		97	94	90	82	76	68.5	59.5	48					
NKm 4/3 GE	**NK 4/3**	0.55	0.75	**H** metres	40	39.5	39	36.5	35	33	30.5	28	20.8	16.6	12		
NKm 4/4 GE	**NK 4/4**	0.75	1		53	53	52	49	46.5	44	41	37	28	22.2	16		
NKm 4/5 GE	**NK 4/5**	1.1	1.5		67	66	65	61	58.5	55	51	46.5	34.5	27.5	20		
NKm 4/6 GE	**NK 4/6**	1.5	2		80	79	78	73	70	66	61	55.5	41.5	33.5	24		
NKm 8/3 GE	**NK 8/3**	1.1	1.5		40.5	40.5	40	39	38	37.5	36	35	31.5	29.5	27.5	22.3	16.2
NKm 8/4 GE	**NK 8/4**	1.5	2		54	54	53.5	52	51	49.5	48	46.5	42	39.5	36.5	29.5	21.6

Q = Flow rate **H** = Total manometric head

Performance curves comply with EN ISO 9906 Grade 3B tolerance limits.

➠ **On request single-phase pumps without float switch**

ABSORPTION

TYPE **Single-phase**	VOLTAGE **230 V**
NKm 2/2 GE	4.3 A
NKm 2/3 GE	5.5 A
NKm 2/4 GE	6.2 A
NKm 2/5 GE	7.6 A
NKm2/6 GE	9.2 A
NKm 4/3 GE	5.0 A
NKm 4/4 GE	6.2 A
NKm 4/5 GE	7.5 A
NKm 4/6 GE	8.7 A
NKm 8/3 GE	7.1 A
NKm 8/4 GE	9.2 A

TYPE **Three-phase**	VOLTAGE **400 V**
NK 2/3	1.9 A
NK 2/4	2.3 A
NK 2/5	3.0 A
NK 2/6	3.4 A
NK 4/3	1.8 A
NK 4/4	2.2 A
NK 4/5	2.8 A
NK 4/6	3.2 A
NK 8/3	2.9 A
NK 8/4	3.4 A

DIMENSIONS AND WEIGHT

TYPE		PORT	DIMENSIONS mm		kg	
Single-phase	**Three-phase**	**DN**	Ø	h	1~	3~
NKm 2/2 GE	–			459	13.1	13.1
NKm 2/3 GE	**NK 2/3**			486	13.6	13.6
NKm 2/4 GE	**NK 2/4**			543	15.2	14.4
NKm 2/5 GE	**NK 2/5**			570	16.6	15.4
NKm 2/6 GE	**NK 2/6**			617	18.6	17.3
NKm 4/3 GE	**NK 4/3**	**1¼"**	**135**	486	13.7	13.5
NKm 4/4 GE	**NK 4/4**			543	15.2	14.1
NKm 4/5 GE	**NK 4/5**			570	16.7	15.5
NKm 4/6 GE	**NK 4/6**			617	18.0	17.8
NKm 8/3 GE	**NK 8/3**			516	15.5	14.4
NKm 8/4 GE	**NK 8/4**			563	17.5	16.3

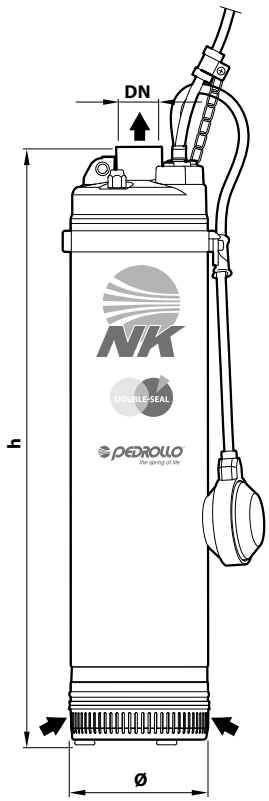

PALLET CAPACITY

TYPE		NO. OF PUMPS
Single-phase	**Three-phase**	
NKm 2/2 GE	–	30
NKm 2/3 GE	**NK 2/3**	30
NKm 2/4 GE	**NK 2/4**	25
NKm 2/5 GE	**NK 2/5**	25
NKm 2/6 GE	**NK 2/6**	25
NKm 4/3 GE	**NK 4/3**	30
NKm 4/4 GE	**NK 4/4**	25
NKm 4/5 GE	**NK 4/5**	25
NKm 4/6 GE	**NK 4/6**	25
NKm 8/3 GE	**NK 8/3**	30
NKm 8/4 GE	**NK 8/4**	25

MATERIALS AND COMPONENTS

1	**Outer sleeve**	**AISI 304** stainless steel, fitted with ISO 228/1 threaded delivery port
2	**Suction filter**	**AISI 304** stainless steel, complete with anti-vibration feet
3	**Motor sleeve**	Stainless steel **AISI 304**
4	**Impellers and diffusers**	Noryl™
5	**Diaphragms**	Stainless steel **AISI 304**
6	**Motor shaft**	Stainless steel **AISI 431**

7 Double mechanical seal with interposed oil chamber

Seal	Shaft	Location	Materials
STA-17	Ø 17 mm	Motor side	Ceramic / Graphite / NBR
ST1-16	Ø 16 mm	Pump side	Silicon carbide / Graphite / NBR

8 Capacitor

9 Electric motor

NKm: single-phase 230 V - 50 Hz with winding integrated thermal motor protection
NK: three-phase 400 V - 50 Hz

- Continuous running duty S1
- Insulation: Class F
- Protection rating IP X8

10 Power cord

➠ **DRINCABLE®** type
approved for use in drinking water by **WRAS**
according to BS 6920, approval no. 7513

※ Standard length 10 metres

11 Automatic vent valve

12 Anti-vibration feet

13 Float switch
(exclusive to single-phase models)

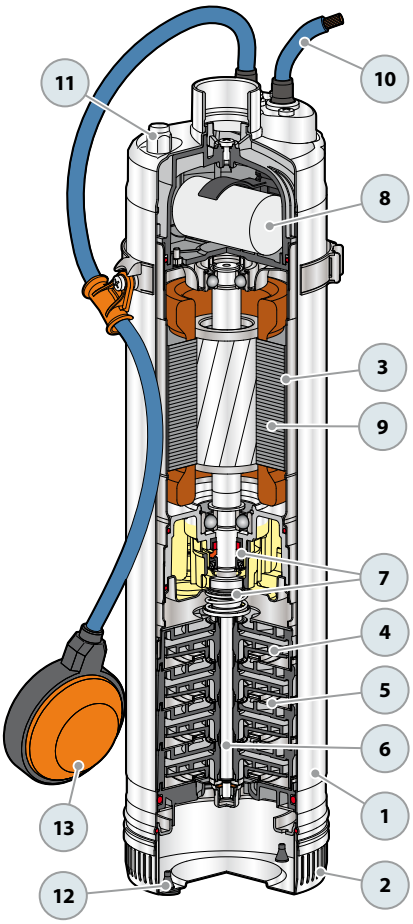

TOP Submersible pumps for DRAINAGE

Clear waters

Domestic use

※ **TOP**

Drainage pumps: reliable and durable

PERFORMANCE RANGE

- Flow rate up to **360 l/min** (21.6 m³/h)
- Head up to **15.5 m**

INSTALLATION AND USE

The **TOP** series is excellent for draining **clear water** without abrasive particles. Construction features ensure user-friendly and safe operation, including motor cooling and a double shaft seal. Recommended for emergency drainage of small, flooded areas (rooms, basements, garages), disposing of household water (dishwashers, washing machines), and emptying sumps.

APPLICATION LIMITS

- Liquid temperature up to +**40 °C** and up to **+90 °C** for short bursts (up to 3 minutes max) for intermittent service
- Capable of processing suspended solids up to **Ø 10 mm**
- Draining capability:
  - up to **14 mm** from the bottom for TOP 1-2-3
  - up to **30 mm** from the bottom for TOP 4-5
- Maximum operating depth below water level:
  - up to **3 m** for TOP 1-2-3
  - up to **5 m** for TOP 4-5
  (with an appropriately sized power cable)

PATENTS - TRADE MARKS - MODELS

- Patent No. IT0001428923
- Registered Community Model No. 342159-0011

INCLUDES

※ **5 m** power cable
※ Float switch

AVAILABLE UPON REQUEST

※ Mechanical seal options available
※ Different voltage requirements 60 Hz frequency
※ Power cable length **10 m**
※ **TOP-GM** " pumps with magnetic float operation (suitable for small sumps)

※ **TOP-LA"** special pumps with all metal components in contact with the pumped liquid in AISI 316 stainless steel

※ **TOP LA**

※ **TOP GM**

CURVES AND PERFORMANCE DATA

50 Hz

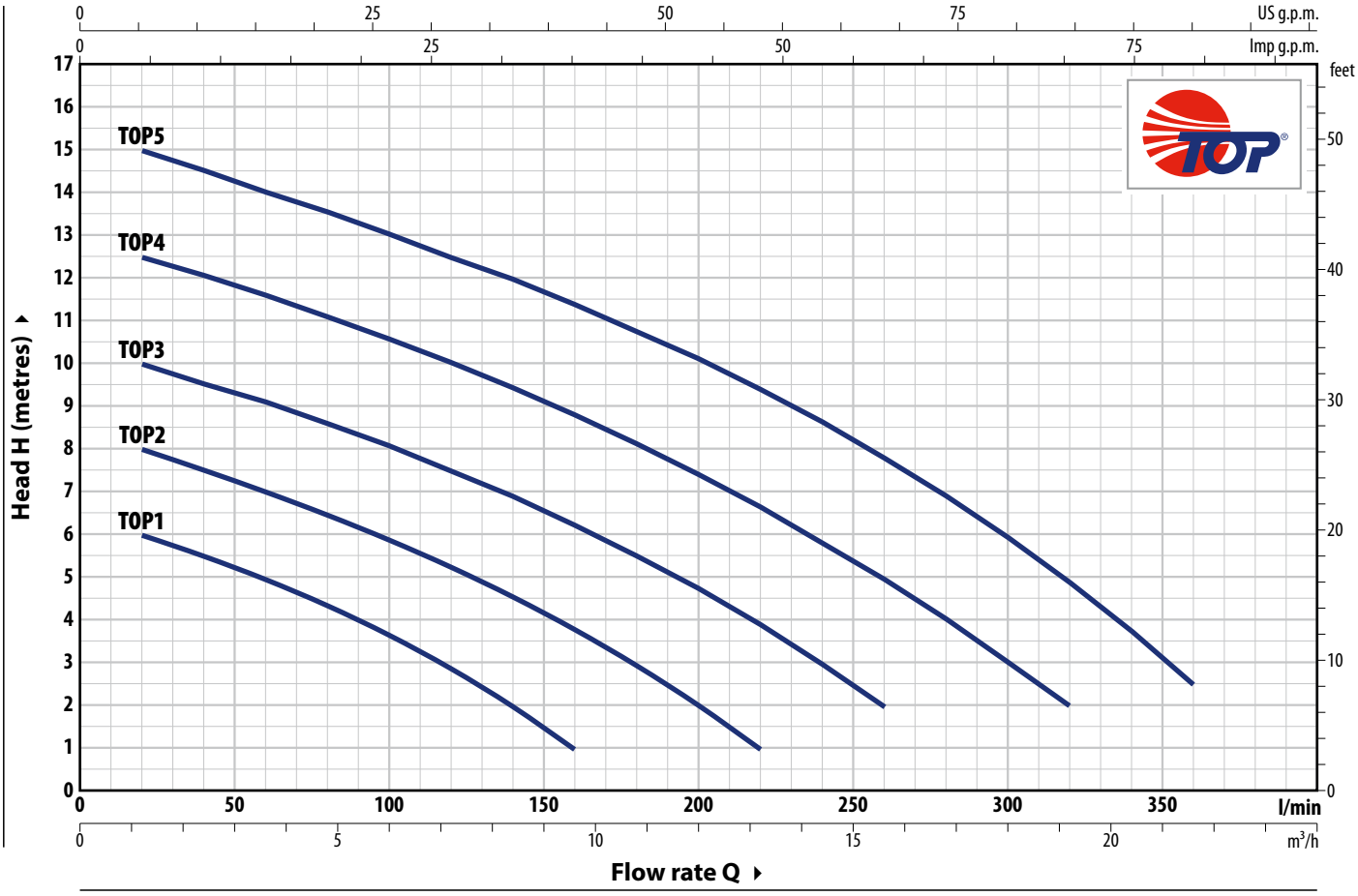

TYPE Single-phase	POWER (P2) kW	HP	Q m³/h	0	1.2	2.4	3.6	4.8	6.0	7.2	8.4	9.6	10.8	12.0	13.2	14.4	15.6	18.0	19.2	21.6
			Q l/min	**0**	**20**	**40**	**60**	**80**	**100**	**120**	**140**	**160**	**180**	**200**	**220**	**240**	**260**	**300**	**320**	**360**
TOP 1	0.25	0.33		6.5	6	5.5	5	4.4	3.7	3	2	1								
TOP 2	0.37	0.50		8.5	8	7.5	7	6.5	6	5.3	4.6	3.8	3	2	1					
TOP 3	0.55	0.75	**H** metres	10.4	10	9.6	9	8.6	8	7.5	7	6.3	5.5	4.8	4	3	2			
TOP 4	0.75	1		13	12.5	12	11.6	11	10.6	10	9.5	8.8	8.2	7.4	6.7	6	5	3	2	
TOP 5	0.92	1.25		15.5	15	14.5	14	13.6	13	12.6	12	11.4	10.8	10	9.4	8.7	7.8	6	5	2.5

Q = Flow rate **H** = Total manometric head

Performance curves comply with EN ISO 9906 Grade 3B tolerance limits.

ABSORPTION

TYPE **Single-phase**	VOLTAGE **230 V**
TOP 1	1.5 A
TOP 2	2.0 A
TOP 3	3.2 A
TOP 4	4.5 A
TOP 5	5.5 A

※ **TOP-LA** and **TOP-GM** pumps have the same performance

DIMENSIONS AND WEIGHT

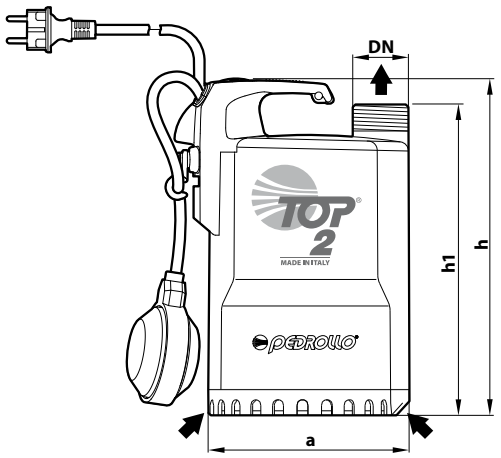

Typical installation

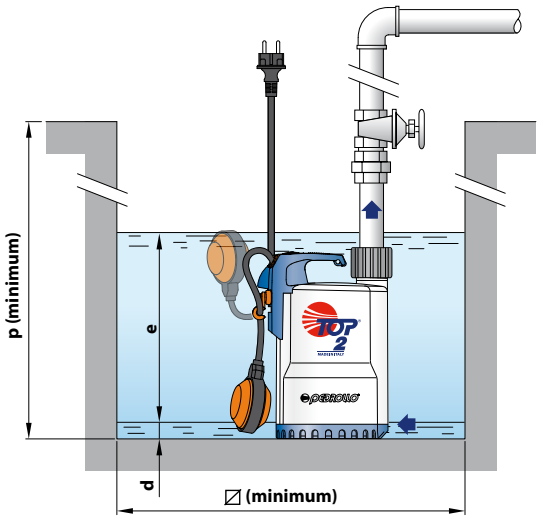

TYPE Single-phase	PORT DN	DIMENSIONS mm a	h	h1	d	e	p	⌀	kg
TOP 1	**1¼"**	152	260	240	14	adjustable	350	350	5.4
TOP 2									5.4
TOP 3			290	270					6.7
TOP 4	**1½"**	204	337	313	30		450	450	10.3
TOP 5									11.3

※ **TOP-LA** pumps have the same dimensions

※ Version with 'GM' magnetic float switch

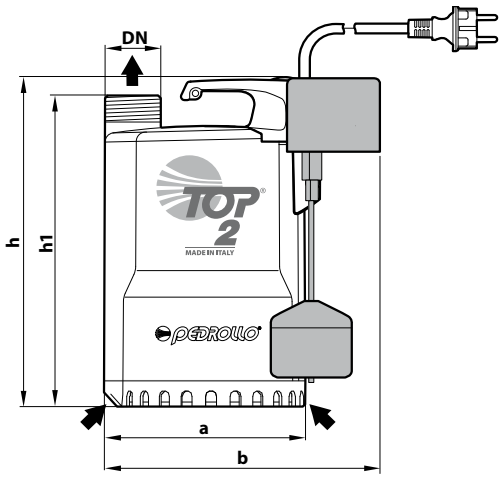

Typical installation

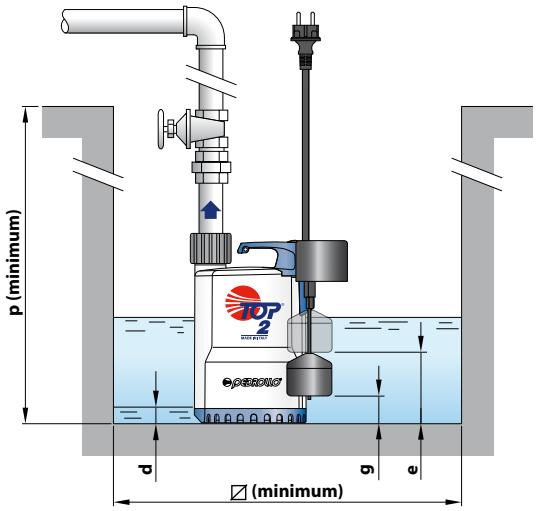

TYPE Single-phase	PORT DN	DIMENSIONS mm a	b	h	h1	d	e	g (adjustable)	p	⌀	kg
TOP 1 - GM	**1¼"**	152	200	260	240	14	140	35	350	220	5.4
TOP 2 - GM											5.4
TOP 3 - GM				290	270		170	40			6.9
TOP 4 - GM	**1½"**	204	-	337	313	30	220	65	450	300	10.5
TOP 5 - GM											11.4

PALLET CAPACITY

TYPE Single-phase	NO. OF PUMPS
TOP 1	80
TOP 2	80
TOP 3	80
TOP 4	45
TOP 5	45

TYPE Single-phase	NO. OF PUMPS
TOP 1- GM	80
TOP 2 - GM	80
TOP 3 - GM	80
TOP 4 - GM	45
TOP 5 - GM	45

TOP 1-2-3

MATERIALS AND COMPONENTS

1	**Pump body**	Technopolymer
2	**Suction filter**	Technopolymer
3	**Suction cover**	Stainless steel **AISI 304** (for TOP-LA versions **AISI 316L**)
4	**Diffuser**	Technopolymer
5	**Impeller**	Noryl™
6	**Motor sleeve**	Stainless steel **AISI 304** (for TOP-LA versions **AISI 316L**)
7	**Motor cover**	**AISI 304** stainless steel
8	**Motor shaft**	Stainless steel **AISI 431** (for TOP-LA versions **AISI 316L**)

9 Mechanical seal

Water pump	Seal	Shaft	Materials
TOP 1-2-3	**STA-12R**	Ø 12 mm	Ceramic / Graphite / NBR
TOP 2-3 LA	**AR-12R LA**	Ø 12 mm	Ceramic / Graphite / NBR

10 Sealing ring Ø 12 x Ø 19 x H 5 mm

11 Capacitor

12 Electric motor
TOP: single-phase 230 V - 50 Hz with winding integrated thermal motor protection
- Continuous duty S1 - Insulation: class F
- Protection rating IP X8

13 Handle group
Complete with
– 5 m power cable type 'H07 RN-F' with Schuko plug
– Float switch (vertical operation in GM versions)

14 Ferrule and hose nozzle

Hose connector Ø 25 mm for TOP 1
Ø 35 mm for TOP 2-3

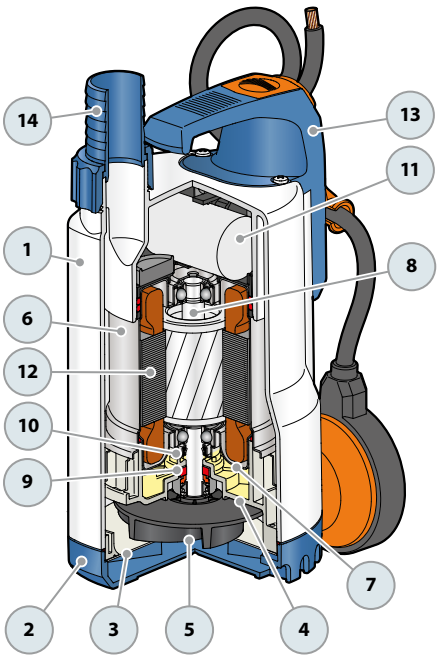

TOP 4-5

MATERIALS AND COMPONENTS

1	**Pump body**	Technopolymer
2	**Suction filter**	Technopolymer
3	**Suction cover**	Stainless steel **AISI 304**
4	**Diffuser**	Technopolymer
5	**Impeller**	Noryl™
6	**Motor sleeve**	Stainless steel **AISI 304**
7	**Motor cover**	Stainless steel **AISI 304**
8	**Motor shaft**	Stainless steel **AISI 431**

9 Double mechanical seal with interposed oil chamber

Seal	Shaft	Location	Materials
MG1-14D SIC	Ø 14 mm	Motor side	SiC / Graphite / NBR
		Pump side	SiC / SiC / NBR

10 Capacitor

11 Electric motor
TOP: single-phase 230 V - 50 Hz with winding integrated thermal motor protection
- Continuous duty S1 - Insulation: class F
- Protection rating IP X8

12 Handle group
Including:
– 5 m power cable type 'H07 RN-F' with Schuko plug
– Float switch (vertical operation in GM versions)

13 Sleeve
Threaded technopolymer 1½" with clapet valve

14 Ferrule and hose nozzle
Hose connector Ø 41 mm

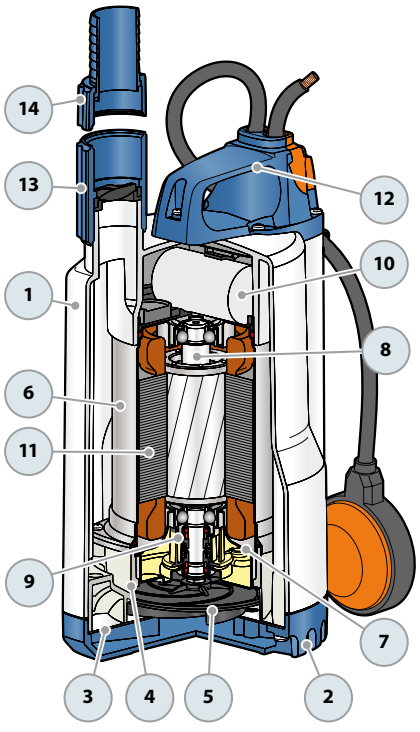

TOP-FLOOR

Submersible pumps for DRAINAGE

Clear waters

Domestic use

※ **TOP-FLOOR**

Designed to remove water from flooded rooms up to 2 mm from the floor

PERFORMANCE RANGE

- Flow rate up to **170 l/min** (10.2 m³/h)
- Head up to **10.4 m**

INSTALLATION AND USE

Clear water TOP-FLOOR series drainage pumps are capable of removing water up to **2 millimeters** from the floor, these pumps are ideal for emergency household use in small, flooded areas and any situation where maximum drainage is needed.

APPLICATION LIMITS

- Maximum operating depth below water level up to **3 m** (with an appropriately sized power cable)
- Liquid temperature up to **+40 °C** and up to **+90 °C** for short bursts (up to 3 minutes max) for intermittent service
- Capable of processing suspended solids up to **Ø 2 mm**
- Draining capability up to **2 mm** from the bottom

INCLUDES

※ **5 m** long power cable

AVAILABLE UPON REQUEST

※ Pumps with float switch
※ Mechanical seal options available
※ Pumps with **10 m** power cable.
※ Different voltage requirements 60 Hz frequency

PATENTS - TRADE MARKS - MODELS

- Registered Community Model No. 342159-0011

CURVES AND PERFORMANCE DATA

50 Hz

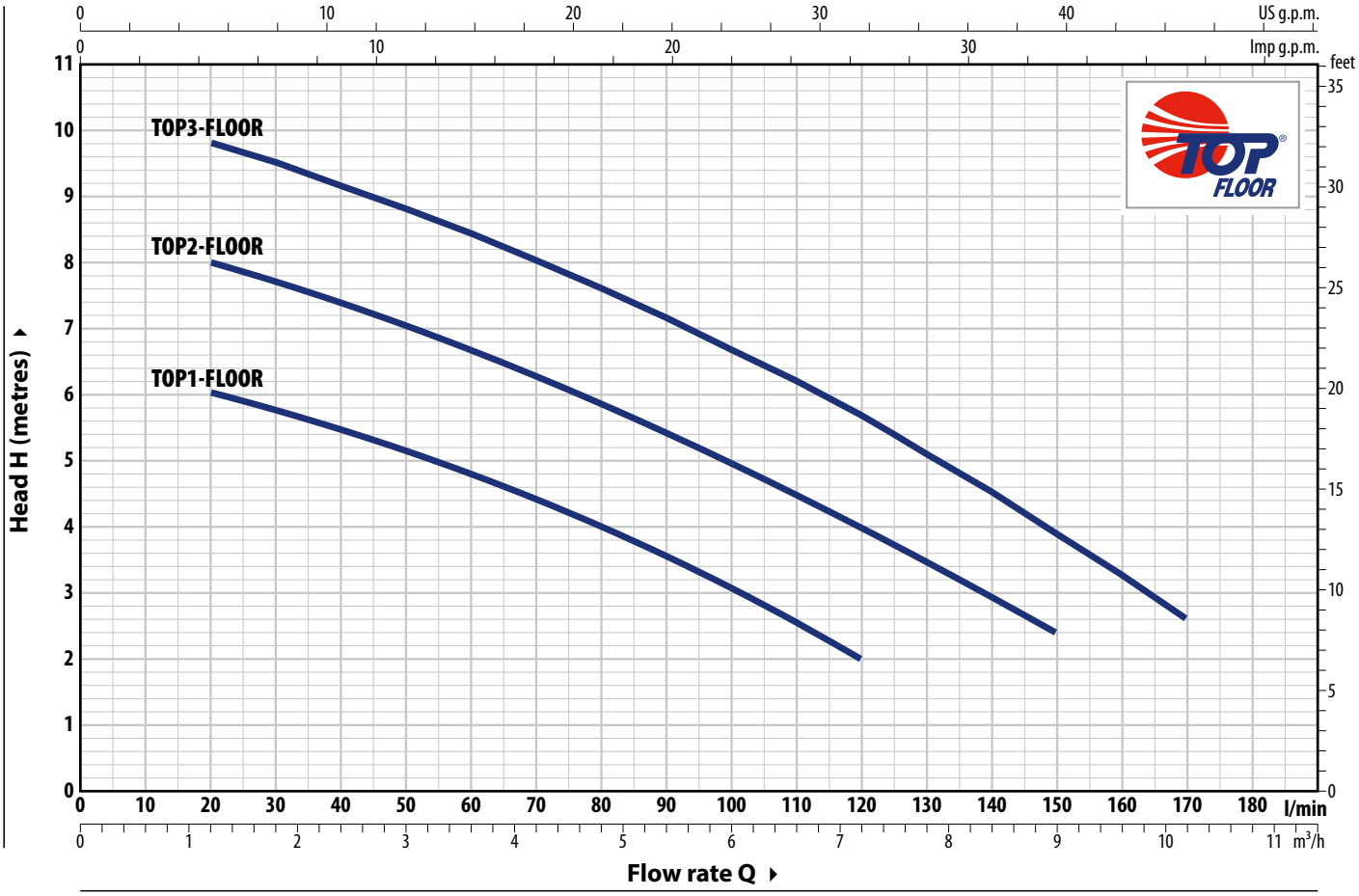

TYPE	POWER (P2)		Q m³/h	0	1.2	2.4	3.6	4.8	6.0	7.2	7.8	9.0	10.2
Single-phase	**kW**	**HP**	Q l/min	**0**	**20**	**40**	**60**	**80**	**100**	**120**	**130**	**150**	**170**
TOP 1-FLOOR	0.25	0.33		6.5	6	5.5	4.8	4	3	2			
TOP 2-FLOOR	0.37	0.50	**H** metres	8.5	8	7.4	6.7	6	5	4	3.5	2.4	
TOP 3-FLOOR	0.55	0.75		10.4	9.8	9.2	8.4	7.6	6.7	5.7	5	4	2.6

Q = Flow rate **H** = Total manometric head

Performance curves comply with EN ISO 9906 Grade 3B tolerance limits.

ABSORPTION

TYPE **Single-phase**	VOLTAGE **230 V**
TOP 1-FLOOR	1.5 A
TOP 2-FLOOR	2.0 A
TOP 3-FLOOR	3.1 A

DIMENSIONS AND WEIGHT

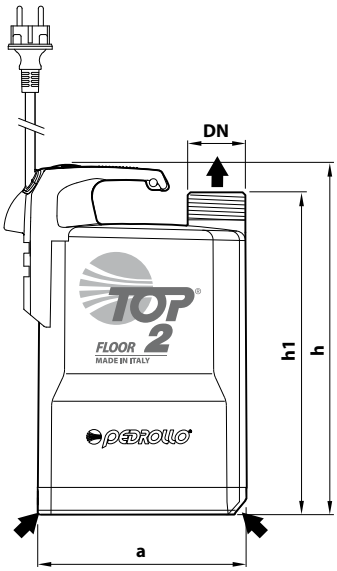

Typical installation

TYPE **Single-phase**	PORT **DN**	DIMENSIONS mm a	h	h1	Minimum drainage level	kg
TOP 1-FLOOR	**1¼"**	152	257	237	**2 mm**	5.2
TOP 2 -FLOOR						5.2
TOP 3 -FLOOR			287	268		6.6

PALLET CAPACITY

TYPE **Single-phase**	NO. OF PUMPS
TOP 1-FLOOR	96
TOP 2-FLOOR	96
TOP 3-FLOOR	96

MATERIALS AND COMPONENTS

1	**Pump body**	Technopolymer
2	**Suction filter**	Technopolymer
3	**Suction cover**	Stainless steel **AISI 304**
4	**Diffuser**	Technopolymer
5	**Impeller**	Noryl™
6	**Motor sleeve**	Stainless steel **AISI 304**
7	**Motor cover**	Stainless steel **AISI 304**
8	**Motor shaft**	Stainless steel **AISI 431**

9 Double shaft seal with interposed oil chamber

Seal	Shaft	Materials
STA-12R	Ø 12 mm	Ceramic / Graphite / NBR

Sealing ring Ø 12 x Ø 19 x H 5 mm

10 Capacitor

11 Electric motor

TOP-FLOOR: single-phase 230 V - 50 Hz with winding integrated thermal motor protection

- Continuous running duty S1
- Insulation: Class F
- Protection rating IP X8

12 Handle group

※ Complete with 5 metres long power cable type 'H07 RN-F' with Schuko plug

13 Ferrule and hose nozzle

Hose connector Ø 25 mm for TOP1-FLOOR
Ø 35 mm for TOP2-FLOOR, TOP3-FLOOR

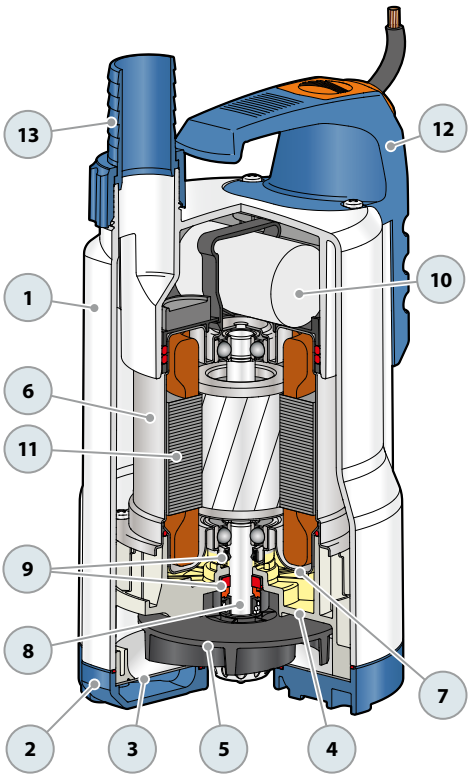

TOP-VORTEX

Submersible pumps for DRAINAGE

Dirty water

Domestic use

※ **TOP-VORTEX**

Drainage pumps: reliable and durable

PERFORMANCE RANGE

- Flow rate up to **170 l/min** (10.2 m³/h)
- Head up to **8.7 m**

INSTALLATION AND USE

TOP-VORTEX pumps are suitable for draining clear water without abrasive particles that will not damage the pump's components. Construction features ensure user-friendly and safe operation, including motor cooling and a double shaft seal.

These pumps are particularly well-suited for domestic applications, including draining dirty water, emptying tanks, managing domestic drains, and clearing sumps, even in the presence of suspended solids of up to 25 mm in diameter.

APPLICATION LIMITS

- Maximum operating depth below water level up to **3 m** (with an appropriately sized power cable)
- Liquid temperature up to **+40 °C** and up to **+90 °C** for short bursts (up to 3 minutes max) for intermittent service
- Capable of processing suspended solids up to **Ø 25 mm**
- Draining capability up to **25 mm** from the bottom

INCLUDES

※ **5 m** power cable
※ Float switch

PATENTS - TRADE MARKS - MODELS

- Patent No. IT0001428923
- Registered Community Model No. 342159-0011

AVAILABLE UPON REQUEST

※ Mechanical seal options available
※ Pumps with **10 m** power cable
※ Different voltage requirements 60 Hz frequency

※ **TOP-VORTEX/GM** " pumps with magnetic float operation (suitable for small sumps)

※ **TOP-VORTEX/GM**

CURVES AND PERFORMANCE DATA

50 Hz

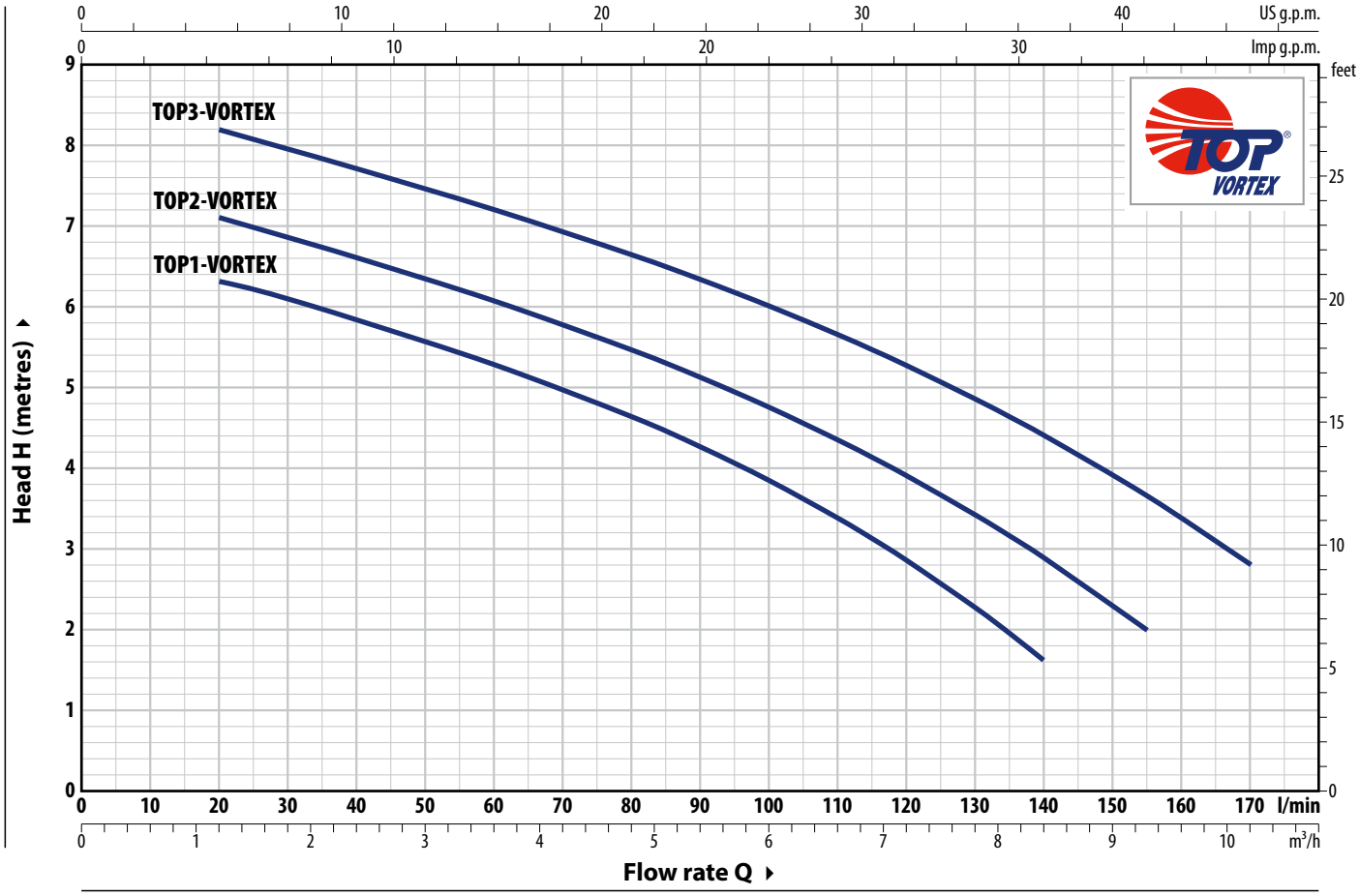

TYPE Single-phase	POWER (P2) kW	POWER (P2) HP	Q m³/h	0	1.2	2.4	3.6	4.8	6.0	7.2	8.4	9.3	10.2
			Q l/min	**0**	**20**	**40**	**60**	**80**	**100**	**120**	**140**	**155**	**170**
TOP 1 - VORTEX	0.25	0.33		7	6.3	5.8	5.3	4.6	3.8	2.8	1.6		
TOP 2 - VORTEX	0.37	0.50	**H** metres	7.6	7	6.6	6	5.5	4.8	4	3	2	
TOP 3 - VORTEX	0.55	0.75		8.7	8.2	7.7	7.2	6.7	6	5.3	4.4	3.7	2.8

Q = Flow rate **H** = Total manometric head

Performance curves comply with EN ISO 9906 Grade 3B tolerance limits.

ABSORPTION

TYPE Single-phase	VOLTAGE **230 V**
TOP 1 - VORTEX	1.5 A
TOP 2 - VORTEX	2.0 A
TOP 3 - VORTEX	2.9 A

DIMENSIONS AND WEIGHT

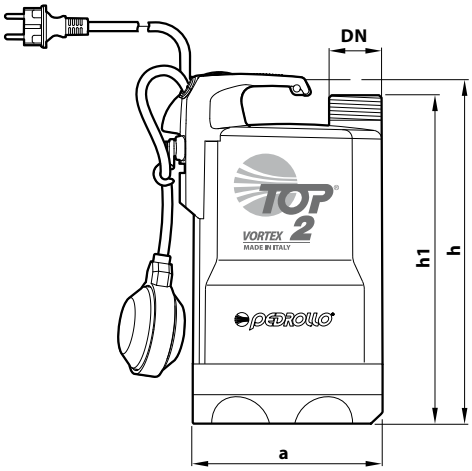

Typical installation

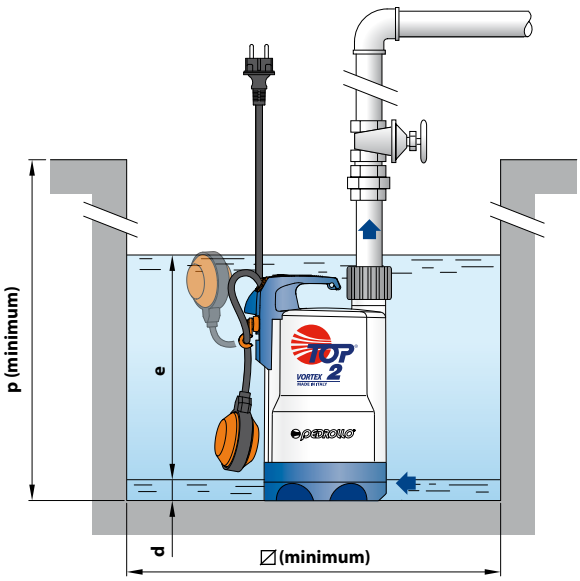

TYPE	PORT	DIMENSIONS mm							kg
Single-phase	**DN**	a	h	h1	d	e	p	⧄	
TOP 1 - VORTEX	**1¼"**	152	288	268	25	adjustable	350	350	5.4
TOP 2 - VORTEX									5.4
TOP 3 - VORTEX			318	298					6.8

※ Version with 'GM' magnetic float switch

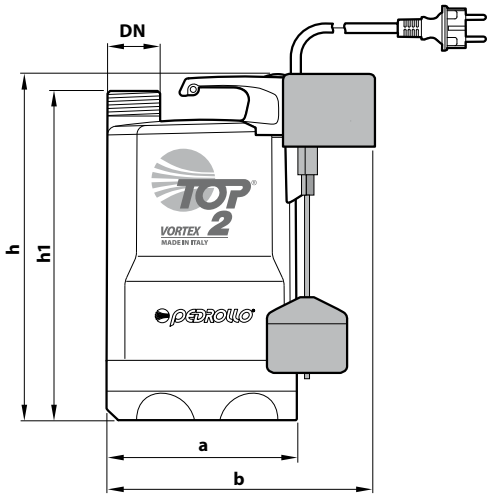

Typical installation

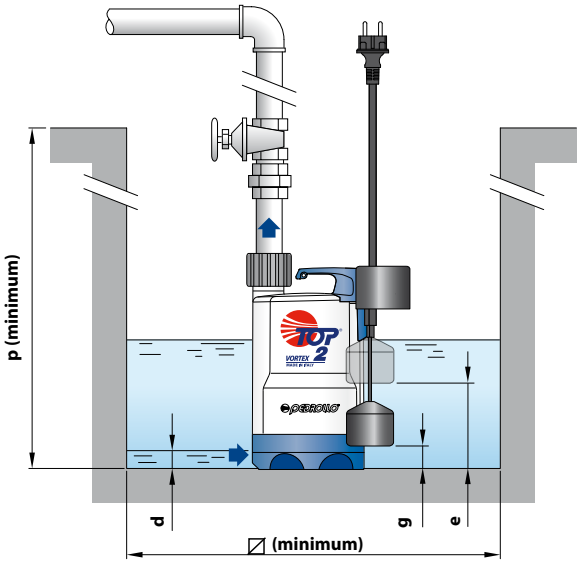

TYPE	PORT	DIMENSIONS mm									kg
Single-phase	**DN**	a	b	h	h1	d	e	g (adjustable)	p	⧄	
TOP 1 - VORTEX/GM	**1¼"**	152	200	288	268	25	170	40	350	220	5.5
TOP 2 - VORTEX/GM											5.5
TOP 3 - VORTEX/GM				318	298		200	65			6.9

PALLET CAPACITY

TYPE **Single-phase**	NO. OF PUMPS
TOP 1 - VORTEX	96
TOP 2 - VORTEX	96
TOP 3 - VORTEX	96

MATERIALS AND COMPONENTS

1	**Pump body**	Technopolymer
2	**Suction filter**	Technopolymer
3	**Suction cover**	Technopolymer
4	**Diffuser**	Technopolymer
5	**Impeller**	VORTEX technopolymer type
6	**Motor sleeve**	Stainless steel **AISI 304**
7	**Motor cover**	Stainless steel **AISI 304**
8	**Motor shaft**	Stainless steel **AISI 431**

9 Double shaft seal with interposed oil chamber

Seal	Shaft	Materials
STA-12R	Ø 12 mm	Ceramic / Graphite / NBR

Shaft seal Ø 12 x Ø 19 x H 5 mm

10 Capacitor

11 Electric motor

TOP-VORTEX: single-phase 230 V - 50 Hz with winding integrated thermal motor protection

- Continuous running duty S1
- Insulation: Class F
- Protection rating IP X8

12 Handle group

Including:
– Float switch
(vertically operating float switch in GM versions)
– 5 metres power cable type 'H07 RN-F' with Schuko plug

13 Ferrule and hose nozzle

Hose connector Ø 35 mm

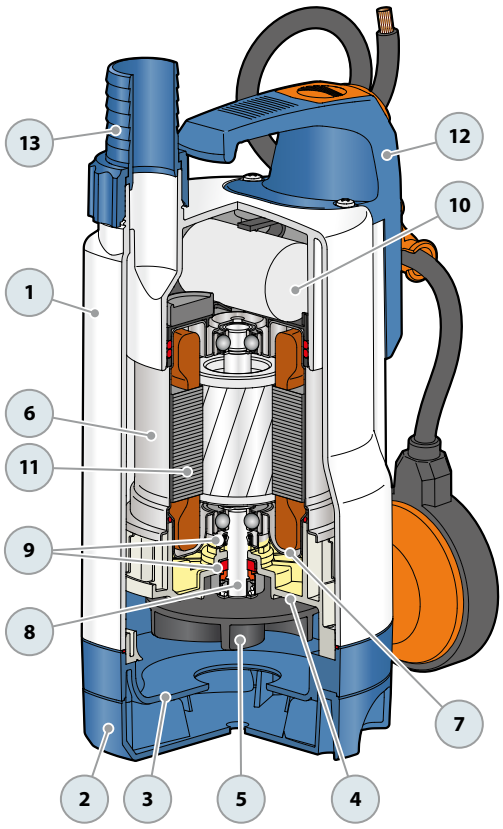

Dirty water

Domestic use

※ **TEX: reliable water elimination with magnetic level switch**

※ **Innovative, patented design**

※ **Premium quality**

※ **Ideal for sumps with limited space**

※ **Robust and compact**

※ **Equipped with retractable handle**

※ **Exceptional performance**

PERFORMANCE RANGE

- Flow rate up to **240 l/min** (14.4 m³/h)
- Head up to **10 m**

INSTALLATION AND USE

TEX electric sewage pumps offer a dependable solution for wastewater management. Primarily utilized in stationary setups to remove water from sumps, they are also suitable for portable applications, such as tanks, reservoirs, ditches, or during floods.

TEX pumps offer increased power and a larger clearance area, while the oversized motor prevents overheating even when operating without cover.

※ Key features include a spacious side drain for rapid water evacuation with minimal energy consumption.

※ Additionally, **TEX** pumps come equipped with a compact, integrated magnetic float switch that ensures complete electrical safety and enables usage in confined spaces, including sumps as small as **220 mm** on each side.

APPLICATION LIMITS

- Maximum operating depth below water level up to **5 m** (with an appropriately sized power cable)
- Liquid temperature up to **+40 °C** and up to **+90 °C** for short bursts (up to 3 minutes max) for intermittent service
- Capable of processing suspended solids up to **Ø 30 mm**
- Draining capability up to **35 mm** from the bottom

INCLUDES

※ **5 m** power cable

※ An adjustable vertical magnetic float level switch

※ Hose connector **Ø 40 mm**

AVAILABLE UPON REQUEST

※ Mechanical seal options available

※ Pumps with **10 m** power cable.

※ Different voltage requirements 60 Hz frequency

PATENTS - TRADE MARKS - MODELS

- Registered Community Model No. 005205556
- **TEX®**European registered trademark No. 017884160

CURVES AND PERFORMANCE DATA

50 Hz

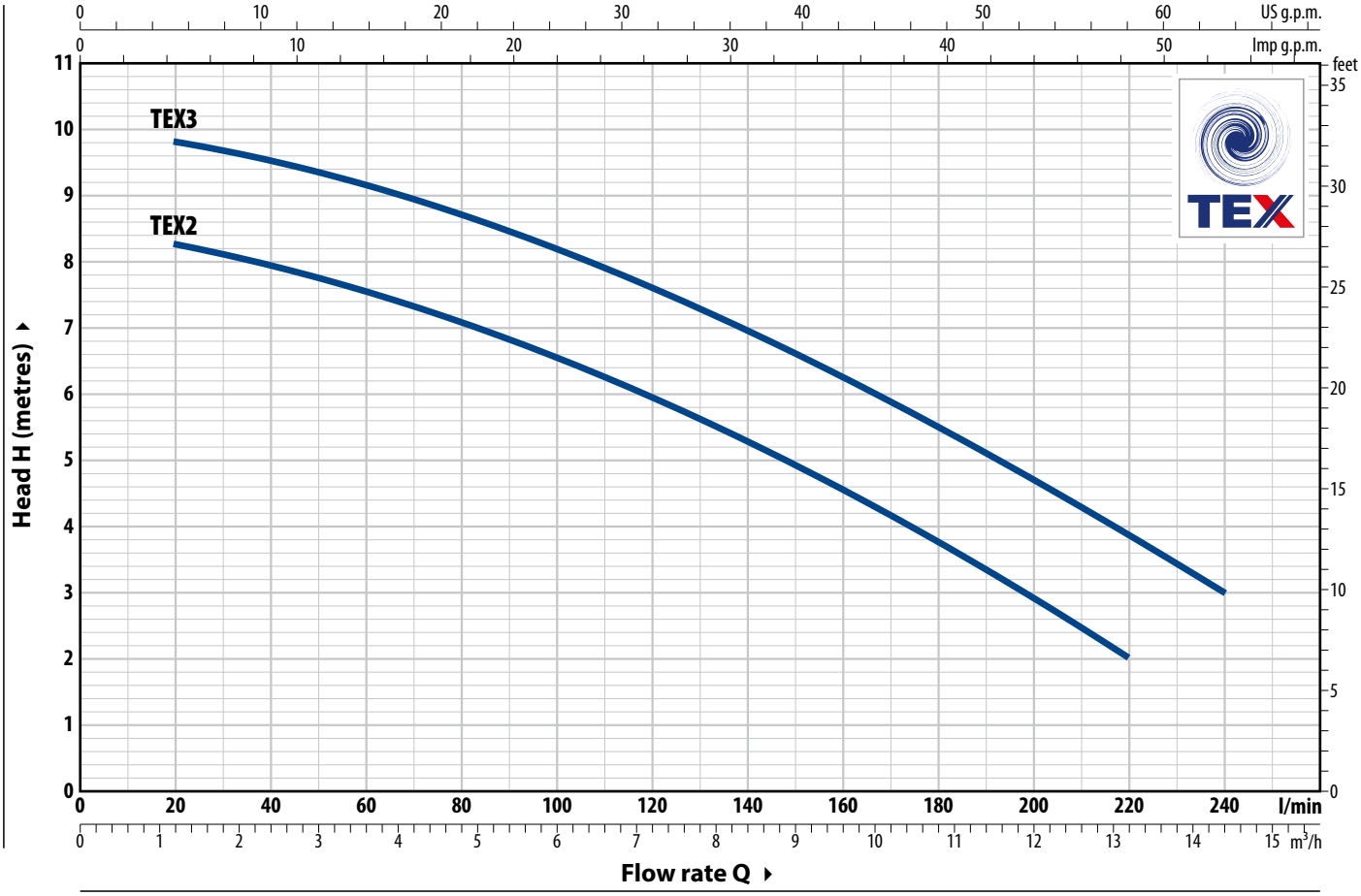

TYPE	POWER (P2)		Q m³/h	0	1.2	2.4	3.6	4.8	6	7.2	8.4	9.6	10.8	12	13.2	14.4
Single-phase	**kW**	**HP**	l/min	**0**	**20**	**40**	**60**	**80**	**100**	**120**	**140**	**160**	**180**	**200**	**220**	**240**
TEX 2	0.37	0.50	**H** metres	8.5	8.3	8	7.6	7	6.6	6	5.3	4.6	3.8	3	2	
TEX 3	0.55	0.75		10	9.8	9.5	9.2	8.7	8.2	7.6	7	6.3	5.5	4.7	4	3

Q = Flow rate **H** = Total manometric head

Performance curves comply with EN ISO 9906 Grade 3B tolerance limits.

RETRACTABLE HANDLE

ABSORPTION

TYPE	VOLTAGE
Single-ph.	**230 V**
TEX 2	2.3 A
TEX 3	3.3 A

SWITCH FOR AUTOMATIC MODE

SWITCH FOR MANUAL MODE

DIMENSIONS AND WEIGHT

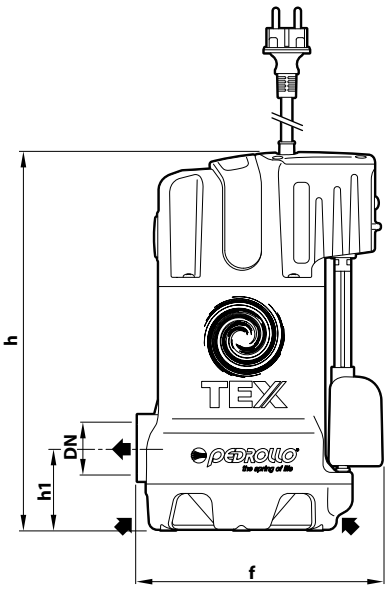

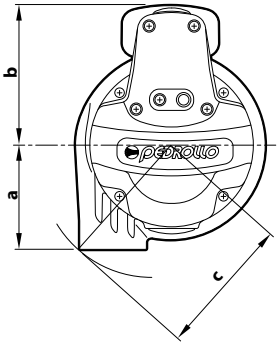

Typical installation

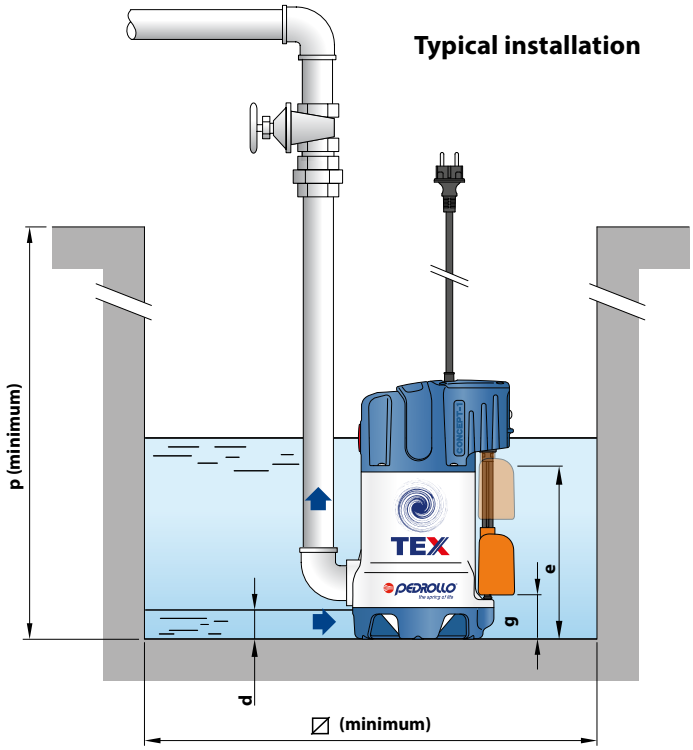

Rubber holder fitting

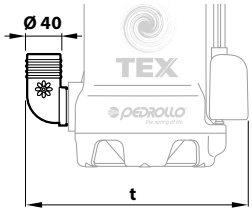

TYPE **Single-phase**	PORT **DN**	Passage of solid bodies	DIMENSIONS mm a	b	c	f	h1	h	d	e	g (adjustable)	t	p	⧄	kg 1~
TEX 2	**1¼"**	**Ø 30 mm**	88	117	118	205	69.5	318	35	100	80 or 100	251	350	220	6.1
TEX 3															7.0

PALLET CAPACITY

TYPE **Single-phase**	NO. OF PUMPS
TEX 2	60
TEX 3	60

MATERIALS AND COMPONENTS

1	**Handle**	Technopolymer
2	**Pump body**	Particularly impact-resistant technopolymer with ISO 228/1 threaded metal insert port
3	**Suction filter**	Technopolymer
4	**Suction cover**	Technopolymer
5	**Impeller**	VORTEX type made of technopolymer
6	**Motor sleeve**	Stainless steel **AISI 304**
7	**Motor cover**	Stainless steel **AISI 304**
8	**Motor shaft**	Stainless steel **AISI 431**

9 Double shaft seal with interposed oil chamber

Seal	Shaft	Materials
STA-12R	Ø 12 mm	Ceramic / Graphite / NBR

Shaft seal Ø 12 x Ø 19 x H 5 mm

10 Capacitor

11 Electric motor

TEX: single-phase 230 V - 50 Hz
with winding integrated thermal motor protection

- Continuous running duty S1
- Insulation: Class F
- Protection rating IP X8

12 Power cord

Type 'H07 RN-F' with Schuko plug

※ Standard length 5 metres

13 Float level switch
Float magnetic vertical solid adjustable

14 Hose connector

Ø 40 mm

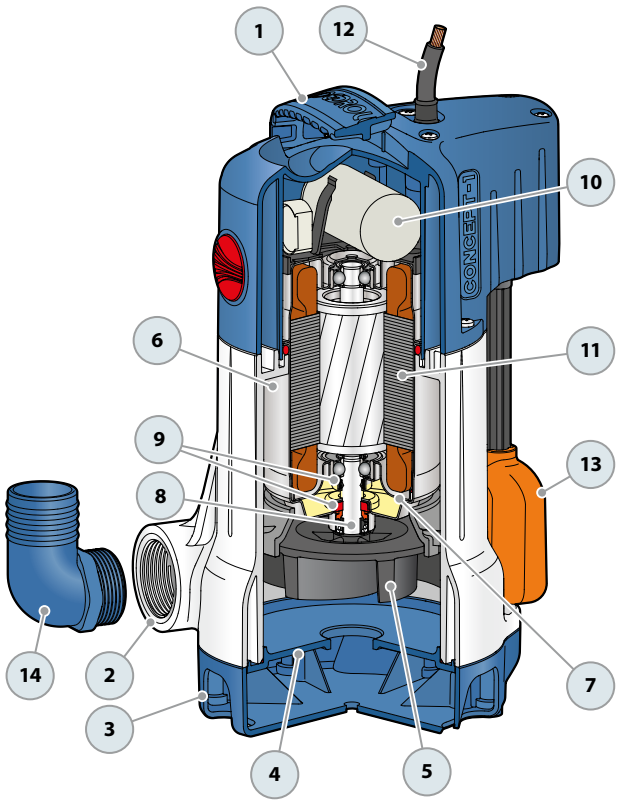

TOP MULTI-AD Submersible pump for AdBlue®

Industrial use

INSTALLATION AND USE

TOP MULTI 1-AD submersible pumps are engineered to handle AUS32 (Aqueous Urea Solution 32.5%), a clean liquid meeting ISO 22241 standards. This solution is also recognized globally under:

※ **AdBlue®** (registered trademark of Verband der Automobilindustrie VDA);
※ **DEF** (Diesel Exhaust Fluid);
※ **Arla 32** (Agente Redutor Liquido de Óxido de Nitrogênio Automotivo).

APPLICATION LIMITS

- Depth of use below liquid level up to **3 m**
- Liquid temperature up to **+40 °C**
- Draining capability up to **25 mm** from the bottom

INCLUDES

※ **5 m** long power cable with H07BN4-F sheathing
※ Complete sleeve with clapet valve

AVAILABLE UPON REQUEST

※ Different voltage requirements 60 Hz frequency
※ 10 metres long power cable

CURVES AND PERFORMANCE DATA 50 Hz

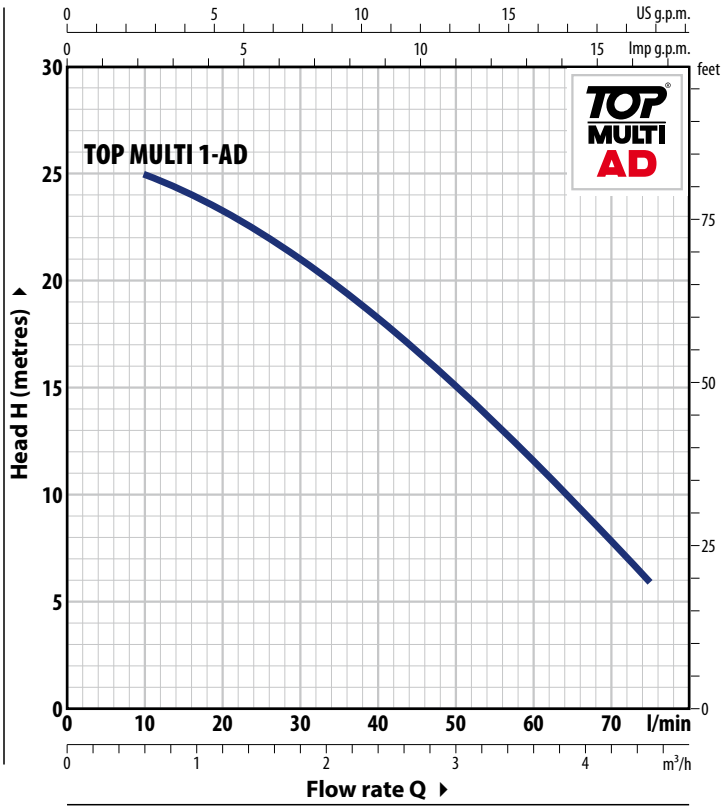

ABSORPTION

TYPE	VOLTAGE
Single-phase	**230 V**
TOP MULTI 1-AD	2.0 A

TYPE	POWER (P2)		Q m³/h	0	0.6	1.2	1.8	2.4	3.0	3.6	4.2	4.5
Single-phase	**kW**	**HP**	l/min	**0**	**10**	**20**	**30**	**40**	**50**	**60**	**70**	**75**
TOP MULTI 1-AD	0.37	0.50	**H** metres	26	25	23.3	21	18.3	15	11.6	8	6

MATERIALS AND COMPONENTS

1	**Pump body**	Technopolymer with ISO 228/1 threaded delivery port
2	**Suction filter**	Technopolymer
3	**Containment stages**	Technopolymer
4	**Impeller**	Noryl™
5	**Diffuser**	Noryl™
6	**Diffuser vanes**	Technopolymer
7	**Motor sleeve**	Stainless steel **AISI 304**
8	**Motor cover**	Stainless steel **AISI 304**
9	**Motor shaft**	Stainless steel **AISI 431**

10 Double shaft seal

Seal	Shaft	Materials
STA-12R SGE	Ø 12 mm	Silicon carbide / Graphite / EPDM
Shaft seal		Ø 12 x Ø 19 x H 5 mm

11 Capacitor

12 Electric motor

TOP MULTI-AD: Single-phase 230 V - 50 Hz with winding integrated thermal motor protection

- Continuous running duty **S1**
- Insulation: Class F
- Protection rating IP X8

13 Handle group

※ Complete with 5 metres long power cable type 'H07BN4-F'.

14 Sleeve

Threaded 1¼" ISO 228/1 with built-in clapet valve (Included in delivery)

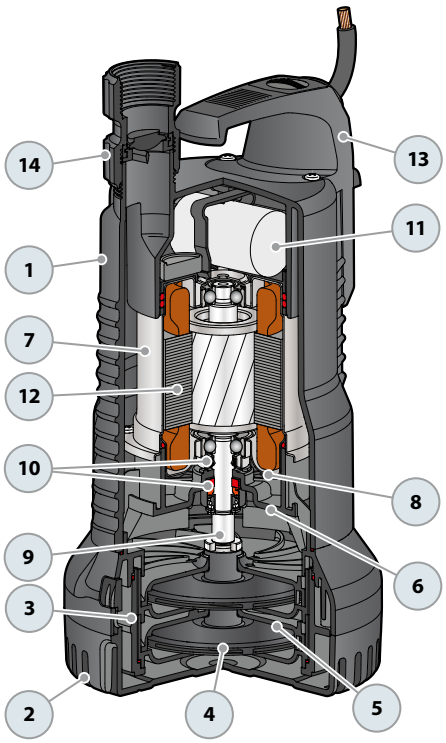

DIMENSIONS AND WEIGHTS (mm)

TYPE **Single-phase**	PORT **DN**	N° STAGES	DIMENSIONS mm a	b	h	h1	d	p	∅	kg
TOP MULTI 1-AD	**1¼"**	2	170	180	295	315	25	350	220	5.9

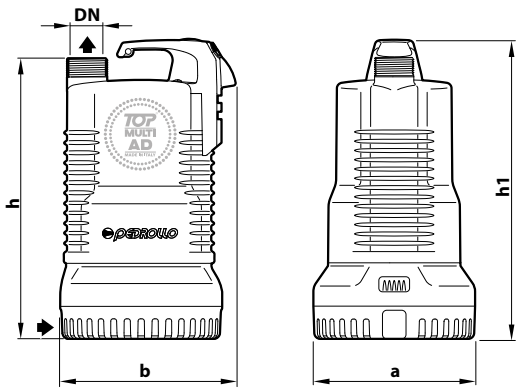

PALLET CAPACITY

TYPE **Single-phase**	NO. OF PUMPS
TOP MULTI 1-AD	60

PLUG & DRAIN Ready-to-use anti-flooding kit

※ **PLUG & DRAIN PLUG & DRAIN is the essential emergency kit for fast and effective flood management in garages, basements, and cellars.**

※ **Features a high-performance drainage pump and a 12.5-metre-long PVC hose for quick water evacuation, plus the option to use the storage case as a filter.**

※ **PLUG & DRAIN efficiently lowers water to just about 2 mm from the ground, ensuring nearly complete removal.**

※ **Comes in a convenient carrying case that simplifies transport and doubles as a filter while you're draining.**

PLUG & DRAIN Code. ASSKPDSTO2FA1

※ STANDARD COMPONENTS

SUBMERSIBLE Pump TOP2-FLOOR

- Single-phase **230 V - 50 Hz**
- Performance:
  - **H max= 8.5 m**
  - **Q max= 150 l/min**
- **10 metres** long power cable with Schuko plug
- Float switch
- **STORZ'** quick coupling
- Draining capability up to **2 mm** from the bottom

PVC HOSE

- **STORZ'** quick coupling
- Hose length **12.5 m**
- Pipe diameter **1¼"**

FILTER-BOX

- Features a secure pump attachment system for stable operation, with a quick-release option to use the pump independently
- Includes a cover for tidy storage, ensuring it's always ready for immediate use

※ PLUG & DRAIN WITH Pumps ON REQUEST

TOP3

Performance:
– H max= **10.4 m**
– Q max= **260 l/min**

CODE ASSKPDSTOP3A1

RXm 2

Performance:
– H max= **10.3 m**
– Q max= **190 l/min**

CODE ASSKPDSRX2A1

RXm 3

Performance:
- H max= **12.3 m**
- Q max= **220 l/min**

CODE ASSKPDSRX3A1

TECHNICAL SPECIFICATIONS		※ SERIES MODEL	※ AVAILABLE MODELS		
		TOP 2-FLOOR	TOP 3	RXm 2	RXm 3
SPECIFICATIONS	Pump type	Submersible	Submersible	Submersible	Submersible
	Pump control	Float	Float	Float	Float
MATERIALS	Pump body	Technopolymer	Technopolymer	**AISI 304** stainless steel	**AISI 304** stainless steel
	Impeller	Noryl™	Noryl™	**AISI 304** stainless steel	**AISI 304** stainless steel
	Mechanical seal	Ceramic/Graphite/NBR	Ceramic/Graphite/NBR	Ceramic/Graphite/NBR	Ceramic/Graphite/NBR
PERFORMANCE	Draining capability from the bottom	**2 mm**	**14 mm**	**14 mm**	**14 mm**
	Maximum depth of immersion	**3 m**	**3 m**	**10 m**	**10 m**
	Maximum size of suspended solids	**2 mm**	**10 mm**	**10 mm**	**10 mm**
FITTINGS	Pump connections Outlet port	**1 ¼" M**	**1 ¼" M**	**1 ¼" F**	**1 ¼" F**
MOTOR ELECTRIC	Typology	Asynchronous (with automatic reset thermal protector)	Asynchronous (with automatic reset thermal protector)	Asynchronous (with automatic reset thermal protector)	Asynchronous (with automatic reset thermal protector)
	Electric power supply	**~ 230 V / 50 Hz**	**~ 230 V / 50 Hz**	**~ 230 V / 50 Hz**	**~ 230 V / 50 Hz**
	Consumption	**450 W**	**700 W**	**450 W**	**800 W**
	CURRENT AT FULL LOAD	**2.0 A**	**3.2 A**	**2.0 A**	**3.6 A**
	Power cord (pre-wired)	**10 m with Schuko plug**	**10 m with Schuko plug**	**10 m with Schuko plug**	**10 m with Schuko plug**
	Service index	Continuous running duty (S1)	Continuous running duty (S1)	Continuous running duty (S1)	Continuous running duty (S1)

DIMENSIONS AND WEIGHT

TYPE	DIMENSIONS mm			kg*
	a	b	h	
PLUG & DRAIN - TOP 2-FLOOR	400	300	320	10.5
PLUG & DRAIN - TOP 3	400	300	362	12.9
PLUG & DRAIN - RXm 2	400	300	362	11.6
PLUG & DRAIN - RXm 3	400	300	362	13.1

(* Total weight: pump, hose, fittings and box)

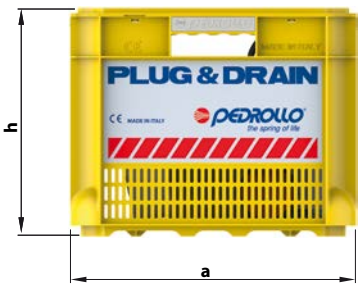

RX Submersible pumps for DRAINAGE

Clear waters
Domestic use
Civil use

※ **Pumps entirely made of stainless steel**

PERFORMANCE RANGE

- Flow rate up to **320 l/min** (19.2 m³/h)
- Head up to **20.5 m**

INSTALLATION AND USE

RX pumps are designed for efficiently draining **clear water** without abrasive particles. Their design ensures user-friendly operation and safe performance, thanks to complete motor cooling and a double shaft seal. Ideal for home and public applications, these pumps are perfect for permanent setups, quickly handling emergency situations like small floods in rooms, basements, and garages. They're also great for managing household wastewater from dishwashers and washing machines, as well as for sump emptying.

APPLICATION LIMITS

- Maximum operating depth below water level up to **10 m** (with an appropriately sized power cable)
- Liquid temperature up to **+50 °C** and up to +90 °C for short bursts (up to 3 minutes max) for intermittent service
- Capable of processing suspended solids up to **Ø 10 mm**
- Draining capability:
  - up to **14 mm** from the bottom for RX 1-2-3
  - up to **25 mm** from the bottom for RX 4-5

PATENTS - TRADE MARKS - MODELS

- Patent No. EP2313658
- Patent No. IT0001428923

INCLUDES

※ **5 m** power cable
※ Float switch for single-phase versions

AVAILABLE UPON REQUEST

※ Mechanical seal options available
※ Pumps with **10 m** power cable
※ Different voltage requirements 60 Hz frequency

※ **RX-GM**" pumps with magnetic float switch (suitable for small sumps)

※ **RX-GM**

CURVES AND PERFORMANCE DATA

50 Hz

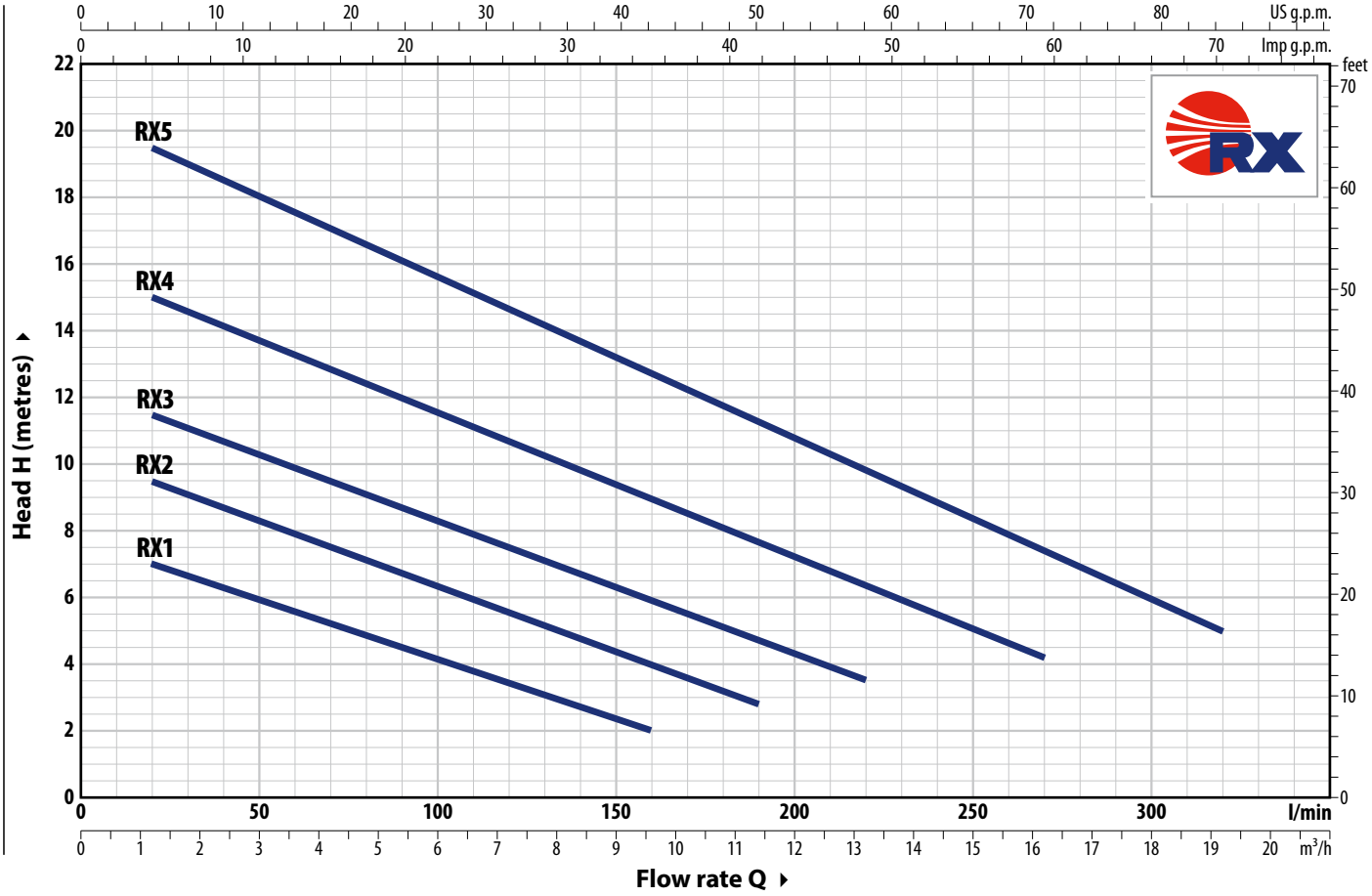

TYPE		POWER (P2)		Q m³/h	0	1.2	3.6	6	7.8	9.6	11.4	13.2	14.4	16.2	18	19.2
Single-ph.	**Three-ph.**	**kW**	**HP**	l/min	**0**	**20**	**60**	**100**	**130**	**160**	**190**	**220**	**240**	**270**	**300**	**320**
RXm 1	**RX 1**	0.25	0.33		7.7	7	5.6	4	3	2						
RXm 2	**RX 2**	0.37	0.50		10.3	9.5	8	6.4	5.2	4	2.8					
RXm 3	**RX 3**	0.55	0.75	**H** metres	12.3	11.5	10	8.3	7	6	4.7	3.5				
RXm 4	**RX 4**	0.75	1		16	15	13.3	11.5	10.3	9	7.7	6.4	5.5	4.2		
RXm 5	**RX 5**	1.1	1.5		20.5	19.5	17.6	15.6	14.2	12.7	11.3	9.8	9	7.4	6	5

Q = Flow rate **H** = Total manometric head

Performance curves comply with EN ISO 9906 Grade 3B tolerance limits.

ABSORPTION

TYPE Single-phase	VOLTAGE **230 V**
RXm 1	1.5 A
RXm 2	2.0 A
RXm 3	3.6 A
RXm 4	5.9 A
RXm 5	7.5 A

TYPE Three-phase	VOLTAGE **400 V**
RX 1	0.9 A
RX 2	**1.0** A
RX 3	1.6 A
RX 4	2.1 A
RX 5	3.5 A

DIMENSIONS AND WEIGHT

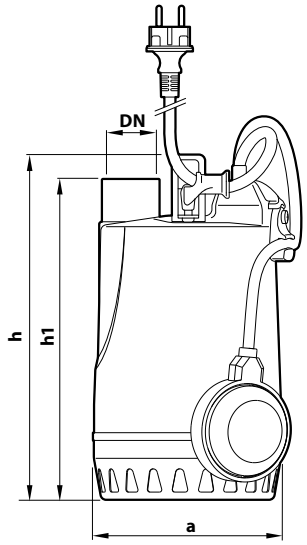

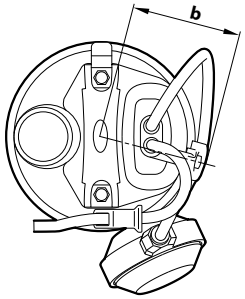

Typical installation

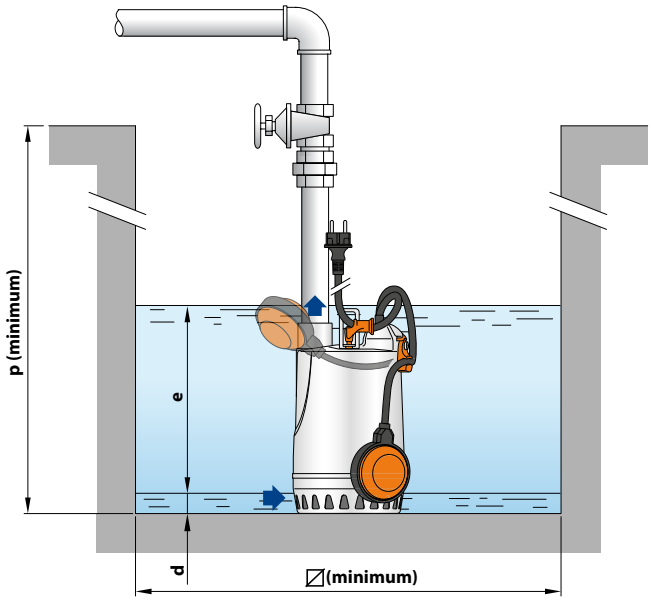

TYPE		PORT	DIMENSIONS mm								kg		PALLET CAPACITY
Single-phase	**Three-phase**	**DN**	a	b	h	h1	d	e	p	⧄	1~	3~	
RXm 1	**RX 1**	**1¼"**	147	84	268	243	14	adjustable	350	350	6.1	5.7	96
RXm 2	**RX 2**										6.1	5.7	96
RXm 3	**RX 3**				298	273					7.6	7.1	96

※ Version with 'GM' magnetic float switch

Typical installation

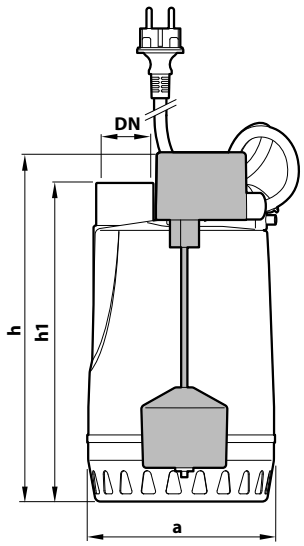

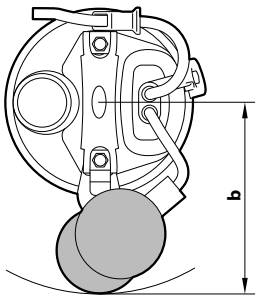

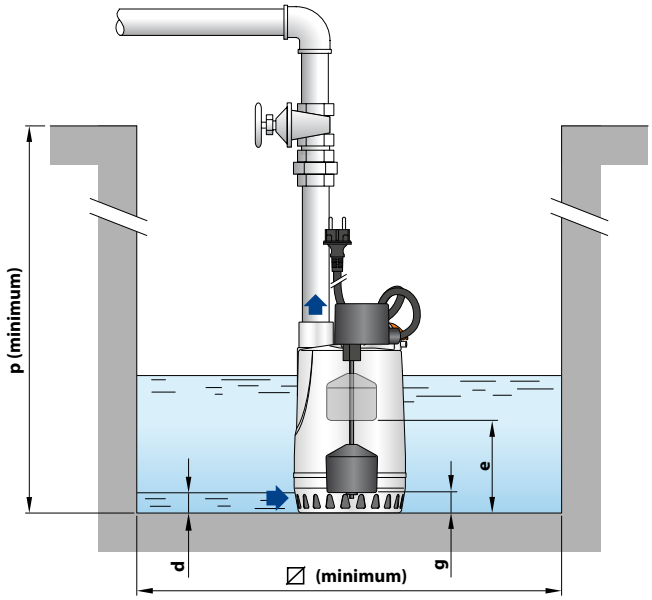

TYPE	PORT	DIMENSIONS mm									kg	PALLET CAPACITY
Single-phase	**DN**	a	b	h	h1	d	e	g (adjustable)	p	⧄	1~	
RXm 1-GM	**1¼"**	147	150	270	243	14	145	40	350	240	6.3	80
RXm 2-GM											6.3	80
RXm 3-GM				300	273		175	45			7.6	80

MATERIALS AND COMPONENTS

1	**Outer sleeve**	**AISI 304** stainless steel with ISO 228/1 threaded port
2	**Suction filter**	Stainless steel **AISI 304**
3	**Diffuser**	Stainless steel **AISI 304**
4	**Impeller**	Stainless steel **AISI 304**
5	**Motor sleeve**	Stainless steel **AISI 304**
6	**Motor cover**	Stainless steel **AISI 304**
7	**Motor shaft**	Stainless steel **AISI 431**

8 Double shaft seal with interposed oil chamber

Seal	Shaft	Materials
STA-12R	Ø 12 mm	Ceramic / Graphite / NBR

Shaft seal Ø 12 x Ø 19 x H 5 mm

9 Capacitor
(exclusive to single-phase models)

10 Electric motor

RXm: single-phase 230 V - 50 Hz with winding integrated thermal motor protection
RX: three-phase 400 V - 50 Hz
- Continuous running duty S1
- Insulation: Class F
- Protection rating IP X8

11 Power cord

Type 'H07 RN-F
(Schuko plug exclusive to single-phase models)

※ Standard length 5 metres

12 Float switch
(exclusive to single-phase models)

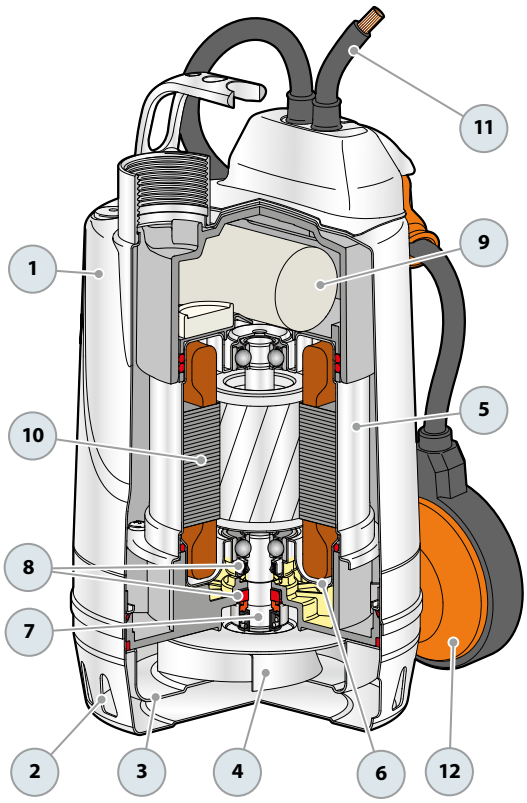

DIMENSIONS AND WEIGHT

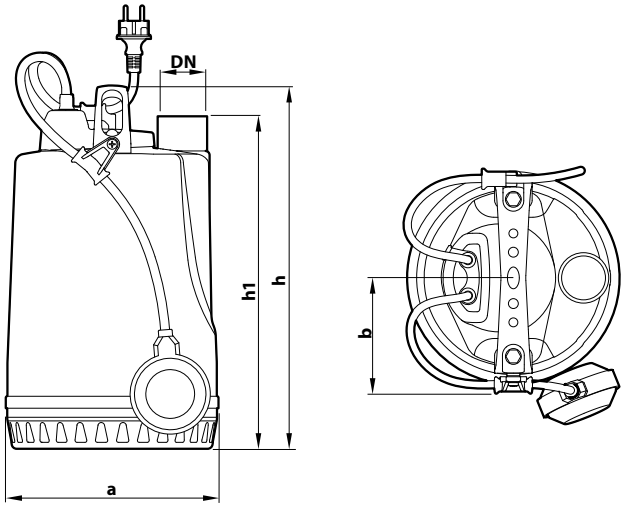

Typical installation

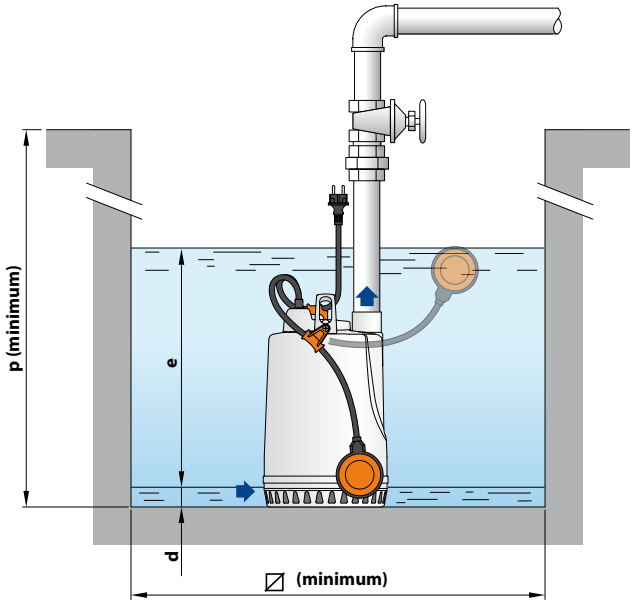

TYPE		PORT	DIMENSIONS mm								kg		PALLET CAPACITY
Single-phase	**Three-phase**	**DN**	a	b	h	h1	d	e	p	⧄	1~	3~	
RXm 4	**RX 4**	**1½"**	220	118.5	368	336	25	adjustable	500	500	14.3	13.3	45
RXm 5	**RX 5**										15.5	14.4	45

※ Version with 'GM' magnetic float switch

Typical installation

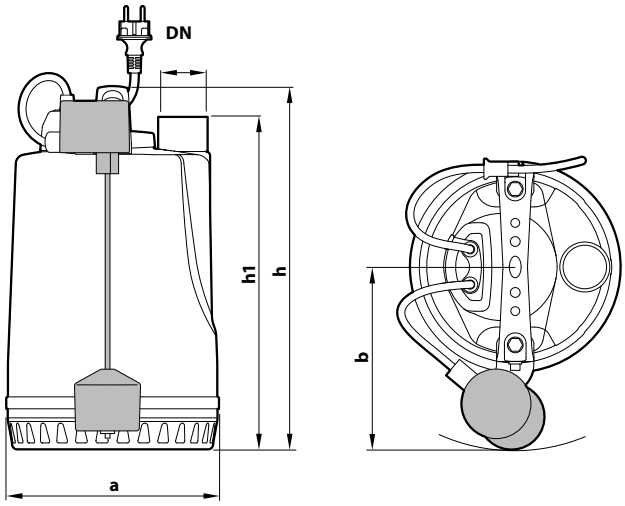

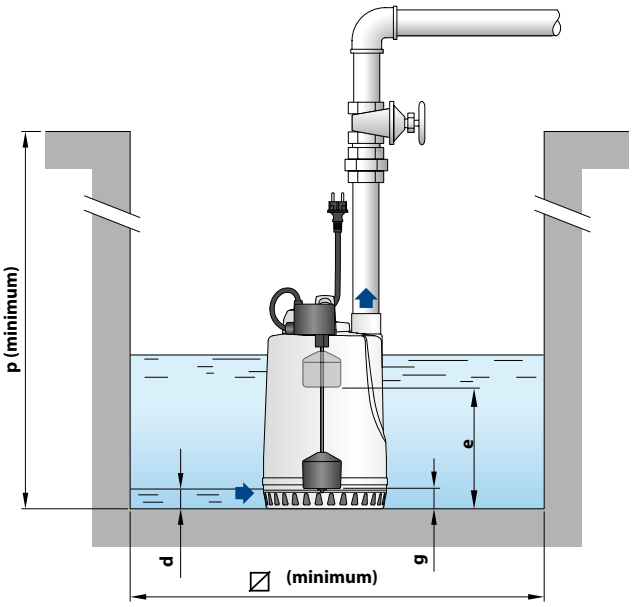

TYPE	PORT	DIMENSIONS mm									kg	PALLET CAPACITY
Single-phase	**DN**	a	b	h	h1	d	e	g (adjustable)	p	⧄	1~	
RXm 4 - GM	**1½"**	220	186.5	368	336	25	250	50	500	300	14.5	36
RXm 5 - GM											15.6	36

MATERIALS AND COMPONENTS

1	**Outer sleeve**	**AISI 304** stainless steel with ISO 228/1 threaded port
2	**Suction filter**	Stainless steel **AISI 304**
3	**Diffuser**	Stainless steel **AISI 304**
4	**Impeller**	Stainless steel **AISI 304**
5	**Motor sleeve**	Stainless steel **AISI 304**
6	**Motor cover**	Stainless steel **AISI 304**
7	**Motor shaft**	Stainless steel **AISI 431**

8 **Double mechanical seal with interposed oil chamber**

Seal	Shaft	Location	Materials
MG1-14D SIC	Ø 14 mm	Motor side	Silicon carbide / Graphite / NBR
		Pump side	Silicon carbide/Silicon carbide/NBR

9 **Capacitor**
(exclusive to single-phase models)

10 **Electric motor**

RXm: single-phase 230 V - 50 Hz with winding integrated thermal motor protection
RX: three-phase 400 V - 50 Hz
- Continuous running duty S1
- Insulation: Class F
- Protection rating IP X8

11 **Power cord**

Type 'H07 RN-F
(Schuko plug exclusive to single-phase models)

※ Standard length 5 metres

12 **Float switch**
(exclusive to single-phase models)

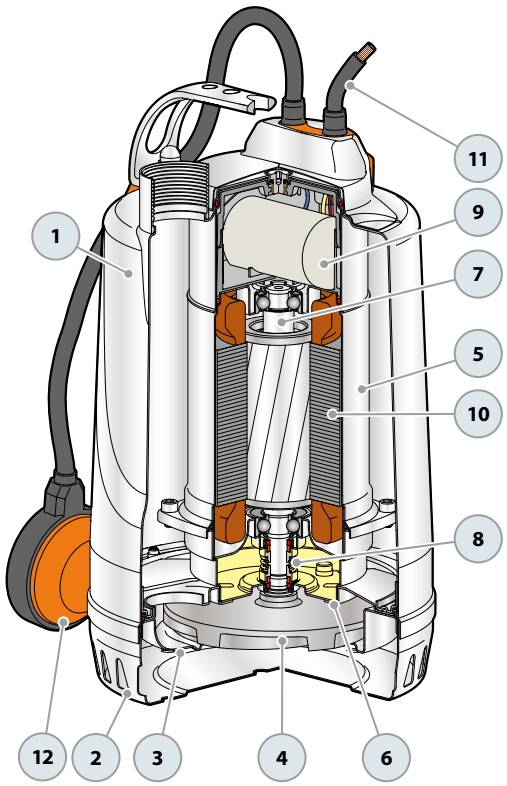

RX-VORTEX Submersible pumps for DRAINAGE

Dirty water
Domestic use
Civil use

※ All stainless steel pumps

PERFORMANCE RANGE

- Flow rate up to **380 l/min** (22.8 m³/h)
- Head up to **12.8 m**

INSTALLATION AND USE

RX-VORTEX pumps excel in draining **dirty water**, featuring designs that ensure reliable performance even during continuous operation, thanks to comprehensive motor cooling. Ideal for **domestic, civil, and industrial applications**, these pumps are perfect for removing dirty water containing suspended solids.

APPLICATION LIMITS

- Maximum operating depth below water level up to **10 m** (with an appropriately sized power cable)
- Liquid temperature up to **+50 °C** and up to **+90 °C** for short bursts (up to 3 minutes max) for intermittent service
- Suspended solids transfer:
  - up to **Ø 20 mm** for RX 2/20, RX 3/20
  - up to **Ø 40 mm** for RX 4/40, RX 5/40
- Draining capability:
  - up to **25 mm** from the bottom for RX 2/20, RX 3/20
  - up to **50 mm** from the bottom for RX 4/40, RX 5/40

PATENTS - TRADE MARKS - MODELS

- Patent No. EP2313658
- Patent No. IT0001428923

INCLUDES

※ Power cable length **5 m**
※ Float switch for single-phase versions

AVAILABLE UPON REQUEST

※ Mechanical seal options available
※ Pumps with **10 m** power cable.
※ Different voltage requirements 60 Hz frequency

※ **RX-VORTEX GM**" pumps with magnetically operated float switch (suitable for small sumps)

RX-VORTEX GM

CURVES AND PERFORMANCE DATA

50 Hz

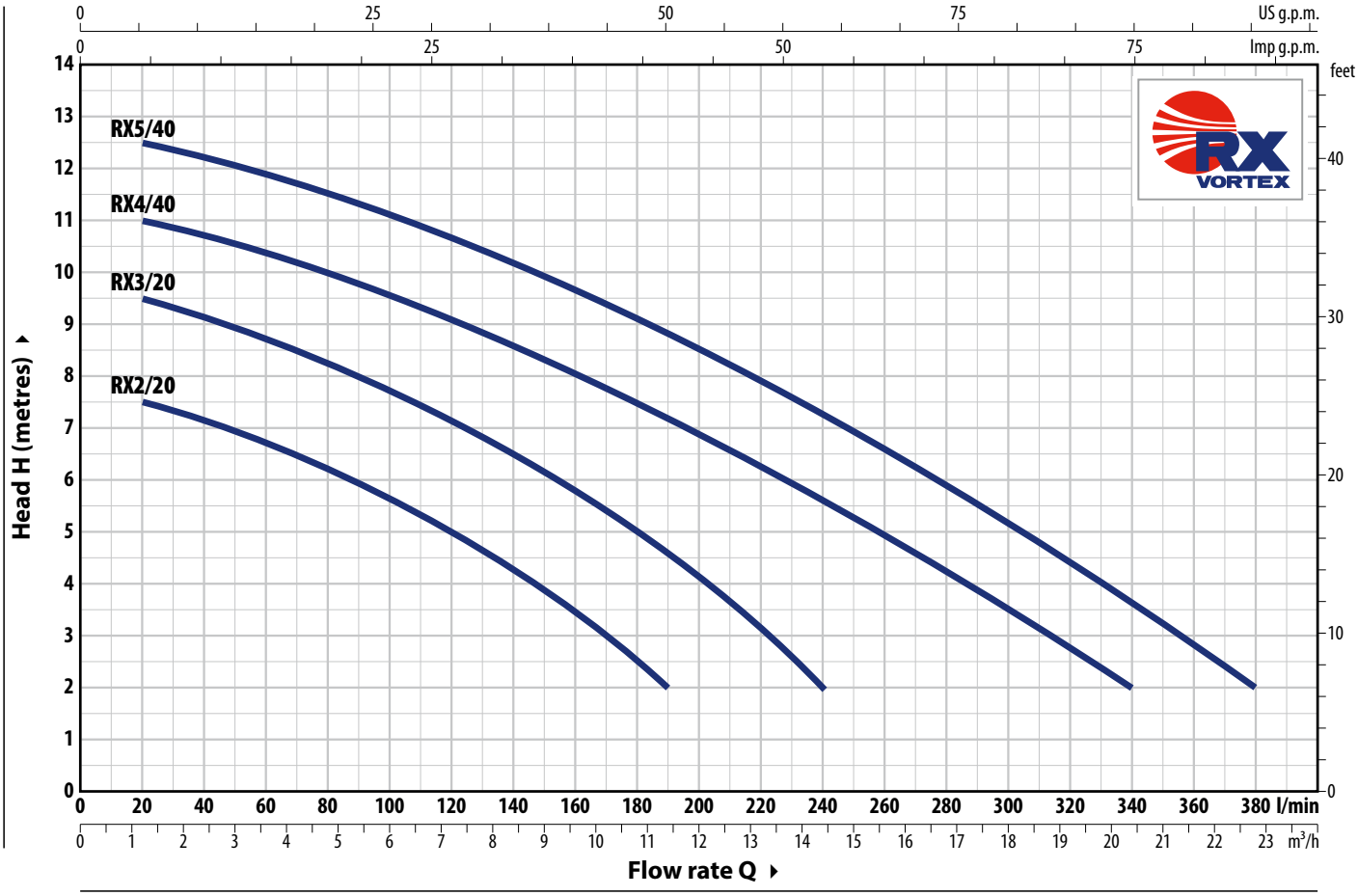

TYPE Single-phase	TYPE Three-phase	POWER (P2) kW	POWER (P2) HP	Q m³/h	0	1.2	3.6	6.0	7.8	9.6	11.4	12.6	14.4	16.2	18.0	20.4	22.8
				Q l/min	**0**	**20**	**60**	**100**	**130**	**160**	**190**	**210**	**240**	**270**	**300**	**340**	**380**
RXm 2/20	**RX 2/20**	0.37	0.50	H metres	8	7.5	6.7	5.6	4.7	3.5	2						
RXm 3/20	**RX 3/20**	0.55	0.75		10	9.5	8.7	7.7	6.8	5.8	4.5	3.6	2				
RXm 4/40	**RX 4/40**	0.75	1		11.3	11	10.3	9.5	8.8	8	7.2	6.6	5.7	4.7	3.6	2	
RXm 5/40	**RX 5/40**	1.1	1.5		12.8	12.5	11.8	11	10.4	9.7	8.8	8.3	7.3	6.3	5.3	3.7	2

Q = Flow rate **H** = Total manometric head

Performance curves comply with EN ISO 9906 Grade 3B tolerance limits.

ABSORPTION

TYPE Single-phase	VOLTAGE **230 V**
RXm 2/20	2.3 A
RXm 3/20	3.4 A
RXm 4/40	5.2 A
RXm 5/40	6.5 A

TYPE Three-phase	VOLTAGE **400 V**
RX 2/20	1.1 A
RX 3/20	1.5 A
RX 4/40	2.1 A
RX 5/40	3.1 A

DIMENSIONS AND WEIGHT

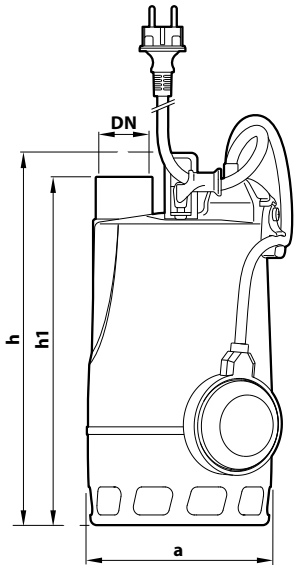

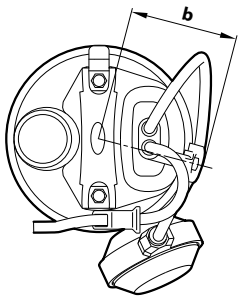

Typical installation

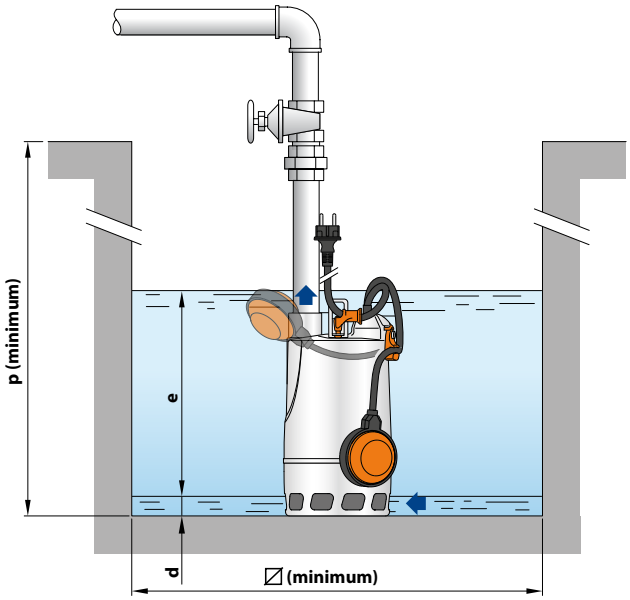

TYPE		PORT	DIMENSIONS mm								kg		PALLET CAPACITY
Single-ph.	**Three-ph**	**DN**	a	b	h	h1	d	e	p	∅	1~	3~	
RXm 2/20	**RX 2/20**	**1¼"**	147	84	300	275	25	adjustable	350	350	6.2	5.8	96
RXm 3/20	**RX 3/20**				330	305					7.7	7.0	96

※ **Version with 'GM' magnetic float switch**

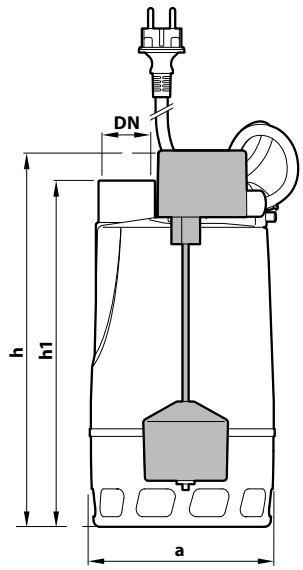

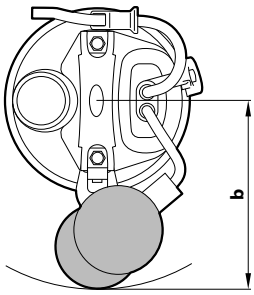

Typical installation

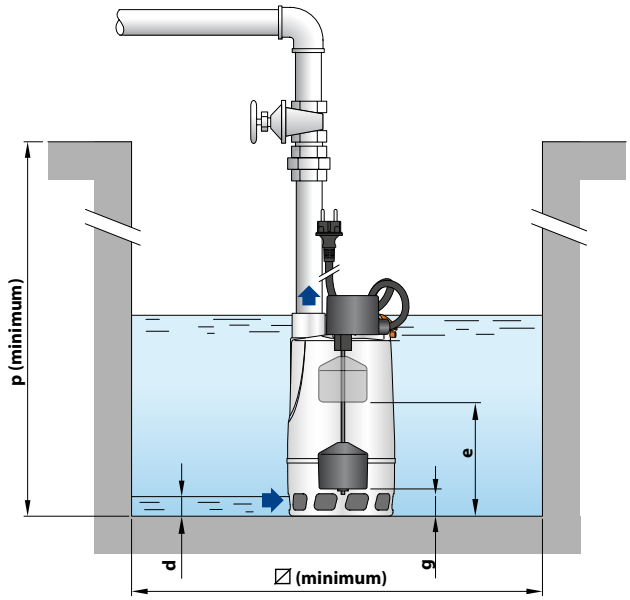

TYPE	PORT	DIMENSIONS mm									kg	PALLET CAPACITY
Single-phase	**DN**	a	b	h	h1	d	e	g (adjustable)	p	∅	1~	
RXm 2/20-GM	**1¼"**	147	150	302	275	25	180	50	350	240	6.3	80
RXm 3/20-GM				332	305		210	80			7.9	80

MATERIALS AND COMPONENTS

1	**Outer sleeve**	**AISI 304** stainless steel with ISO 228/1 threaded port
2	**Suction filter**	Stainless steel **AISI 304**
3	**Diffuser**	Stainless steel **AISI 304**
4	**Impeller**	VORTEX in **AISI 304** stainless steel
5	**Motor sleeve**	Stainless steel **AISI 304**
6	**Motor cover**	Stainless steel **AISI 304**
7	**Motor shaft**	Stainless steel **AISI 431**

8 Double shaft seal with interposed oil chamber

Seal	Shaft	Materials
STA-12R SIC	Ø 12 mm	Ceramic / Silicon carbide / NBR

Shaft seal Ø 12 x Ø 19 x H 5 mm

9 Capacitor
(exclusive to single-phase models)

10 Electric motor

RXm: single-phase 230 V - 50 Hz with winding integrated thermal motor protection
RX: three-phase 400 V - 50 Hz
– Continuous running duty S1
– Insulation: Class F
– Protection rating IP X8

11 Power cord

Type 'H07 RN-F
(Schuko plug exclusive to single-phase models)
※ Standard length 5 metres

12 Float switch
(exclusive to single-phase models)

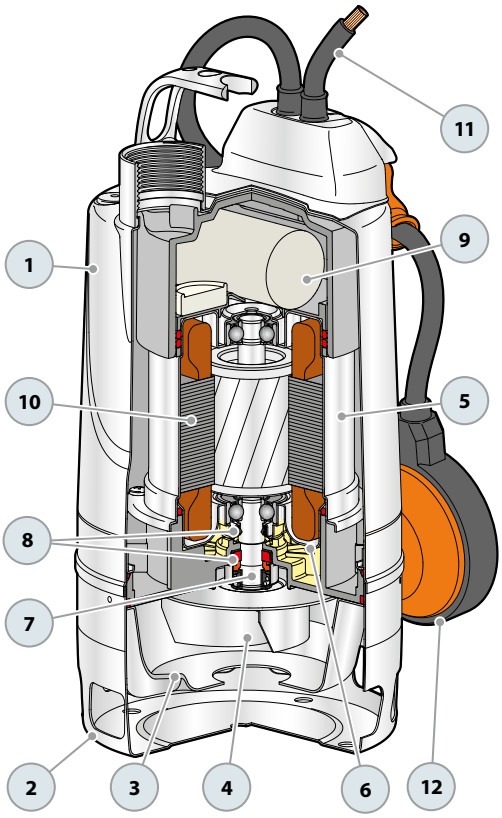

DIMENSIONS AND WEIGHT

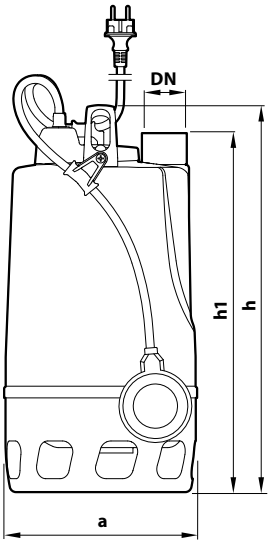

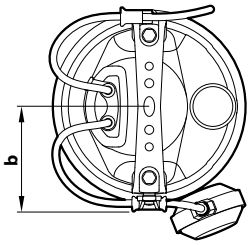

Typical installation

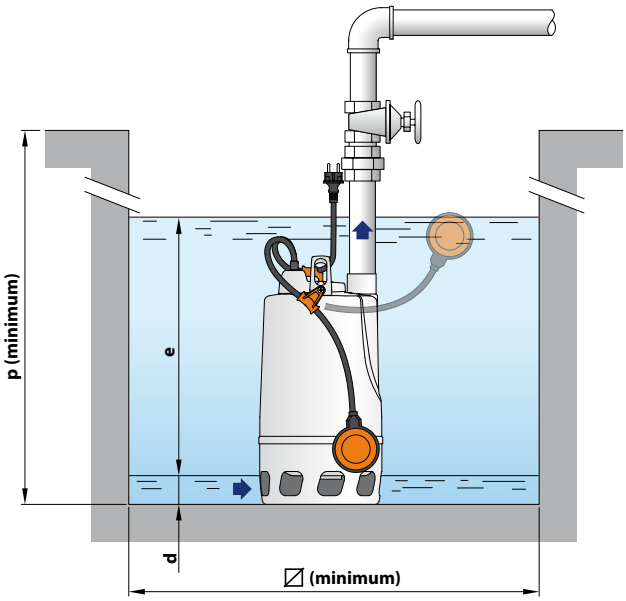

TYPE		PORT	DIMENSIONS mm								kg		PALLET CAPACITY
Single-phase	**Three-phase**	**DN**	a	b	h	h1	d	e	p	⧄	1~	3~	
RXm 4/40	**RX 4/40**	**1½"**	215	115	432	400	50	adjustable	500	500	14.8	13.9	45
RXm 5/40	**RX 5/40**										16.0	14.8	45

※ Version with 'GM' magnetic float switch

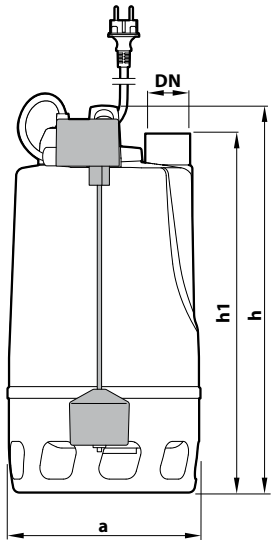

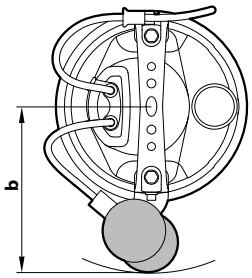

Typical installation

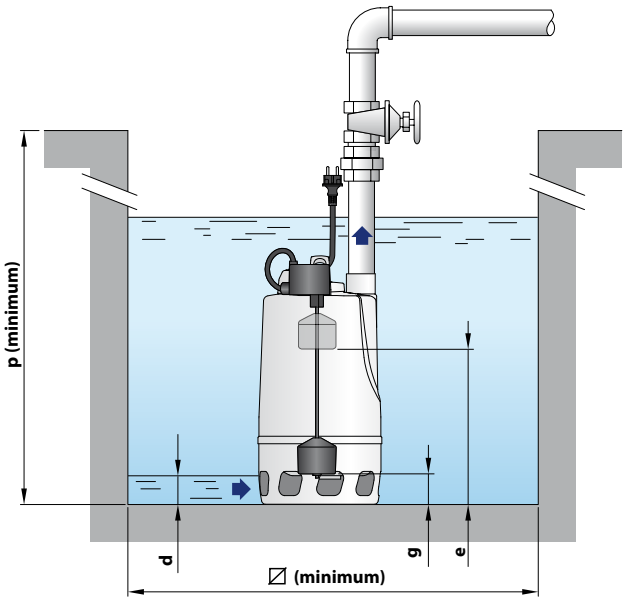

TYPE	PORT	DIMENSIONS mm									kg	PALLET CAPACITY
Single-phase	**DN**	a	b	h	h1	d	e	g (adjustable)	p	⧄	1~	
RXm 4/40 - GM	**1½"**	215	186.5	432	400	50	320	80	500	350	15.2	36
RXm 5/40 - GM											16.2	36

MATERIALS AND COMPONENTS

1	**Outer sleeve**	**AISI 304** stainless steel with ISO 228/1 threaded port
2	**Suction filter**	Stainless steel **AISI 304**
3	**Diffuser**	Stainless steel **AISI 304**
4	**Impeller**	VORTEX in **AISI 304** stainless steel
5	**Motor sleeve**	Stainless steel **AISI 304**
6	**Motor cover**	Stainless steel **AISI 304**
7	**Motor shaft**	Stainless steel **AISI 431**

8 Double mechanical seal with interposed oil chamber

Seal	Shaft	Location	Materials
MG1-14D SIC	Ø 14 mm	Motor side	Silicon carbide / Graphite / NBR
		Pump side	Silicon carbide/Silicon carbide/NBR

9 Capacitor
(exclusive to single-phase models)

10 Electric motor

RXm: single-phase 230 V - 50 Hz with winding integrated thermal motor protection
RX: three-phase 400 V - 50 Hz

– Continuous running duty S1
– Insulation: Class F
– Protection rating IP X8

11 Power cord

Type 'H07 RN-F
(Schuko plug exclusive to single-phase models)
※ Standard length 5 metres

12 Float switch
(exclusive to single-phase models)

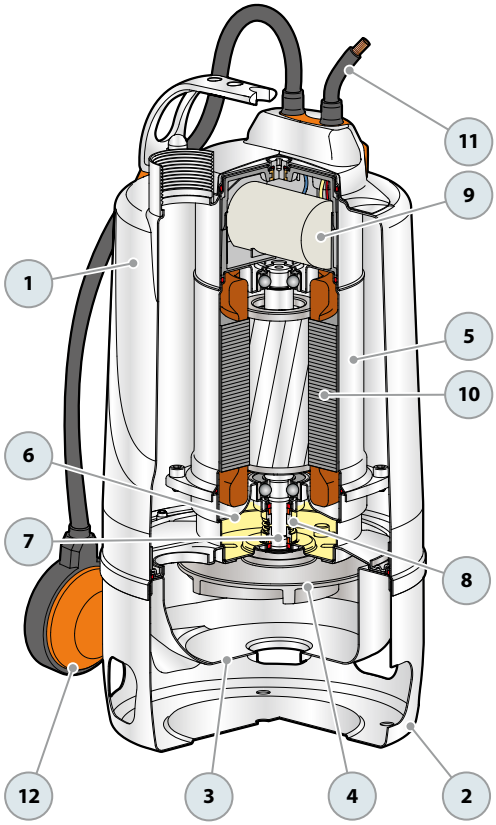

Sewage
Domestic use
Civil use
Industrial use

※ **Powerful and robust high-efficiency pumps made entirely of stainless steel**

※ **VX-ST constructed entirely from stainless steel, VX-ST submersible pumps offer superior corrosion and abrasion.**

PERFORMANCE RANGE

- Flow rate up to **700 l/min** (42 m³/h)
- Head up to **17 m**

INSTALLATION AND USE

VX-ST stainless steel submersible pumps are designed for sewage drainage in **domestic, civil, and industrial** settings where suspended solids are present in the water, such as sludge-mixed water, groundwater, or surface water.

They are also perfect for pumping out flooded areas like basements, underground parking garages, car wash stations, and emptying septic tanks and sewage systems.

※ The hydraulic configuration of the **VORTEX** volute and impeller results from advanced fluid dynamics calculations, delivering superior performance and efficiency for notable energy savings.

※ The **VORTEX** impeller can handle solids up to **50 mm** in diameter. Its unique design ensures safe operation against clogging.

INCLUDES

※ Power cable length **10 m**
※ Float switch (exclusive to single-phase models)

APPLICATION LIMITS

- Depth below water level up to **5 m** (with an appropriately sized power cable)
- Liquid temperature up to **+40 °C**
- Suspended solids transfer:
  - up to **Ø 40 mm** for VX /35-ST
  - up to **Ø 50 mm** for VX /50-ST
- **Minimum immersion for continuous service:**
  - 290 mm for VX 8-ST and VX 10-ST
  - 330 mm for VX 15-ST
  - 360 mm for VX 20-ST

AVAILABLE UPON REQUEST

※ AISI 316L stainless steel pump shaft
※ Different voltage requirements 60 Hz frequency

PATENTS - TRADE MARKS - MODELS

- Patent No. EP2313658
- Patent No. IT0001428923

CURVES AND PERFORMANCE DATA

50 Hz

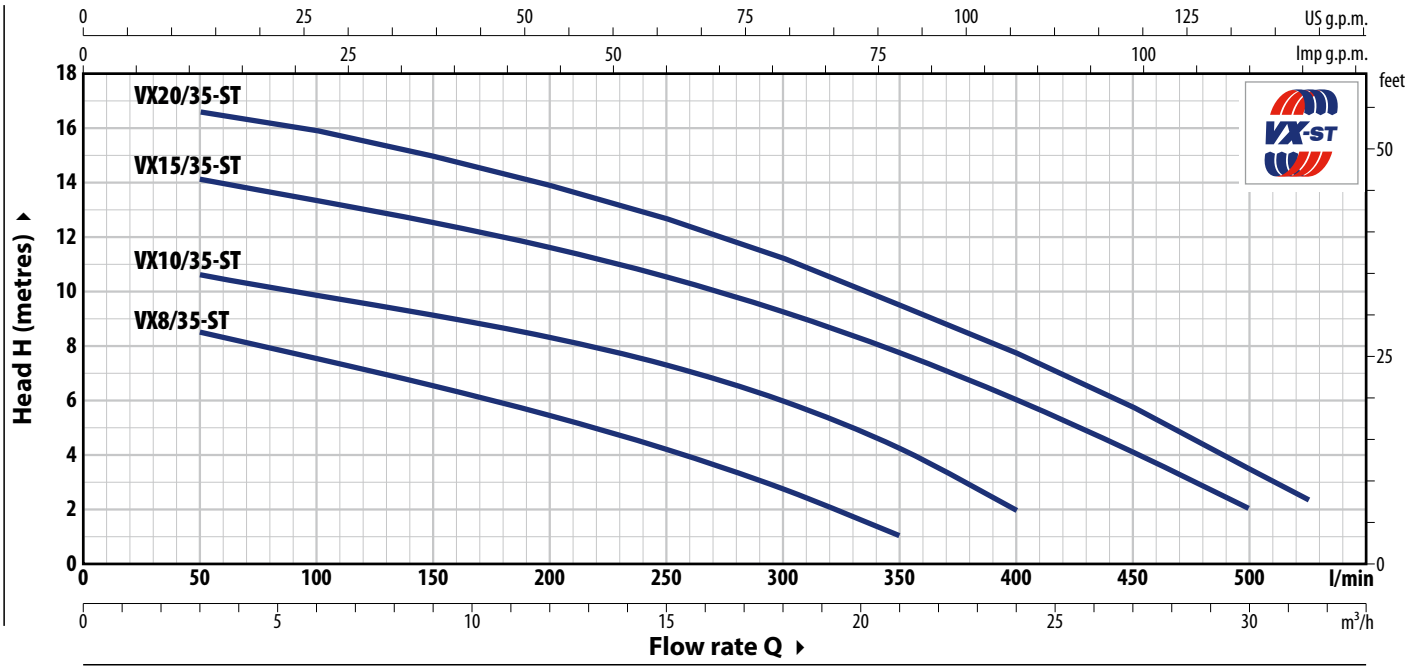

TYPE		POWER (P2)		Q m³/h	0	3	6	12	18	21	24	27	30	31.5
Single-phase	Three-phase	kW	HP	Q l/min	0	50	100	200	300	350	400	450	500	525
VXm 8/35 -ST	VX 8/35 -ST	0.55	0.75	H metres	9.5	8.5	7.5	5.4	2.7	1				
VXm 10/35-ST	VX 10/35-ST	0.75	1		11.5	10.5	10	8.3	6	4	2			
VXm 15/35-ST	VX 15/35-ST	1.1	1.5		15	14	13.5	11.7	9.2	7.7	6	4	2	
VXm 20/35-ST	VX 20/35-ST	1.5	2		17	16.5	16	14	11	9.5	7.7	5.7	3.5	2.5

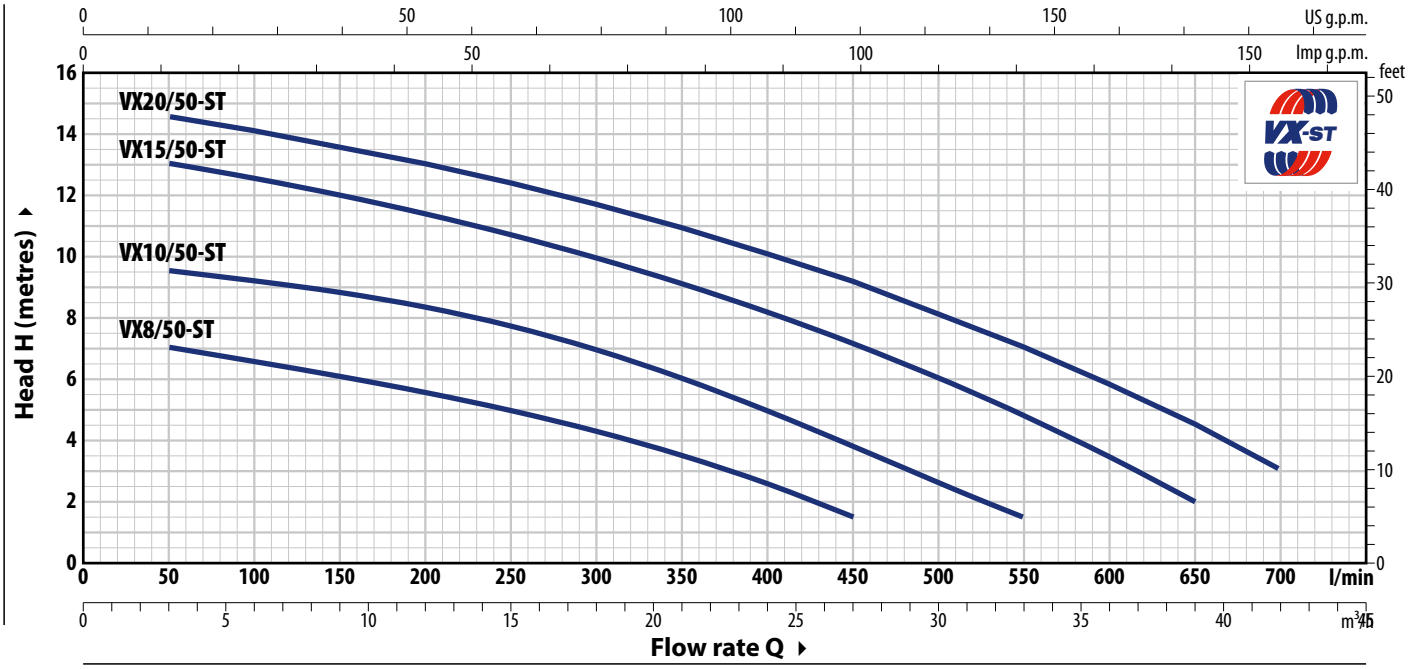

TYPE		POWER (P2)		Q m³/h	0	3	6	12	18	24	27	30	33	36	39	42
Single-phase	Three-phase	kW	HP	Q l/min	0	50	100	200	300	400	450	500	550	600	650	700
VXm 8/50 -ST	VX 8/50 -ST	0.55	0.75	H metres	7.5	7	6.6	5.7	4.2	2.5	1.5					
VXm 10/50-ST	VX 10/50-ST	0.75	1		10	9.5	9.2	8.5	7	5	3.8	2.7	1.5			
VXm 15/50-ST	VX 15/50-ST	1.1	1.5		13.5	13	12.5	11.5	10	8	7	6	4.7	3.3	2	
VXm 20/50-ST	VX 20/50-ST	1.5	2		15	14.5	14	13	11.7	10	9	8.2	7	5.8	4.5	3

Q = Flow rate **H** = Total manometric head

Performance curves comply with EN ISO 9906 Grade 3B tolerance limits.

ABSORPTION

TYPE **Single-phase**	VOLTAGE **230 V**
VXm 8/35 -ST	4.3 A
VXm 10/35-ST	5.5 A
VXm 15/35-ST	7.0 A
VXm 20/35-ST	9.6 A
VXm 8/50 -ST	4.3 A
VXm 10/50-ST	5.5 A
VXm 15/50-ST	7.0 A
VXm 20/50-ST	9.6 A

TYPE **Three-phase**	VOLTAGE **400 V**
VX 8/35 -ST	**1.6** A
VX 10/35-ST	**2.2** A
VX 15/35-ST	**2.7** A
VX 20/35-ST	**3.7** A
VX 8/50 -ST	**1.6** A
VX 10/50-ST	**2.2** A
VX 15/50-ST	**2.7** A
VX 20/50-ST	**3.7** A

DIMENSIONS AND WEIGHT

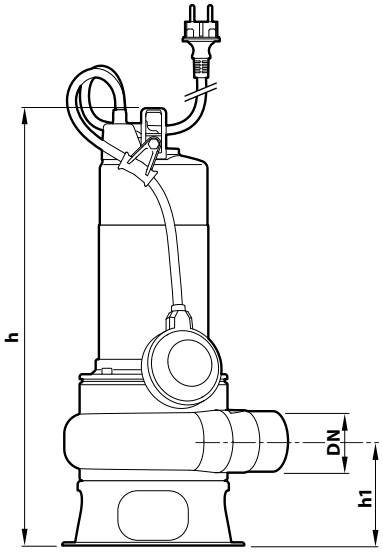

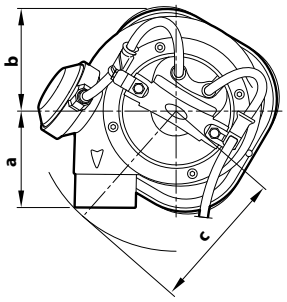

Typical installation

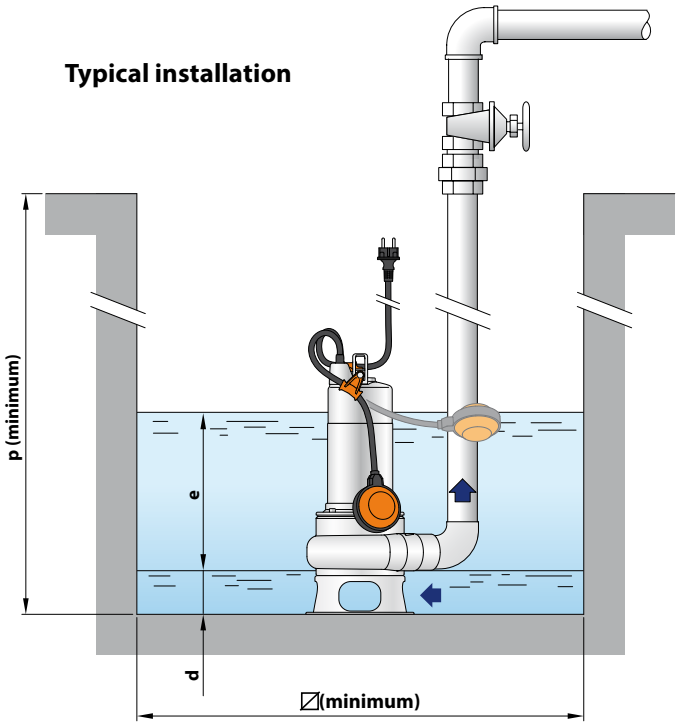

TYPE **Single-phase**	**Three-phase**	PORT **DN**	Passage of solid bodies	DIMENSIONS mm a	b	c	h	h1	d	e	p	∅	kg 1~	3~
VXm 8/35 -ST	**VX 8/35 -ST**	**1½"**	**Ø 40 mm**	95	96	140	424	106	55	adjustable	500	500	11.2	10.1
VXm 10/35-ST	**VX 10/35-ST**						439						12.7	11.5
VXm 15/35-ST	**VX 15/35-ST**						472						15.5	13.9
VXm 20/35-ST	**VX 20/35-ST**						502						17.7	15.5
VXm 8/50 -ST	**VX 8/50 -ST**	**2"**	**Ø 50 mm**	102	96	145	435	107	60				11.4	10.3
VXm 10/50-ST	**VX 10/50-ST**						450						12.9	11.7
VXm 15/50-ST	**VX 15/50-ST**						483						15.7	14.1
VXm 20/50-ST	**VX 20/50-ST**						513						17.9	15.7

PALLET CAPACITY

TYPE **Single-phase**	**Three-phase**	NO. OF PUMPS
VXm 8/35 -ST	**VX 8/35 -ST**	45
VXm 10/35-ST	**VX 10/35-ST**	45
VXm 15/35-ST	**VX 15/35-ST**	30
VXm 20/35-ST	**VX 20/35-ST**	30
VXm 8/50 -ST	**VX 8/50 -ST**	45
VXm 10/50-ST	**VX 10/50-ST**	45
VXm 15/50-ST	**VX 15/50-ST**	30
VXm 20/50-ST	**VX 20/50-ST**	30

MATERIALS AND COMPONENTS

1	**Pump body**	**AISI 304** stainless steel with ISO 228/1 threaded port
2	**Base**	Stainless steel **AISI 304**
3	**Impeller**	VORTEX type in **AISI 304** stainless steel
4	**Motor sleeve**	Stainless steel **AISI 304**
5	**Motor cover**	Stainless steel **AISI 304** Cast iron with cataphoresis treatment for VX 15-20 ST
6	**Motor shaft**	Stainless steel **AISI 431**

7 **Double mechanical seal in oil chamber**

Seal	Shaft	Location	Materials
MG1-14D SIC	Ø 14 mm	Motor side	Silicon carbide / Graphite / NBR
		Pump side	Silicon carbide/Silicon carbide/NBR

8 **Capacitor**
(exclusive to single-phase models)

9 **Electric motor**

VXm-ST: single-phase 230 V - 50 Hz with winding integrated thermal motor protection
VX-ST: three-phase 400 V - 50 Hz

– Insulation: class F
– Protection rating: IP X8

10 **Power cord**

Power cable encapsulated with epoxy resin both in the grommet area and where the conductors exit the sheath, for absolute insulation against moisture and water.

Type 'H07 RN-F' (Schuko plug exclusive to single-phase models)

※ Standard length 10 metres

11 **Float switch** (exclusive to single-phase models)

12 **Tilting device for the float cable**
(exclusive to single-phase models)
Patent No. IT0001428923

13 **Power cable strain relief**
Patent No. EP2313658

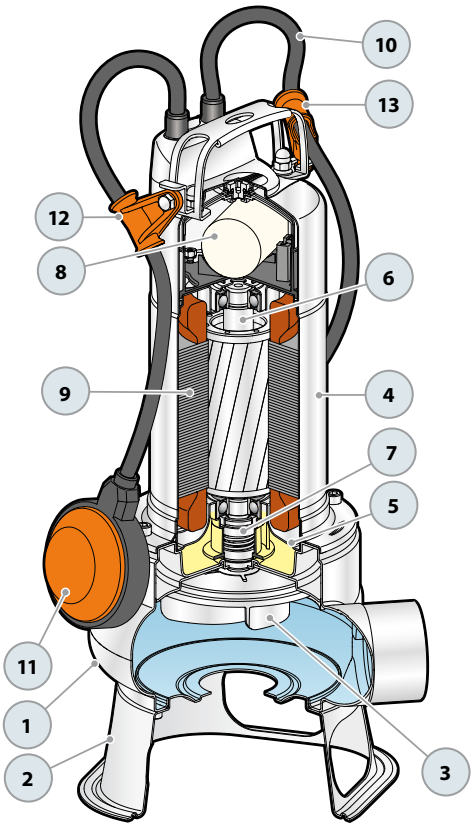

Sewage
Domestic use
Civil use
Industrial use

※ **Powerful and robust high-efficiency pumps made entirely of stainless steel**

※ **Constructed entirely from stainless steel, BC-ST submersible pumps offer superior corrosion and abrasion.**

PERFORMANCE RANGE

- Flow rate up to **850 l/min** (51 m³/h)
- Head up to **17 m**

INSTALLATION AND USE

BC-ST stainless steel submersible pumps are designed to drain dirty and **sewage water** in **domestic, civil, and industrial settings**. Featuring a **TWO-CHANNEL** impeller, they can efficiently pump liquids containing suspended solids up to 50 mm in diameter with short fibers and handle wastewater, sewage, surface water, and sludge-mixed water in residential properties.

※ The hydraulic configuration of the volute and **TWO-CHANNEL** impeller results from advanced fluid dynamics calculations, delivering superior performance and efficiency for notable energy savings.

※ The **TWO-CHANNEL** impeller provides excellent performance and high energy efficiency, generating increased pressure for pumping solids up to **50 mm** in diameter, making it the best choice for wastewater drainage.

INCLUDES

※ Power cable length **10 m**
※ Float switch (exclusive to single-phase models)

APPLICATION LIMITS

- Depth below water level up to **5 m** (with an appropriately sized power cable)
- Liquid temperature up to **+40 °C**
- Capable of processing suspended solids up to **Ø 50 mm**
- **Minimum immersion for continuous service:**
  - **290 mm for BC 10/50-ST**
  - **330 mm for BC 15/50-ST**
  - **360 mm for BC 20/50-ST**

AVAILABLE UPON REQUEST

※ AISI 316L stainless steel pump shaft
※ Different voltage requirements 60 Hz frequency

PATENTS - TRADE MARKS - MODELS

- Patent No. EP2313658
- Patent No. IT0001428923

CURVES AND PERFORMANCE DATA

50 Hz

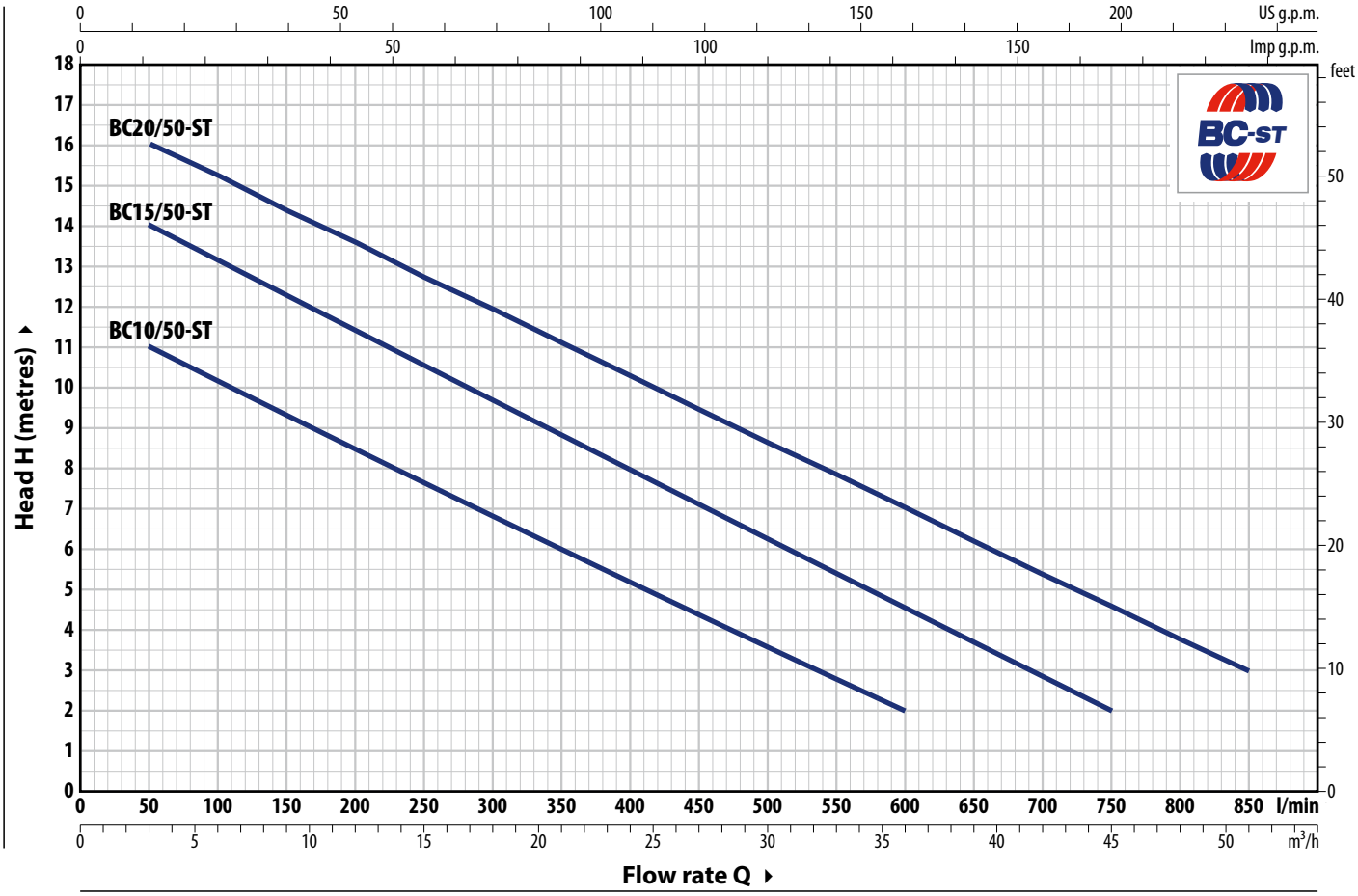

TYPE		POWER (P2)		Q m³/h	0	3	6	12	18	24	30	36	42	45	51
Single-phase	**Three-phase**	**kW**	**HP**	Q l/min	**0**	**50**	**100**	**200**	**300**	**400**	**500**	**600**	**700**	**750**	**850**
BCm 10/50-ST	**BC 10/50-ST**	0.75	1		12	11	10	8.5	7	5	3.6	2			
BCm 15/50-ST	**BC 15/50-ST**	1.1	1.5	**H** metres	15	14	13	11.5	9.7	8	6.3	4.6	3	2	
BCm 20/50-ST	**BC 20/50-ST**	1.5	2		17	16	15.3	13.5	12	10.3	8.6	7	5.3	4.5	3

Q = Flow rate **H** = Total manometric head

Performance curves comply with EN ISO 9906 Grade 3B tolerance limits.

ABSORPTION

TYPE **Single-phase**	VOLTAGE **230 V**
BCm 10/50-ST	5.5 A
BCm 15/50-ST	8.0 A
BCm 20/50-ST	10.0 A

TYPE **Three-phase**	VOLTAGE **400 V**
BC 10/50-ST	2.2 A
BC 15/50-ST	3.1 A
BC 20/50-ST	3.9 A

DIMENSIONS AND WEIGHT

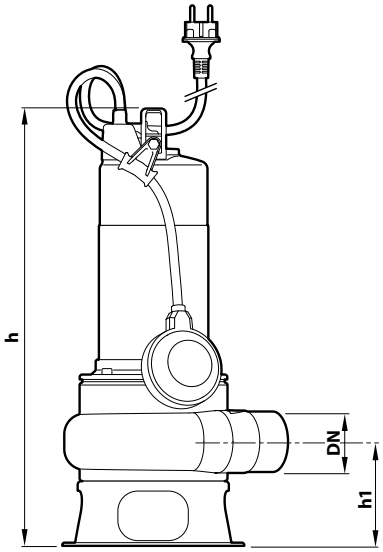

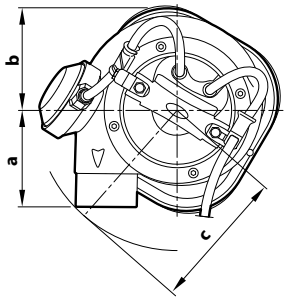

Typical installation

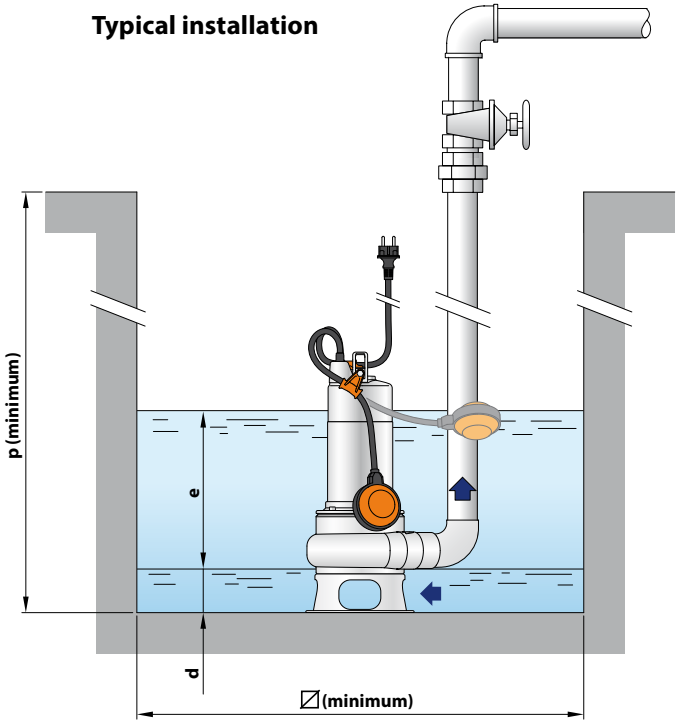

TYPE		PORT	Passage of solid bodies	DIMENSIONS mm									kg	
Single-phase	**Three-phase**	**DN**		a	b	c	h	h1	d	e	p	∅	1~	3~
BCm 10/50-ST	**BC 10/50-ST**						450						13.4	12.2
BCm 15/50-ST	**BC 15/50-ST**	**2"**	**Ø 50 mm**	102	95	145	483	107	60	adjustable	500	500	16.0	14.4
BCm 20/50-ST	**BC 20/50-ST**						513						18.2	16.0

PALLET CAPACITY

TYPE		NO. OF PUMPS
Single-phase	**Three-phase**	
BCm 10/50-ST	**BC 10/50-ST**	45
BCm 15/50-ST	**BC 15/50-ST**	30
BCm 20/50-ST	**BC 20/50-ST**	30

MATERIALS AND COMPONENTS

1	**Pump body**	**AISI 304** stainless steel with ISO 228/1 threaded port
2	**Base**	Stainless steel **AISI 304**
3	**Impeller**	TWO-CHANNEL type in micro-cast **AISI 304** stainless steel.
4	**Motor sleeve**	Stainless steel **AISI 304**
5	**Motor cover**	**AISI 304** stainless steel for BC 10/50-ST Cast iron with cataphoresis treatment for BC 15/50-ST, BC 20/50-ST
6	**Motor shaft**	Stainless steel **AISI 431**

7 Double mechanical seal in oil chamber

Seal	Shaft	Location	Materials
MG1-14D SIC	Ø 14 mm	Motor side	Silicon carbide / Graphite / NBR
		Pump side	Silicon carbide/Silicon carbide/NBR

8 Capacitor
(exclusive to single-phase models)

9 Electric motor

BCm-ST: single-phase 230 V - 50 Hz with winding integrated thermal motor protection
BC-ST: three-phase 400 V - 50 Hz
– Insulation: class F
– Protection rating: IP X8

10 Power cord

Power cable encapsulated with epoxy resin both in the grommet area and where the conductors exit the sheath, for absolute insulation against moisture and water.

Type 'H07 RN-F' (Schuko plug exclusive to single-phase models)

※ Standard length 10 metres

11 Float switch (exclusive to single-phase models)

12 Tilting device for the float cable
(exclusive to single-phase models)
Patent No. IT0001428923

13 Power cable strain relief
Patent No. EP2313658

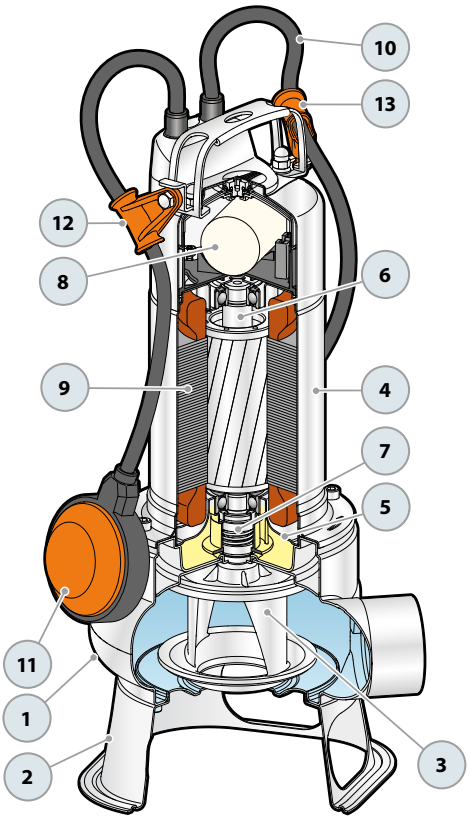

SEWAGE LIFTING SYSTEM KIT VX-ST - BC-ST

VERSION WITH HORIZONTAL DELIVERY AND ¾" GUIDE PIPES

For **VX /35-ST**	CODE ASSPVX35ST	DN **2"**
For **VX /50-ST , BC /50-ST**	CODE ASSPVX50ST	DN **2"**

※ Kit consisting of:

Coupling foot

Solids rail with ring nut and seal

Support for guide tubes

VERSION WITH VERTICAL DELIVERY AND ¾" GUIDE PIPES

For **VX /35-ST**	CODE ASSPVX35STV	DN **2½"**
For **VX /50-ST, BC /50-ST**	CODE ASSPVX50STV	DN **2½"**

※ Kit consisting of:

Coupling foot complete with counterflange

Solids rail with ring nut and seal

Support for guide tubes

● ACCESSORIES AVAILABLE FOR ORDER

RUNNING GUIDE

※ For **VX /35-ST**	CODE ASSFL005
※ For **VX /50-ST , BC /50-ST**	CODE ASSFL006

Complete with ring nut and gasket

GUIDE TUBE SUPPORT

※ For Ø ¾ **"** guide tubes	CODE 859SV340INTFA

To ensure stability, insert a support every 2 metres along the guide tube

GUIDE TUBE (AISI 304 stainless steel)

※ 2 metres Ø ¾" guide tube	CODE 54SARTG0052F
※ 3 metres Ø ¾" guide tube	CODE 54SARTG0053F
※ 6 metres Ø ¾" guide tube	CODE 54SARTG0056F

DIMENSIONS (Version with horizontal outlet)

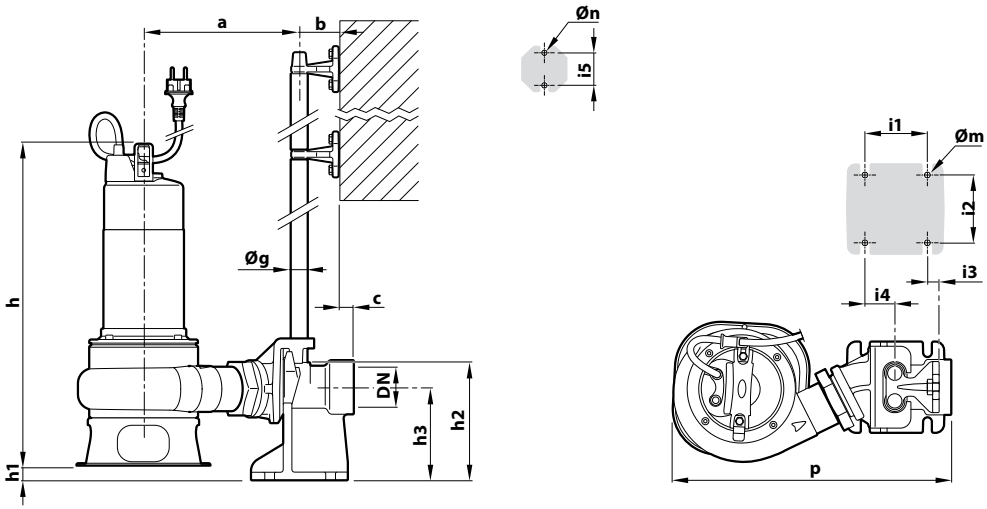

TYPE		Passage of solid bodies	PORT	DIMENSIONS mm															
Single-ph.	**Three-ph.**	mm	DN	a	b	c	p	h	h1	h2	h3	i1	i2	i3	i4	i5	Øg	Øm	Øn
VXm 8/35 -ST	**VX 8/35 -ST**	**40**	**2"**	214	61	17	386	424	24	165	130	85	94	16	40	50	¾"	12	11
VXm 10/35 -ST	**VX 10/35 -ST**							439											
VXm 15/35 -ST	**VX 15/35 -ST**							472											
VXm 20/35 -ST	**VX 20/35 -ST**							502											
VXm 8/50 -ST	**VX 8/50 -ST**	**50**	**2"**	221			372	435	23										
VXm 10/50 -ST	**VX 10/50 -ST**							450											
VXm 15/50 -ST	**VX 15/50 -ST**							483											
VXm 20/50 -ST	**VX 20/50 -ST**							513											
BCm 10/50 -ST	**BC 10/50 -ST**	**50**	**2"**					450											
BCm 15/50 -ST	**BC 15/50 -ST**							483											
BCm 20/50 -ST	**BC 20/50 -ST**							513											

DIMENSIONS (Version with vertical delivery)

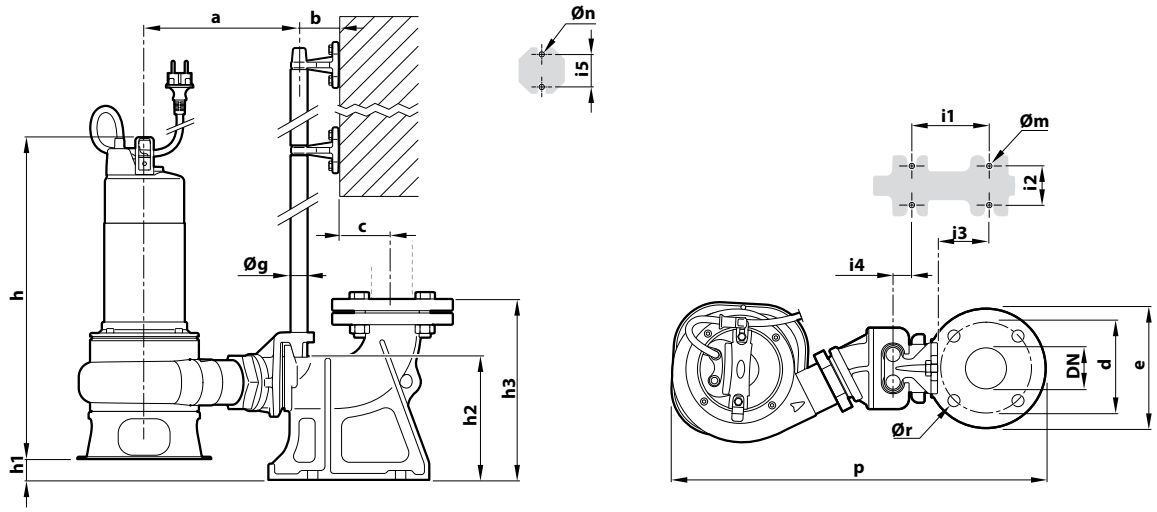

TYPE		Passage of solid bodies	PORT	DIMENSIONS mm																	
Single-ph.	**Three-ph.**	mm	DN	a	b	c	d	e	p	h	h1	h2	h3	i1	i2	i3	i4	i5	Øg	Øm	Øn	Ør
VXm 8/35 -ST	**VX 8/35 -ST**	**40**	**2½"**	207	61	52	125	165	495	424	22	164	215	120	72	62	3	50	¾"	14	11	18
VXm 10/35 -ST	**VX 10/35 -ST**									439												
VXm 15/35 -ST	**VX 15/35 -ST**									472												
VXm 20/35 -ST	**VX 20/35 -ST**									502												
VXm 8/50 -ST	**VX 8/50 -ST**	**50**	**2½"**	212					501	435	26											
VXm 10/50 -ST	**VX 10/50 -ST**									450												
VXm 15/50 -ST	**VX 15/50 -ST**									483												
VXm 20/50 -ST	**VX 20/50 -ST**									513												
BCm 10/50 -ST	**BC 10/50 -ST**	**50**	**2½"**							450												
BCm 15/50 -ST	**BC 15/50 -ST**									483												
BCm 20/50 -ST	**BC 20/50 -ST**									513												

Sewage
Domestic use
Civil use
Industrial use

※ **They are recommended when an pump of high efficiency, quality and durability is required**

※ **Constructed entirely from stainless steel, VX-MF submersible pumps offer superior corrosion and abrasion.**

PERFORMANCE RANGE

- Flow rate up to **750 l/min** (45 m^3/h)
- Head up to **15.5 m**

INSTALLATION AND USE

The **VX-MF** micro-cast stainless steel submersible pumps are designed for demanding working conditions, ideal for sewage drainage in **domestic, civil, and industrial settings** where suspended solids are present, such as water mixed with sludge, groundwater, or surface water. such as sludge-mixed water, groundwater, or surface water.

They are also perfect for pumping out flooded areas like basements, underground parking garages, car wash stations, and emptying septic tanks and sewage systems.

※ The hydraulic configuration of the **VORTEX** volute and impeller results from advanced fluid dynamics calculations, delivering superior performance and efficiency for notable energy savings.

※ The **VORTEX** impeller can handle solids up to **50 mm** in diameter. Its unique design ensures safe operation against clogging.

INCLUDES

※ Power cable length **10 m**
※ Float switch (exclusive to single-phase models)

APPLICATION LIMITS

- Depth below water level up to **5 m** (with an appropriately sized power cable)
- Liquid temperature up to **+40 °C**
- Suspended solids transfer:
  - up to **Ø 40 mm** for VX /35-MF
  - up to **Ø 50 mm** for VX /50-MF
- **Minimum immersion for continuous service:**
  – 290 mm for VX 8-MF and VX 10-MF
  – 330 mm for VX 15-MF
  – 360 mm for VX 20-MF

AVAILABLE UPON REQUEST

※ Different voltage requirements 60 Hz frequency

PATENTS - TRADE MARKS - MODELS

- Patent No. EP2313658
- Patent No. IT0001428923

CURVES AND PERFORMANCE DATA

50 Hz

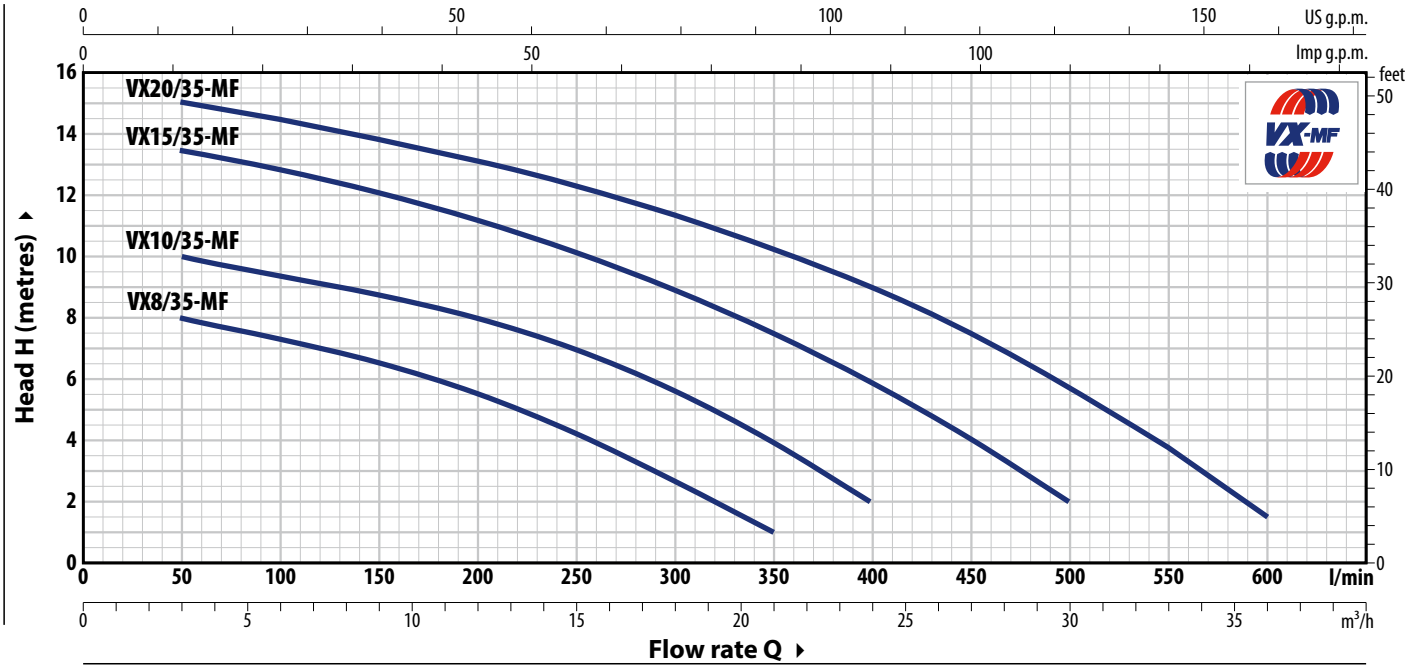

TYPE		POWER (P2)		Q m³/h	0	3	6	12	18	21	24	27	30	33	36
Single-phase	Three-phase	kW	HP	Q l/min	**0**	**50**	**100**	**200**	**300**	**350**	**400**	**450**	**500**	**550**	**600**
VXm 8/35 -MF	VX 8/35 -MF	0.55	0.75	H metres	9	8	7.5	5.5	2.7	1					
VXm 10/35-MF	VX 10/35-MF	0.75	1		11	10	9.5	8	5.7	4	2				
VXm 15/35-MF	VX 15/35-MF	1.1	1.5		14	13.5	12.8	11.2	9	7.7	6	4	2		
VXm 20/35-MF	VX 20/35-MF	1.5	2		15.5	15	14.5	13	11.5	10.3	9	7.5	5.8	3.8	1.5

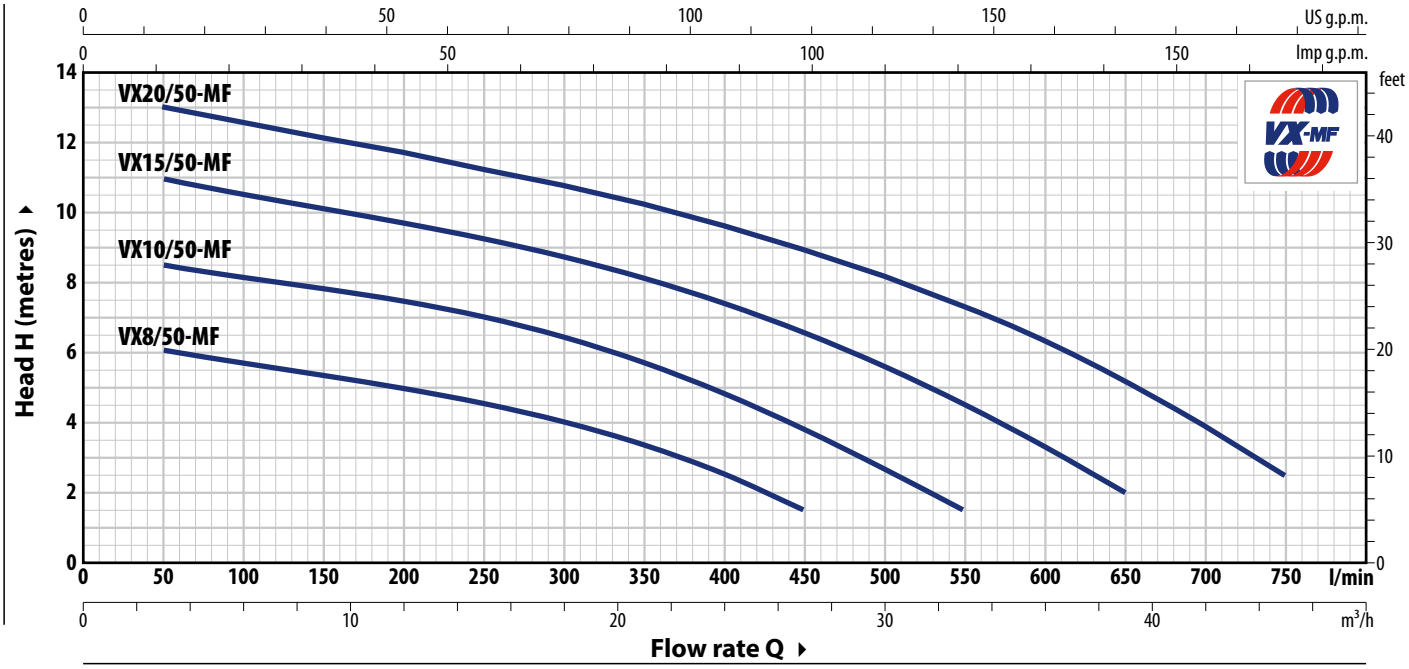

TYPE		POWER (P2)		Q m³/h	0	3	6	12	18	24	27	30	33	36	39	45
Single-phase	Three-phase	kW	HP	Q l/min	**0**	**50**	**100**	**200**	**300**	**400**	**450**	**500**	**550**	**600**	**650**	**750**
VXm 8/50 -MF	VX 8/50 -MF	0.55	0.75	H metres	6.5	6	5.8	5	4	2.5	1.5					
VXm 10/50-MF	VX 10/50-MF	0.75	1		9	8.5	8.2	7.5	6.5	5	3.8	2.5	1.5			
VXm 15/50-MF	VX 15/50-MF	1.1	1.5		11.5	11	10.5	9.8	8.7	7.5	6.5	5.5	4.5	3.5	2	
VXm 20/50-MF	VX 20/50-MF	1.5	2		13.5	13	12.5	11.5	10.7	9.5	9	8	7.5	6.5	5	2.5

Q = Flow rate **H** = Total manometric head

Performance curves comply with EN ISO 9906 Grade 3B tolerance limits.

ABSORPTION

TYPE **Single-phase**	VOLTAGE **230 V**
VXm 8/35 -MF	4.3 A
VXm 10/35-MF	5.5 A
VXm 15/35-MF	7.0 A
VXm 20/35-MF	9.6 A
VXm 8/50 -MF	4.3 A
VXm 10/50-MF	5.5 A
VXm 15/50-MF	7.0 A
VXm 20/50-MF	9.6 A

TYPE **Three-phase**	VOLTAGE **400 V**
VX 8/35 -MF	1.6 A
VX 10/35-MF	2.2 A
VX 15/35-MF	2.7 A
VX 20/35-MF	3.7 A
VX 8/50 -MF	1.6 A
VX 10/50-MF	2.2 A
VX 15/50-MF	2.7 A
VX 20/50-MF	3.7 A

DIMENSIONS AND WEIGHT

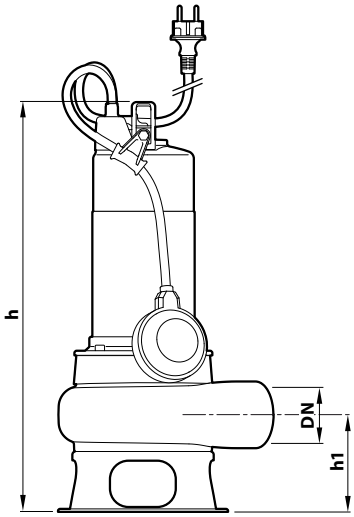

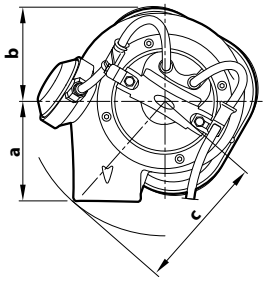

Typical installation

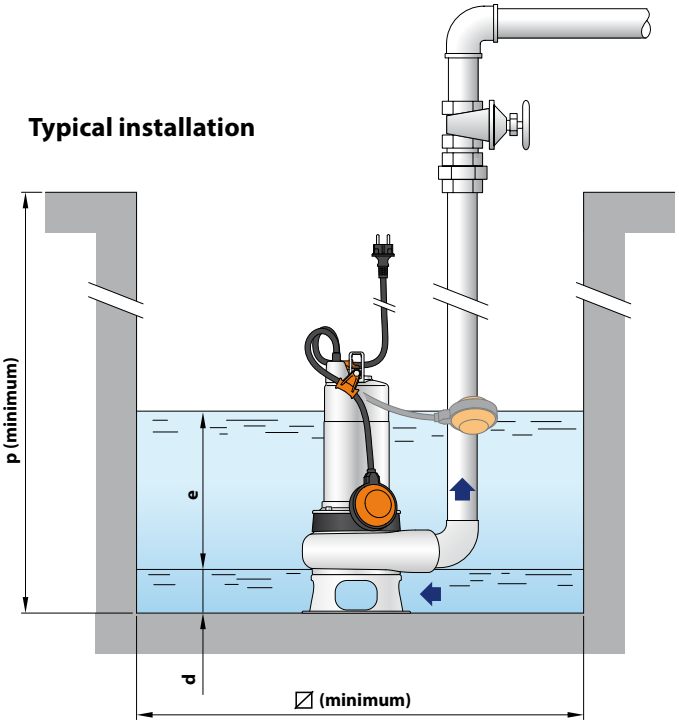

TYPE **Single-phase**	**Three-phase**	PORT **DN**	Passage of solid bodies	DIMENSIONS mm a	b	c	h	h1	d	e	p	⧄	kg 1~	3~
VXm 8/35 -MF	**VX 8/35 -MF**	**1½"**	**Ø 40 mm**	107	97	148	424	105	55	adjustable	500	500	12.9	11.8
VXm 10/35-MF	**VX 10/35-MF**						439						14.4	13.2
VXm 15/35-MF	**VX 15/35-MF**						472						17.2	15.6
VXm 20/35-MF	**VX 20/35-MF**						502						19.4	17.2
VXm 8/50 -MF	**VX 8/50 -MF**	**2"**	**Ø 50 mm**	112	97	149	435	107	60				13.2	12.1
VXm 10/50-MF	**VX 10/50-MF**						450						14.7	13.5
VXm 15/50-MF	**VX 15/50-MF**						483						17.5	15.9
VXm 20/50-MF	**VX 20/50-MF**						513						19.7	17.5

PALLET CAPACITY

TYPE **Single-phase**	**Three-phase**	NO. OF PUMPS
VXm 8/35 -MF	**VX 8/35 -MF**	45
VXm 10/35-MF	**VX 10/35-MF**	45
VXm 15/35-MF	**VX 15/35-MF**	30
VXm 20/35-MF	**VX 20/35-MF**	30
VXm 8/50 -MF	**VX 8/50 -MF**	45
VXm 10/50-MF	**VX 10/50-MF**	45
VXm 15/50-MF	**VX 15/50-MF**	30
VXm 20/50-MF	**VX 20/50-MF**	30

MATERIALS AND COMPONENTS

1	**Pump body**	Micro-cast **AISI 316L** stainless steel with ISO 228/1 threaded port
2	**Base**	Stainless steel **AISI 304**
3	**Impeller**	VORTEX type in **AISI 304** stainless steel.
4	**Motor sleeve**	Stainless steel **AISI 304**
5	**Motor cover**	**AISI 304** stainless steel for VX 8-10 MF Cast iron with cataphoresis treatment for VX 15-20 MF
6	**Motor shaft**	Stainless steel **AISI 316L**

7 **Double mechanical seal in oil chamber**

Seal	Shaft	Location	Materials
MG1-14D SIC	Ø 14 mm	Motor side	Silicon carbide / Graphite / NBR
		Pump side	Silicon carbide/Silicon carbide/NBR

8 **Capacitor** (exclusive to single-phase models)

9 **Electric motor**

VXm-MF: single-phase 230 V - 50 Hz with winding integrated thermal motor protection
VX-MF: three-phase 400 V - 50 Hz

– Insulation: class F
– Protection rating: IP X8

10 **Power cord**

Power cable encapsulated with epoxy resin both in the grommet area and where the conductors exit the sheath, for absolute insulation against moisture and water.

Type 'H07 RN-F
(Schuko plug exclusive to single-phase models)

※ Standard length 10 metres

11 **Float switch** (exclusive to single-phase models)

12 **Tilting device for the float cable**
(exclusive to single-phase models)
Patent No. IT0001428923

13 **Power cable strain relief**
Patent No. EP2313658

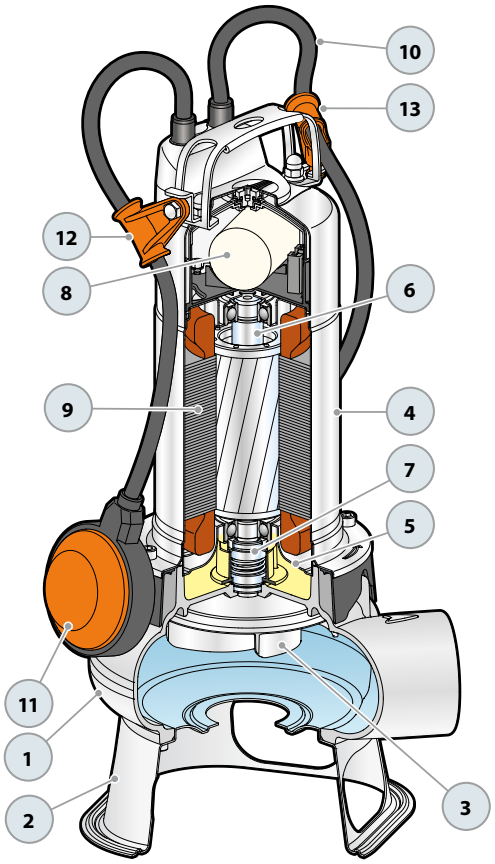

BC-MF Microcast stainless steel submersible pumps

TWO-CHANNEL

Sewage
Domestic use
Civil use
Industrial use

※ **Experience high-efficiency, quality, and durability**

※ **Constructed entirely from micro-cast stainless steel, BC-MF submersible pumps offer superior corrosion and abrasion.**

PERFORMANCE RANGE

- Flow rate up to **850 l/min** (51 m³/h)
- Head up to **17 m**

INSTALLATION AND USE

BC-MF stainless steel submersible pumps are designed to drain dirty and sewage water in domestic, civil, and industrial settings. Featuring a TWO-CHANNEL impeller, they can efficiently pump liquids containing suspended solids up to 50 mm in diameter with short fibers and handle wastewater, sewage, surface water, and sludge-mixed water in residential properties.

※ The hydraulic configuration of the volute and **TWO-CHANNEL** impeller results from advanced fluid dynamics calculations, delivering superior performance and efficiency for notable energy savings.

※ The **TWO-CHANNEL** impeller provides excellent performance and high energy efficiency, generating increased pressure for pumping solids up to **50 mm** in diameter, making it the best choice for wastewater drainage.

INCLUDES

※ Power cable length **10 m**
※ Float switch (exclusive to single-phase models)

APPLICATION LIMITS

- Depth below water level up to **5 m** (with an appropriately sized power cable)
- Liquid temperature up to **+40 °C**
- Capable of processing suspended solids up to **Ø 50 mm**
- **Minimum immersion for continuous service:**
  - **290 mm for BC 10/50-MF**
  - **330 mm for BC 15/50-MF**
  - **360 mm for BC 20/50-MF**

AVAILABLE UPON REQUEST

※ Different voltage requirements 60 Hz frequency

PATENTS - TRADE MARKS - MODELS

- Patent No. EP2313658
- Patent No. IT0001428923

CURVES AND PERFORMANCE DATA

50 Hz

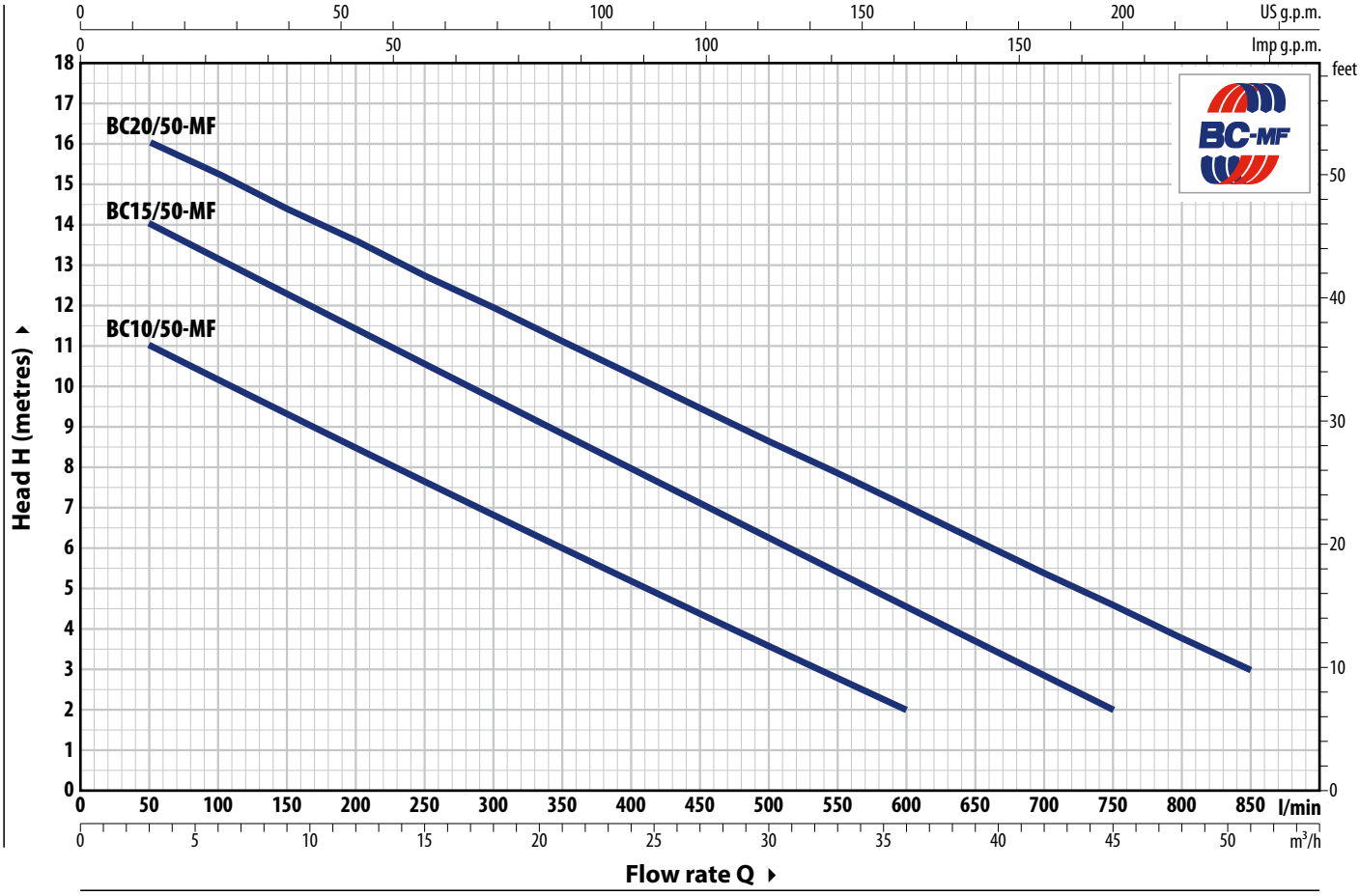

TYPE		POWER (P2)		Q m³/h	0	3	6	12	18	24	30	36	42	45	51
Single-phase	**Three-phase**	**kW**	**HP**	Q l/min	**0**	**50**	**100**	**200**	**300**	**400**	**500**	**600**	**700**	**750**	**850**
BCm 10/50-MF	**BC 10/50-MF**	0.75	1		12	11	10	8.5	7	5	3.6	2			
BCm 15/50-MF	**BC 15/50-MF**	1.1	1.5	**H** metres	15	14	13	11.5	9.7	8	6.3	4.6	3	2	
BCm 20/50-MF	**BC 20/50-MF**	1.5	2		17	16	15.3	13.5	12	10.3	8.6	7.0	5.3	4.5	3

Q = Flow rate **H** = Total manometric head

Performance curves comply with EN ISO 9906 Grade 3B tolerance limits.

ABSORPTION

TYPE **Single-phase**	VOLTAGE **230 V**
BCm 10/50-MF	5.5 A
BCm 15/50-MF	8.0 A
BCm 20/50-MF	10.0 A

TYPE **Three-phase**	VOLTAGE **400 V**
BC 10/50-MF	2.2 A
BC 15/50-MF	3.1 A
BC 20/50-MF	3.9 A

DIMENSIONS AND WEIGHT

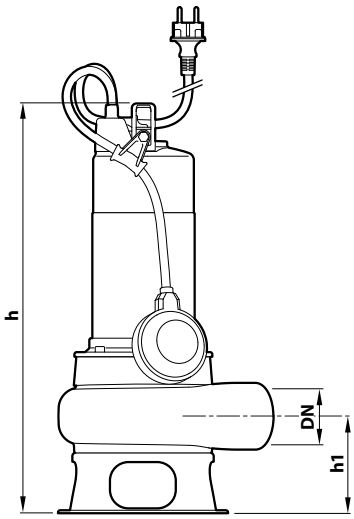

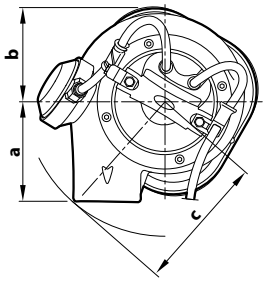

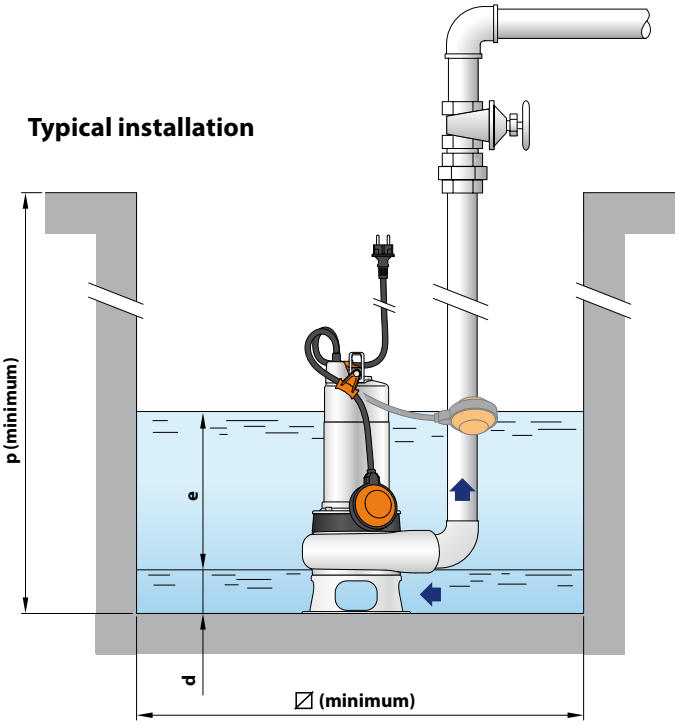

TYPE		PORT	Passage of solid bodies	DIMENSIONS mm									kg	
Single-phase	**Three-phase**	**DN**		a	b	c	h	h1	d	e	p	∅	1~	3~
BCm 10/50-MF	**BC 10/50-MF**						450						15.2	14.0
BCm 15/50-MF	**BC 15/50-MF**	**2"**	**Ø 50 mm**	102	95	145	483	107	60	adjustable	500	500	17.8	16.2
BCm 20/50-MF	**BC 20/50-MF**						513						20.0	17.8

PALLET CAPACITY

TYPE		NO. OF PUMPS
Single-phase	**Three-phase**	
BCm 10/50-MF	**BC 10/50-MF**	45
BCm 15/50-MF	**BC 15/50-MF**	30
BCm 20/50-MF	**BC 20/50-MF**	30

MATERIALS AND COMPONENTS

1	**Pump body**	Micro-cast **AISI 316L** stainless steel with ISO 228/1 threaded port
2	**Base**	Stainless steel **AISI 304**
3	**Impeller**	TWO-CHANNEL type in micro-cast **AISI 304** stainless steel.
4	**Motor sleeve**	Stainless steel **AISI 304**
5	**Motor cover**	**AISI 304** stainless steel for BC 10/50-MF Cast iron with cataphoresis treatment for BC 15/50-MF, BC 20/50-MF
6	**Motor shaft**	Stainless steel **AISI 316L**

7 Double mechanical seal in oil chamber

Seal	Shaft	Location	Materials
MG1-14D SIC	Ø 14 mm	Motor side	Silicon carbide / Graphite / NBR
		Pump side	Silicon carbide/Silicon carbide/NBR

8 Capacitor (exclusive to single-phase models)

9 Electric motor

BCm-MF: single-phase 230 V - 50 Hz with winding integrated thermal motor protection
BC-MF: three-phase 400 V - 50 Hz

– Insulation: class F
– Protection rating: IP X8

10 Power cord

Power cable encapsulated with epoxy resin both in the grommet area and where the conductors exit the sheath, for absolute insulation against moisture and water.

Type 'H07 RN-F' (Schuko plug exclusive to single-phase models)

※ Standard length 10 metres

11 Float switch (exclusive to single-phase models)

12 Tilting device for the float cable
(exclusive to single-phase models)
Patent No. IT0001428923

13 Power cable strain relief
Patent No. EP2313658

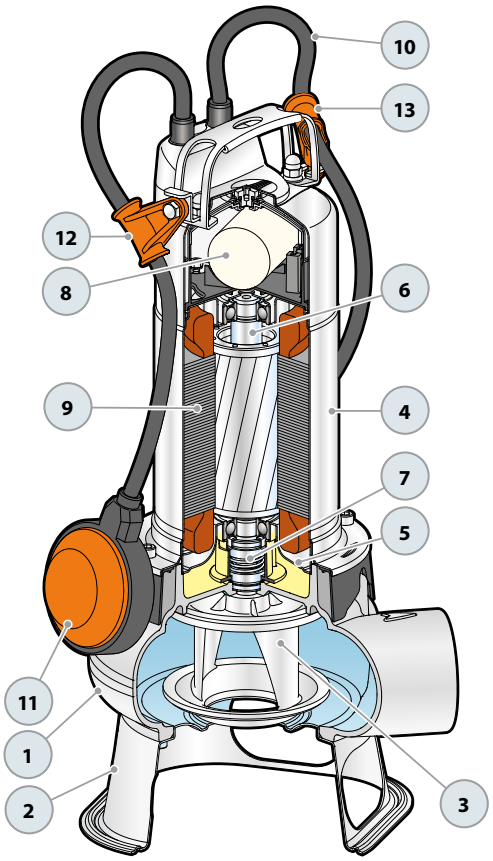

SEWAGE LIFTING SYSTEM KIT VX-MF - BC-MF

VERSION WITH HORIZONTAL DELIVERY AND ¾" GUIDE PIPES

For **VX /35-MF**	CODE ASSPVX35ST	DN **2"**
Per **VX /50-MF , BC /50-MF**	CODE ASSPVX50ST	DN **2"**

※ Kit consisting of:

Coupling foot

Solids rail with ring nut and seal

Support for guide tubes

VERSION WITH VERTICAL DELIVERY AND ¾" GUIDE PIPES

For **VX /35-MF**	CODE ASSPVX35STV	DN **2½"**
For **VX /50-MF, BC /50-MF**	CODE ASSPVX50STV	DN **2½"**

※ Kit consisting of:

Coupling foot complete with counterflange

Solids rail with ring nut and seal

Support for guide tubes

● ACCESSORIES AVAILABLE FOR ORDER

RUNNING GUIDE

※ For **VX /35-MF**	CODE ASSFL005
※ For **VX /50-MF , BC /50-MF**	CODE ASSFL006

Complete with ring nut and gasket

GUIDE TUBE SUPPORT

※ For Ø ¾ **"** guide tubes	CODE 859SV340INTFA

To ensure stability, insert a support every 2 metres along the guide tube

GUIDE TUBE (AISI 304 stainless steel)

※ 2 metres Ø ¾" guide tube	CODE 54SARTG0052F
※ 3 metres Ø ¾" guide tube	CODE 54SARTG0053F
※ 6 metres Ø ¾" guide tube	CODE 54SARTG0056F

DIMENSIONS (Version with horizontal outlet)

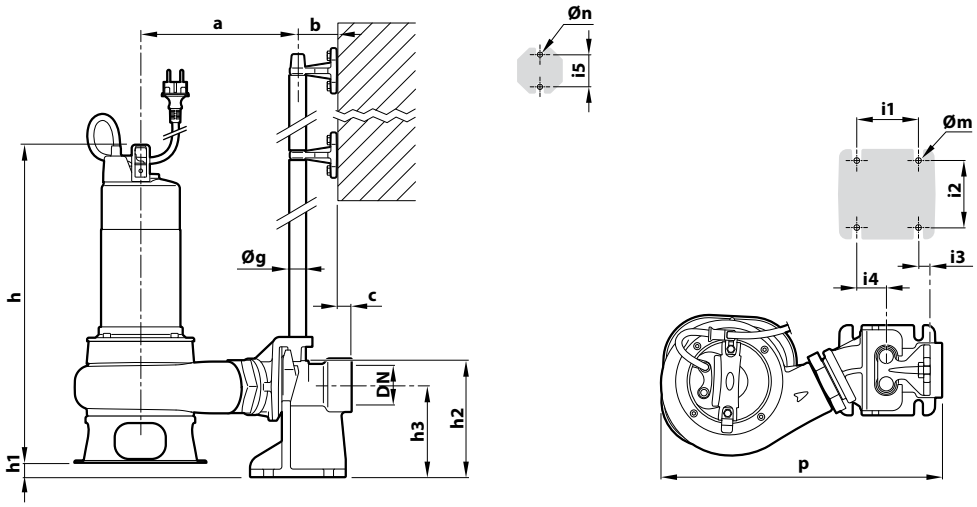

TYPE		Passage of solid bodies	PORT	DIMENSIONS mm															
Single-phase	**Three-phase**	mm	DN	a	b	c	p	h	h1	h2	h3	i1	i2	i3	i4	i5	Øg	Øm	Øn
VXm 8/35 -MF	**VX 8/35 -MF**	**40**	**2"**	222	61	17	395	424	25	165	130	85	94	16	40	50	¾"	12	11
VXm 10/35 -MF	**VX 10/35 -MF**							439											
VXm 15/35 -MF	**VX 15/35 -MF**							472											
VXm 20/35 -MF	**VX 20/35 -MF**							502											
VXm 8/50 -MF	**VX 8/50 -MF**	**50**	**2"**	226			398	435	23										
VXm 10/50 -MF	**VX 10/50 -MF**							450											
VXm 15/50 -MF	**VX 15/50 -MF**							483											
VXm 20/50 -MF	**VX 20/50 -MF**							513											
BCm 10/50 -MF	**BC 10/50 -MF**	**50**	**2"**					450											
BCm 15/50 -MF	**BC 15/50 -MF**							483											
BCm 20/50 -MF	**BC 20/50 -MF**							513											

DIMENSIONS (Version with vertical delivery)

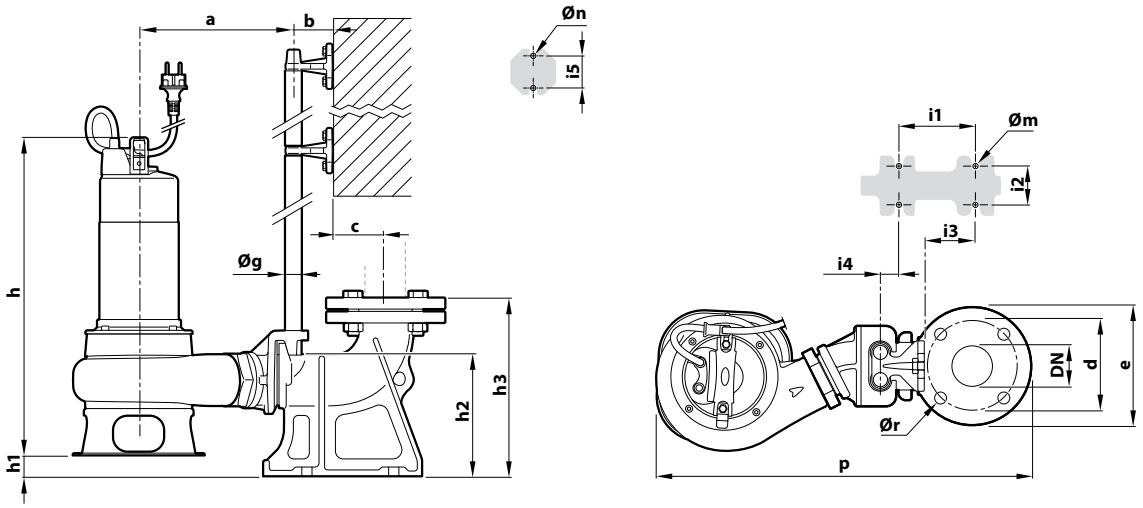

TYPE		Passage of solid bodies	PORT	DIMENSIONS mm																		
Single-phase	**Three-phase**	mm	DN	a	b	c	d	e	p	h	h1	h2	h3	i1	i2	i3	i4	i5	Øg	Øm	Øn	Ør
VXm 8/35 -MF	**VX 8/35 -MF**	**40**	**2½"**	215	61	52	125	165	503	424	23	164	215	120	72	62	3	50	¾"	14	11	18
VXm 10/35 -MF	**VX 10/35 -MF**									439												
VXm 15/35 -MF	**VX 15/35 -MF**									472												
VXm 20/35 -MF	**VX 20/35 -MF**									502												
VXm 8/50 -MF	**VX 8/50 -MF**	**50**	**2½"**	217					507	435	21											
VXm 10/50 -MF	**VX 10/50 -MF**									450												
VXm 15/50 -MF	**VX 15/50 -MF**									483												
VXm 20/50 -MF	**VX 20/50 -MF**									513												
BCm 10/50 -MF	**BC 10/50 -MF**	**50**	**2½"**							450												
BCm 15/50 -MF	**BC 15/50 -MF**									483												
BCm 20/50 -MF	**BC 20/50 -MF**									513												

D Submersible pumps for drainage

Clear waters

Domestic use

Civil use

PERFORMANCE RANGE

- Flow rate up to **300 l/min** (18 m³/h)
- Head up to **26 m**

INSTALLATION AND USE

Designed to **drain clear** or slightly dirty water, **D**-Series pumps are ideal for **domestic and civil applications**, including basement and garage flood mitigation, swimming pool and tank drainage, and non-sewage wastewater disposal. Known for their reliability, these pumps excel in automated fixed installations.

INCLUDES

※ Power cable length:
- **5 m** for D8, D10, D20
- **10 m** for D30

※ Float switch (exclusive to single-phase models)

APPLICATION LIMITS

- Depth below water level up to **5 m** (with an appropriately sized power cable)
- Liquid temperature up to **+40 °C**
- Capable of processing suspended solids up to **Ø 10 mm**
- Bottom drainage level up to **17 mm**
- **Minimum immersion for continuous service:**
  - 210 mm for D 8-10-20
  - 250 mm for D 30

AVAILABLE UPON REQUEST

※ Pumps with **10 m** power cable.
※ Different voltage requirements 60 Hz frequency

PATENTS - TRADE MARKS - MODELS

- Patent No. EP2313658
- Patent No. IT0001428923

CURVES AND PERFORMANCE DATA

50 Hz

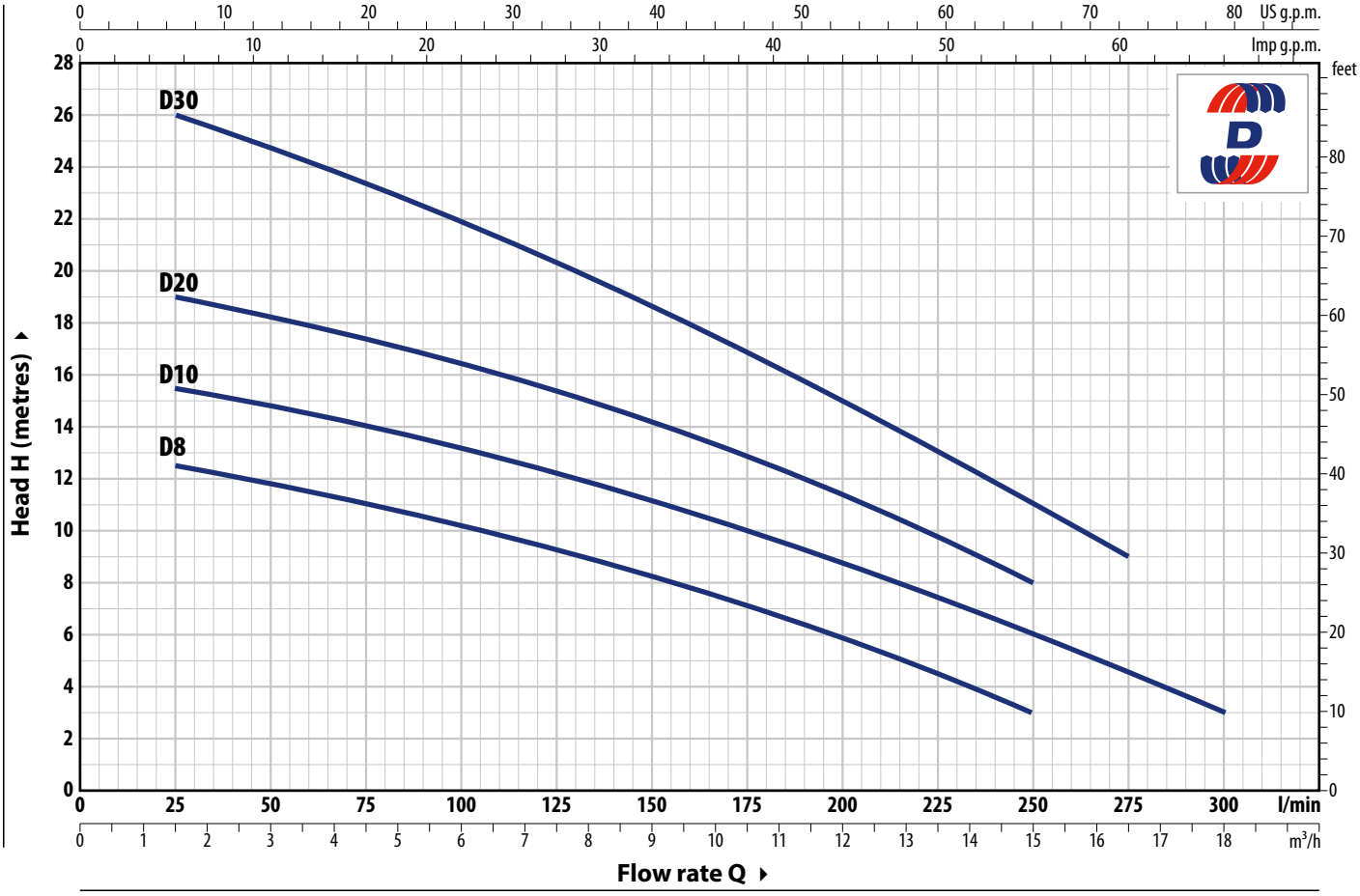

TYPE		POWER (P2)		Q m³/h	0	1.5	3.0	4.5	6.0	7.5	9.0	10.5	12.0	13.2	15.0	16.5	18.0
Single-ph.	**Three-ph.**	**kW**	**HP**	l/min	**0**	**25**	**50**	**75**	**100**	**125**	**150**	**175**	**200**	**220**	**250**	**275**	**300**
Dm 8	**D 8**	0.55	0.75	**H** metres	13	12.5	12	11	10	9	8	7	6	4.7	3		
Dm 10	**D 10**	0.75	1		16	15.5	15	14	13.2	12.2	11.2	10	8.8	7.8	6	4.5	3
Dm 20	**D 20**	0.75	1		20	19	18.5	17.5	16.5	15.5	14.3	13	11.5	10	8		
Dm 30	**D 30**	1.1	1.5		26	26	25	23.5	22	20.5	18.7	17	15	13.5	11	9	

Q = Flow rate **H** = Total manometric head

Performance curves comply with EN ISO 9906 Grade 3B tolerance limits.

ABSORPTION

TYPE **Single-ph.**	VOLTAGE **230 V**
Dm 8	3.4 A
Dm 10	5.0 A
Dm 20	5.5 A
Dm 30	7.3 A

TYPE **Three-ph.**	VOLTAGE **400 V**
D 8	1.4 A
D 10	2.0 A
D 20	2.2 A
D 30	3.0 A

DIMENSIONS AND WEIGHT

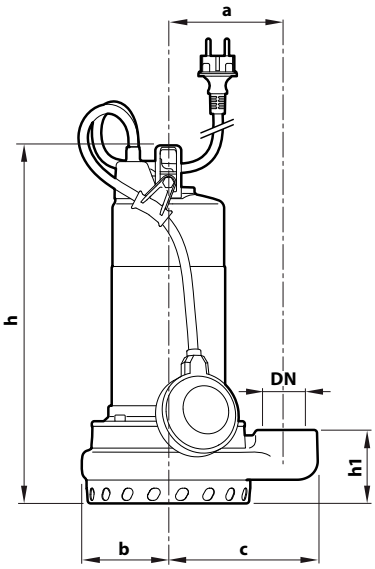

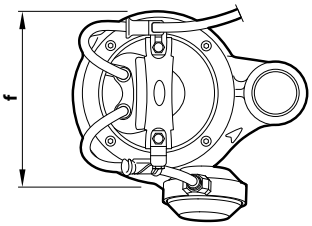

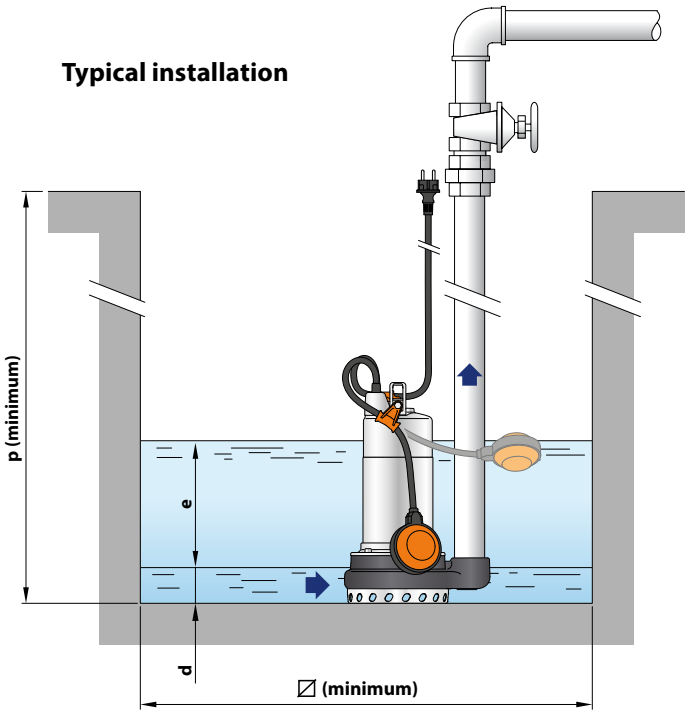

TYPE		PORT	DIMENSIONS mm										kg	
Single-ph.	**Three-ph.**	**DN**	a	b	c	f	h	h1	d	e	p	∅	1~	3~
Dm 8	**D 8**	**1½"**	115	85	147	177	338	73	17	adjustable	500	500	12.8	11.7
Dm 10	**D 10**						353						14.0	12.9
Dm 20	**D 20**												14.0	12.9
Dm 30	**D 30**			93		195	390	84					17.4	16.0

PALLET CAPACITY

TYPE		NO. OF PUMPS
Single-ph.	**Three-ph.**	
Dm 8	**D 8**	60
Dm 10	**D 10**	60
Dm 20	**D 20**	60
Dm 30	**D 30**	60

MATERIALS AND COMPONENTS

1	**Pump body**	Cast iron with cataphoresis treatment, provided with ISO 228/1 threaded port
2	**Suction filter**	Stainless steel **AISI 304**
3	**Suction cover**	Stainless steel **AISI 304**
4	**Impeller**	Open type in technopolymer
5	**Motor sleeve**	Stainless steel **AISI 304**
6	**Motor cover**	**AISI 304** stainless steel for D 8-10-20 Cast iron with cataphoresis treatment for D 30
7	**Motor shaft**	Stainless steel **AISI 431**

8 Double shaft seal with interposed oil chamber

Water pump	Seal	Shaft	Location	Materials
D8, D10, D20	**MG1-14D SIC**	Ø 14 mm	Motor side	SiC / Graphite / NBR
			Pump side	SiC / SiC / NBR
D30	**ST1-14 SIC**	Ø 14 mm		Ceramic / SiC / NBR
	Shaft seal	Ø 16 x Ø 24 x H 5 mm		

9 Capacitor
(exclusive to single-phase models)

10 Electric motor

Dm: single-phase 230 V - 50 Hz with winding integrated thermal motor protection
D: three-phase 400 V - 50 Hz

– Insulation: class F
– Protection rating: IP X8

11 Power cord

Type 'H07 RN-F
(Schuko plug exclusive to single-phase models)
※ Standard length 5 metres (10 metres for D30)

12 Float switch (exclusive to single-phase models)

13 Tilting device for the float cable
(exclusive to single-phase models)
Patent No. IT0001428923

14 Power cable strain relief
Patent No. EP2313658

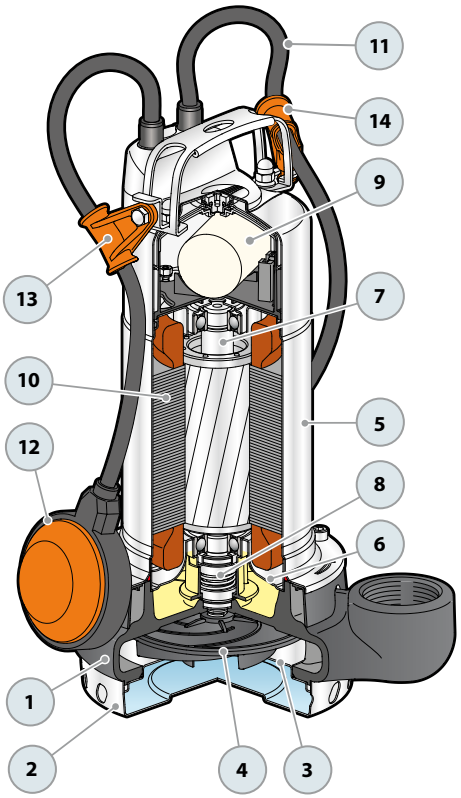

Dirty water | Domestic use | Civil use

PERFORMANCE RANGE

- Flow rate up to **400 l/min** (24 m^3/h)
- Head up to **13 m**

INSTALLATION AND USE

ZXm 2 pumps are designed for sewage drainage in **domestic and civil settings**.

※ Featuring a **VORTEX** impeller, these pumps efficiently handle solids up to **40 mm** in diameter, with a unique design that prevents clogging.

INCLUDES

※ **5 m** power cable
※ Float switch
※ Hose connector **Ø 50 mm**

APPLICATION LIMITS

- Maximum operating depth below water level up to **5 m** (with an appropriately sized power cable)
- Liquid temperature up to +40 **°C**
- Suspended solids transfer:
  - up to **Ø 30 mm** for ZXm 2/30
  - up to **Ø 40 mm** for ZXm 2/40
- **Minimum immersion for continuous service:**
  - 265 mm for ZXm 2/30
  - 275 mm for ZXm 2/40

AVAILABLE UPON REQUEST

※ Pumps with **10 m** power cable
※ Different voltage requirements 60 Hz frequency

PATENTS - TRADE MARKS - MODELS

- Patent No. EP2313658
- Patent No. IT0001428923

CURVES AND PERFORMANCE DATA

50 Hz

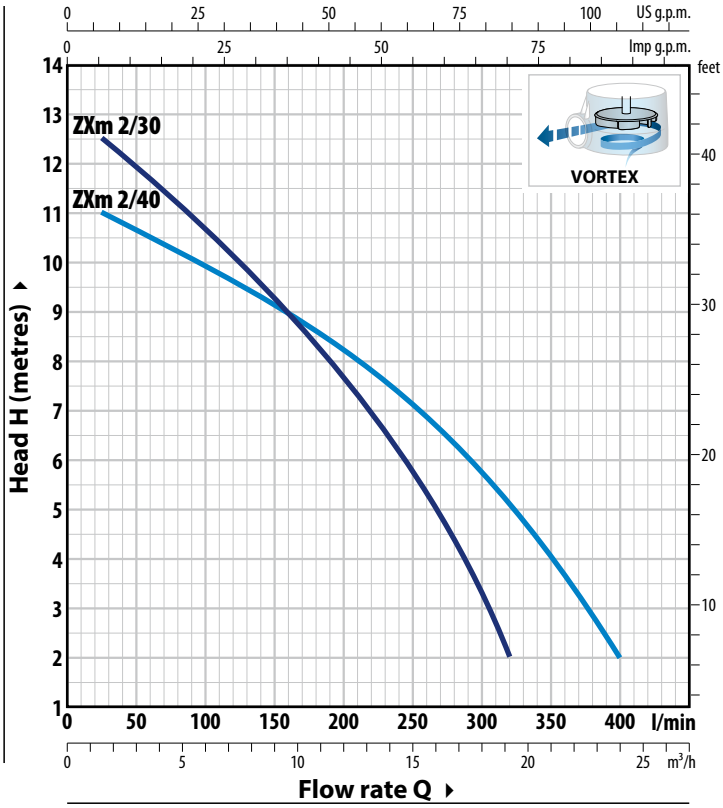

ABSORPTION

TYPE **Single-phase**	VOLTAGE **230 V**
ZXm 2/30	4.0 A
ZXm 2/40	4.0 A

TYPE	POWER (P2)		Q	m³/h	0	1.5	3	6	9	12	15	18	19.2	21	24
Single-phase	**kW**	**HP**		l/min	**0**	**25**	**50**	**100**	**150**	**200**	**250**	**300**	**320**	**350**	**400**
ZXm 2/30	0.55	0.75	**H** metres		13	12.5	11.8	10.6	9.3	7.6	5.8	3.3	2		
ZXm 2/40	0.55	0.75			11.5	11	10.6	9.8	9.2	8.2	7.2	5.7	5.2	4	2

Q = Flow rate **H** = Total manometric head

Performance curves comply with EN ISO 9906 Grade 3B tolerance limits.

MATERIALS AND COMPONENTS

1	**Pump body**	Fibreglass-filled technopolymer with ISO 228/1 threaded delivery port (5-year warranty)
2	**Base**	Glass-fibre reinforced technopolymer
3	**Impeller**	VORTEX type made of glass-fibre reinforced technopolymer
4	**Motor sleeve**	Stainless steel **AISI 304**
5	**Motor cover**	Stainless steel **AISI 304**
6	**Motor shaft**	Stainless steel **AISI 431**
7	**Double mechanical seal with interposed oil chamber**	

Seal	Shaft	Location	Materials
MG1-14D SIC	Ø 14 mm	Motor side	SiC / Graphite / NBR
		Pump side	SiC / SiC / NBR

8	**Capacitor**	
9	**Electric motor**	Single-phase 230 V - 50 Hz with winding integrated thermal motor protection - Insulation: class F - Protection rating: IP X8
10	**Power cord**	Type 'H07 RN-F' with Schuko plug ※ Standard length 5 metres
11	**Float switch**	
12	**Tilting device for the float cable**	Patent No. IT0001428923
13	**Power cable strain relief**	Patent No. EP2313658
14	**Hose connector Ø 50 mm (included in delivery)**	

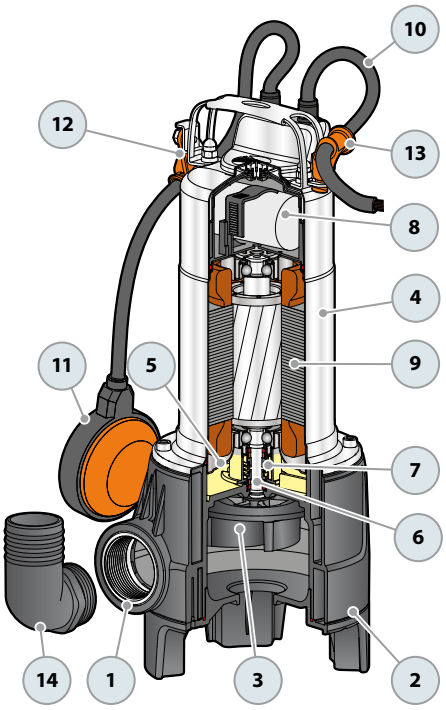

DIMENSIONS AND WEIGHT

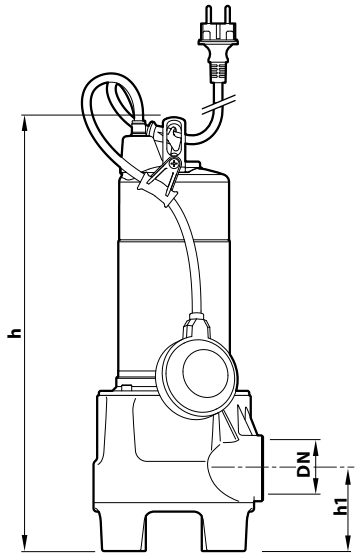

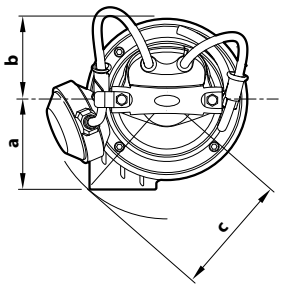

Typical installation

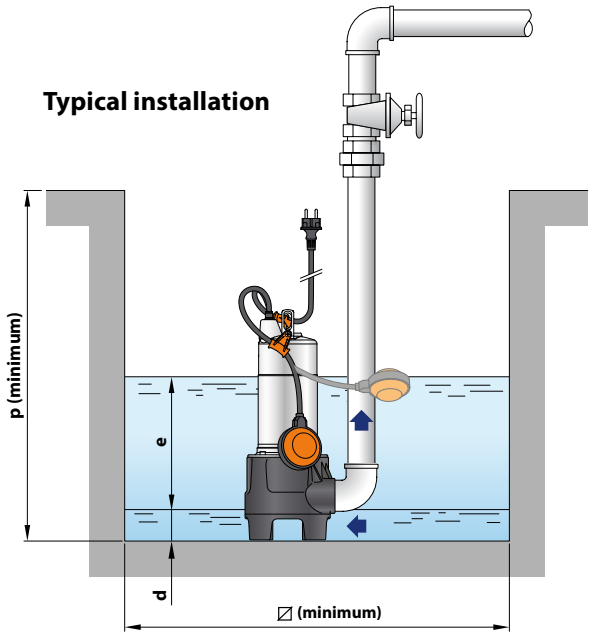

TYPE **Single-phase**	PORT DN	Passage of solid bodies	DIMENSIONS mm a	b	c	h	h1	d	e	p	⧄	kg 1~	PALLET CAPACITY
ZXm 2/30	**1½"**	**Ø 30 mm**	90	81	118	412	73	50	adjustable	500	500	10.8	54
ZXm 2/40		**Ø 40 mm**				422	83					10.8	54

Dirty water | Domestic use | Civil use

PERFORMANCE RANGE

- Flow rate up to **400 l/min** (24 m³/h)
- Head up to **13 m**

INSTALLATION AND USE

ZXm 2-GM pumps are recommended for drainage of **sewage** in the **domestic and civil** sectors, for the evacuation of dirty water even in **very small spaces (sumps of only 220 mm side)**.

※ The **VORTEX** impeller allows the pumping of solids with a diameter of up to **40 mm** and, thanks to its special geometry, guarantees safe operation against clogging.

INCLUDES

※ Adjustable vertical magnetic float switch
※ Hose connector **Ø 50 mm**
※ **5 m** power cable

APPLICATION LIMITS

- Depth below water level up to **5 m**(with an appropriately sized power cable)
- Liquid temperature up to **+40 °C**
- Suspended solids transfer:
  - up to **Ø 30 mm** for ZXm 2/30-GM
  - up to **Ø 40 mm** for ZXm 2/40-GM
- **Minimum immersion for continuous service:**
  - 265 mm for ZXm 2/30-GM
  - 275 mm for ZXm 2/40-GM

AVAILABLE UPON REQUEST

※ Pumps with **10 m** power cable
※ Different voltage requirements 60 Hz frequency

CURVES AND PERFORMANCE DATA 50 Hz

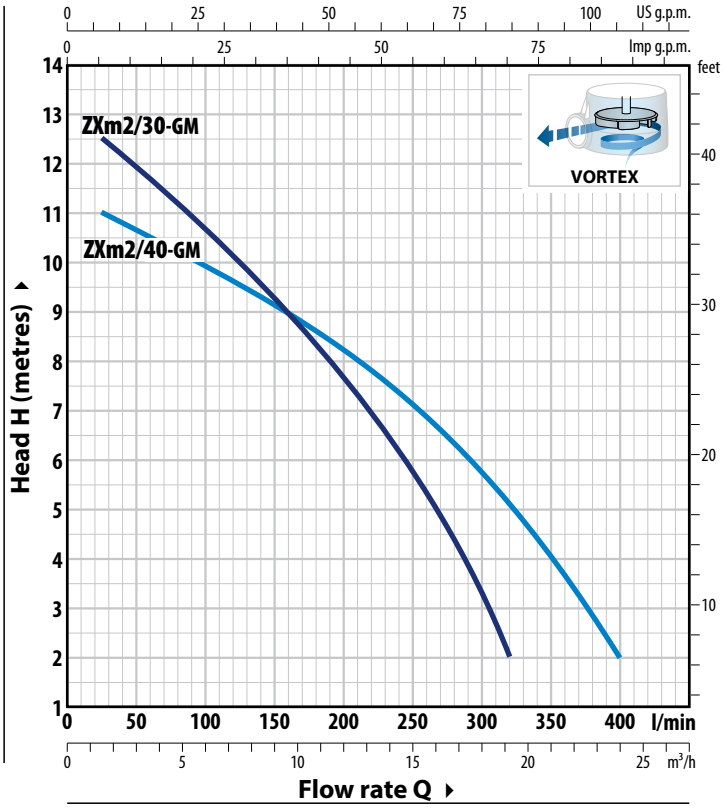

ABSORPTION

TYPE **Single-phase**	VOLTAGE **230 V**
ZXm 2/30-GM	4.0 A
ZXm 2/40-GM	4.0 A

TYPE	POWER (P2)		Q m³/h	0	1.5	3	6	9	12	15	18	19.2	21	24
Single-phase	**kW**	**HP**	Q l/min	**0**	**25**	**50**	**100**	**150**	**200**	**250**	**300**	**320**	**350**	**400**
ZXm 2/30-GM	0.55	0.75	**H** metres	13	12.5	11.8	10.6	9.3	7.6	5.8	3.3	2		
ZXm 2/40-GM	0.55	0.75		11.5	11	10.6	9.8	9.2	8.2	7.2	5.7	5.2	4	2

Q = Flow rate **H** = Total manometric head

Performance curves comply with EN ISO 9906 Grade 3B tolerance limits.

MATERIALS AND COMPONENTS

1	**Pump body**	Fibreglass-filled technopolymer with ISO 228/1 threaded delivery port (5-year warranty)
2	**Base**	Glass-fibre reinforced technopolymer
3	**Impeller**	VORTEX type made of glass-fibre reinforced technopolymer
4	**Motor sleeve**	Stainless steel **AISI 304**
5	**Motor cover**	Stainless steel **AISI 304**
6	**Motor shaft**	Stainless steel **AISI 431**

7 Double mechanical seal with interposed oil chamber

Seal	Shaft	Location	Materials
MG1-14D SIC	Ø 14 mm	Motor side	SiC / Graphite / NBR
		Pump side	SiC / SiC / NBR

8 Capacitor

9 Electric motor
Single-phase 230 V - 50 Hz with winding integrated thermal motor protection - Insulation: class F - Protection rating: IP X8

10 Power cord
Type 'H07 RN-F' with Schuko plug
※ Standard length 5 metres

11 Float level switch
Float magnetic vertical solids adjustable

12 Hose connector
Ø 50 mm (included in delivery)

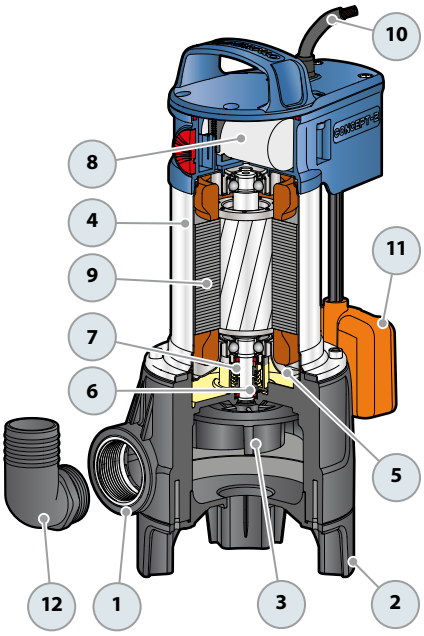

DIMENSIONS AND WEIGHT

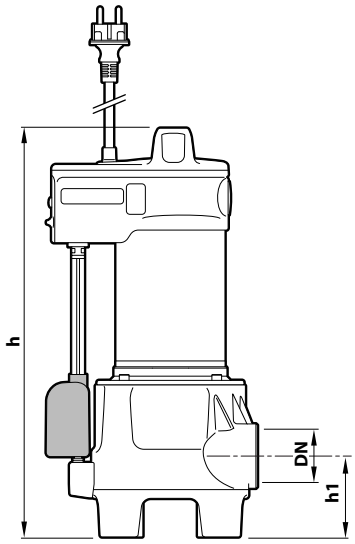

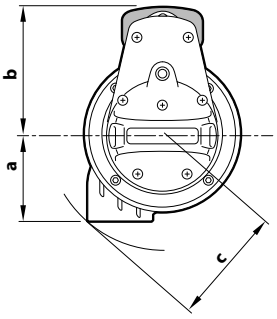

Typical installation

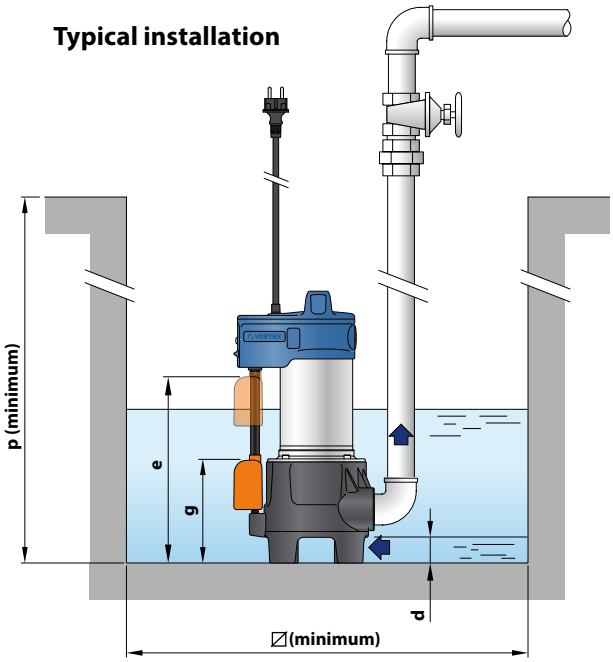

TYPE **Single-phase**	PORT DN	Passage of solid bodies	DIMENSIONS mm a	b	c	h	h1	d	g (adjustable)	e	p	⌀	kg 1~	PALLET CAPACITY
ZXm 2/30-GM	**1½"**	**Ø 30 mm**	90	127	118	394	73	50	130	260	450	300	10.6	54
ZXm 2/40-GM		**Ø 40 mm**				404	83		140	270			10.6	54

Dirty water Domestic use

PERFORMANCE RANGE

- Flow rate up to **250 l/min** (15 m³/h)
- Head up to **10 m**

INSTALLATION AND USE

The **FAMILY** pump is designed for **dirty water** and sewage drainage in **domestic settings**, capable of handling suspended solids up to **30 mm in diameter**. It's easy to operate and reliable in automated fixed installations.

INCLUDES

※ **5 m** power cable
※ Float switch
※ Rubber element holder

APPLICATION LIMITS

- Depth below water level up to **5 m** (with an appropriately sized power cable)
- Liquid temperature up to **+40 °C**
- Capable of processing suspended solids up to **Ø 30 mm**
- **Minimum immersion for continuous service: 160 mm**

AVAILABLE UPON REQUEST

※ Technopolymer impeller (economic)
※ Pumps with **10 m** power cable
※ Different voltage requirements 60 Hz frequency

PATENTS - TRADE MARKS - MODELS

- Patent No. IT0001428923

CURVES AND PERFORMANCE DATA 50 Hz

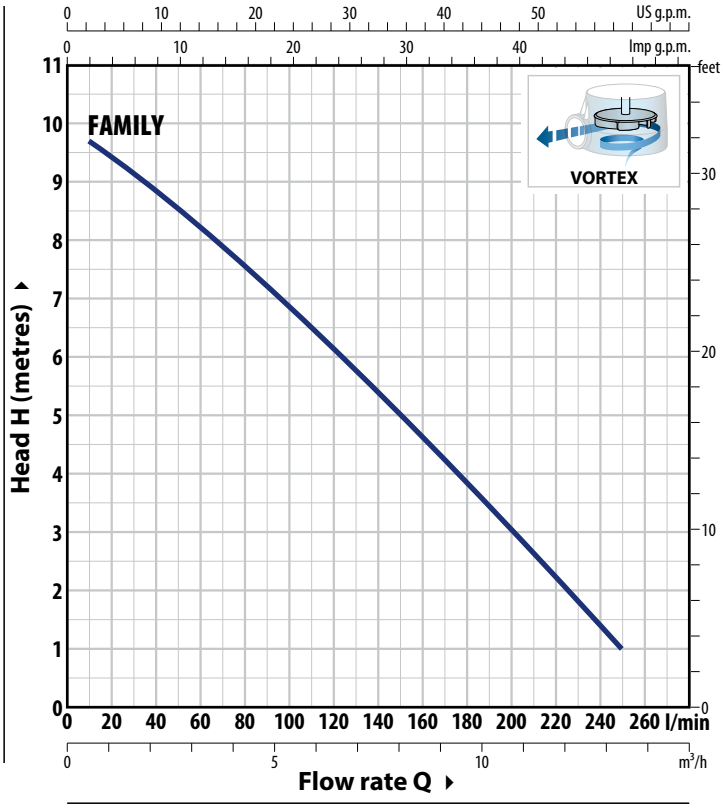

ABSORPTION

TYPE	VOLTAGE
Single-phase	**230 V**
FAMILY	3.0 A

TYPE Single-phase	POWER (P2) kW	HP	Q	m³/h	0	0.6	1.2	2.4	3.6	4.8	6	7.2	8.4	9.6	10.8	12	13.2	15
				l/min	**0**	**10**	**20**	**40**	**60**	**80**	**100**	**120**	**140**	**160**	**180**	**200**	**220**	**250**
FAMILY	0.50	0.70	**H** metres		10	9.7	9.4	9	8.2	7.6	7	6	5.4	4.6	3.7	3	2.2	1

Q = Flow rate **H** = Total manometric head

Performance curves comply with EN ISO 9906 Grade 3B tolerance limits.

MATERIALS AND COMPONENTS

1	**Pump body**	**AISI 304** stainless steel with ISO 228/1 threaded port
2	**Base**	Stainless steel **AISI 304**
3	**Impeller**	VORTEX type in **AISI 304** stainless steel
4	**Motor sleeve**	Stainless steel **AISI 304**
5	**Motor shaft**	Stainless steel **AISI 431**
6	**Double shaft seal**	
	Seal / Shaft / Materials	
	STA-12R / Ø 12 mm / Ceramic / Graphite /NBR	
	Shaft seal	Ø 12 x Ø 19 x H 5 mm
7	**Capacitor**	
8	**Electric motor**	
	Single-phase 230 V - 50 Hz with winding integrated thermal motor protection	
	- Insulation: class F - Protection rating: IP X8	
9	**Power cord**	
	Type 'H07 RN-F' with Schuko plug	
	※ Standard length 5 metres	
10	**Float switch**	
11	**Tilting device for the float cable**	
	Patent No. IT0001428923	
12	**Hose holder** (included in delivery)	
	Ø 50 mm	

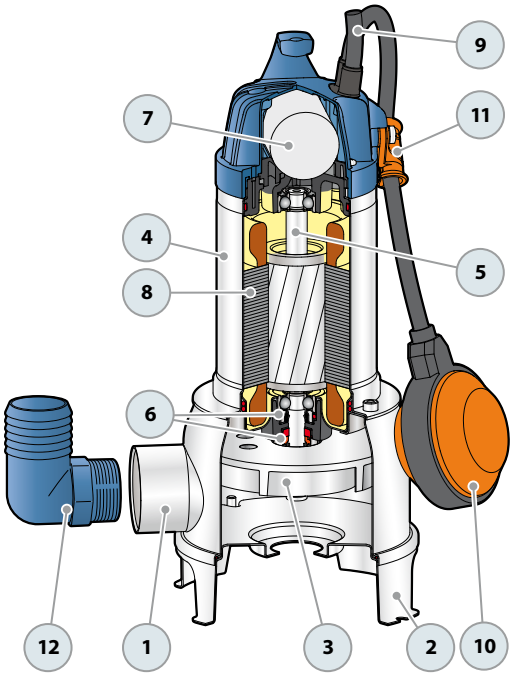

DIMENSIONS AND WEIGHT

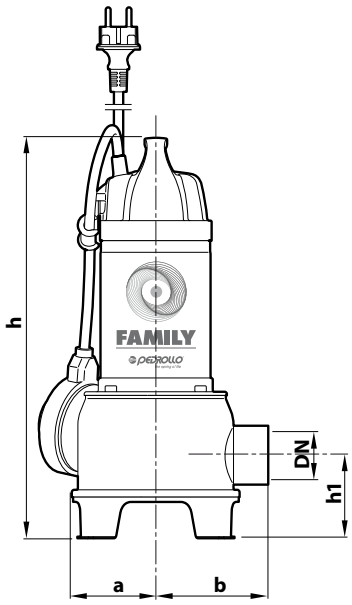

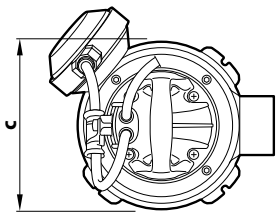

Typical installation

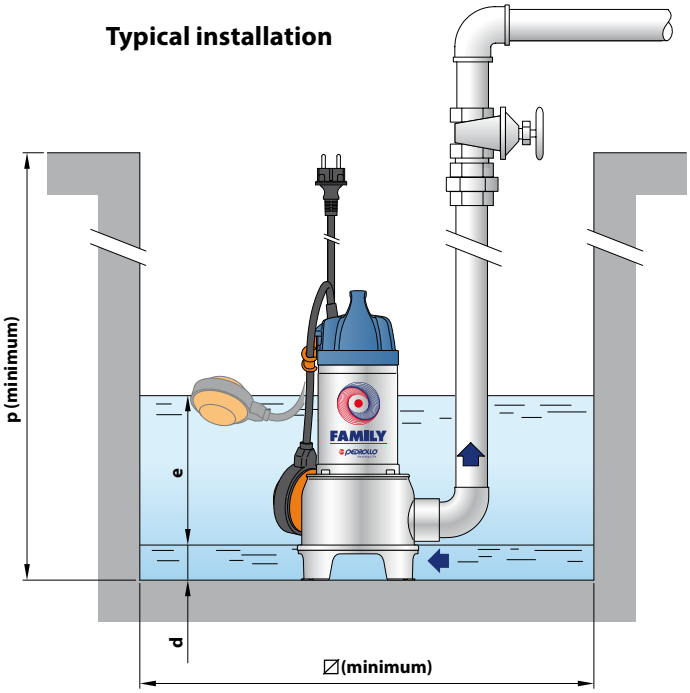

TYPE **Single-phase**	PORT DN	Passage of solid bodies	DIMENSIONS mm a	b	c	h	h1	d	e	p	⧄	kg 1~
FAMILY	**1½"**	**Ø 30 mm**	70	93	140	333	68	40	adjustable	450	450	7.0

PALLET CAPACITY
96

Dirty water Domestic use

PERFORMANCE RANGE

- Flow rate up to **400 l/min** (24 m³/h)
- Head up to **11 m**

INSTALLATION AND USE

ZXm 1 pump is designed for **dirty water** and sewage drainage in **domestic settings**, capable of handling suspened solids up to **40 mm in diameter**. It's easy to operate and reliable in automated fixed installations.

INCLUDES

※ **5 m** power cable
※ Float switch

APPLICATION LIMITS

- Depth below water level up to **5 m** (with an appropriately sized power cable)
- Liquid temperature up to **+40 °C**
- Capable of processing suspended solids up to **Ø 40 mm**
- Draining capability up to **50 mm** from the bottom
- **Minimum immersion for continuous service: 240 mm**

AVAILABLE UPON REQUEST

※ Pumps with **10 m** power cable.
※ Different voltage requirements 60 Hz frequency

CURVES AND PERFORMANCE DATA 50 Hz

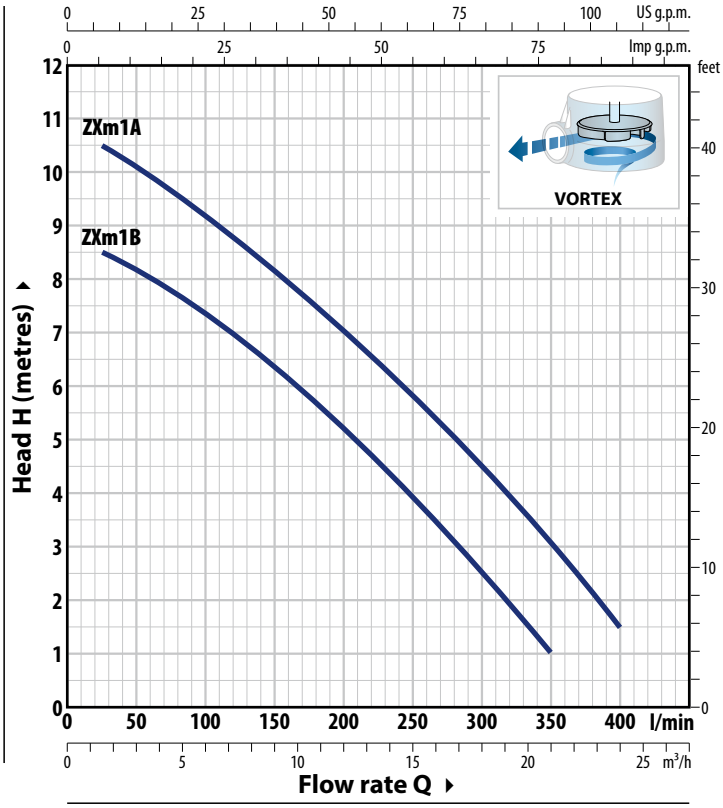

ABSORPTION

TYPE **Single-phase**	VOLTAGE **230 V**
ZXm 1B/40	3.3 A
ZXm 1A/40	4.5 A

TYPE Single-phase	POWER (P2) kW	HP	Q m³/h / l/min	0 / **0**	1.5 / **25**	3.0 / **50**	4.5 / **75**	6.0 / **100**	9.0 / **150**	12.0 / **200**	15.0 / **250**	18.0 / **300**	21.0 / **350**	24.0 / **400**
ZXm 1B/40	0.50	0.70	**H** metres	9	8.5	8.3	8	7.5	6.5	5.2	4	2.5	1	
ZXm 1A/40	0.60	0.85		11	10.5	10	9.5	9.2	8.2	7	5.7	4.3	2.8	1.5

Q = Flow rate **H** = Total manometric head

Performance curves comply with EN ISO 9906 Grade 3B tolerance limits.

MATERIALS AND COMPONENTS

1	**Pump body**	Cast iron with ISO 228/1 threaded port
2	**Base**	Stainless steel **AISI 304**
3	**Impeller**	VORTEX technopolymer type
4	**Outer sleeve**	Stainless steel **AISI 304**
5	**Motor sleeve**	Steel
6	**Motor shaft**	Stainless steel **AISI 431**
7	**Double shaft seal**	
	Seal / Shaft / Materials	
	STA-12R / Ø 12 mm / Ceramic / Graphite / NBR	
	Sealing ring	Ø 12 x Ø 22 x H 6 mm
8	**Capacitor**	
9	**Electric motor**	
	Single-phase 230 V - 50 Hz with winding integrated thermal motor protection – Insulation: class F – Protection rating: IP X8	
10	**Power cord**	
	Type 'H07 RN-F' with Schuko plug ※ Standard length 5 metres	
11	**Float switch**	
12	**Hose holder** (included in delivery) Ø 50 mm	

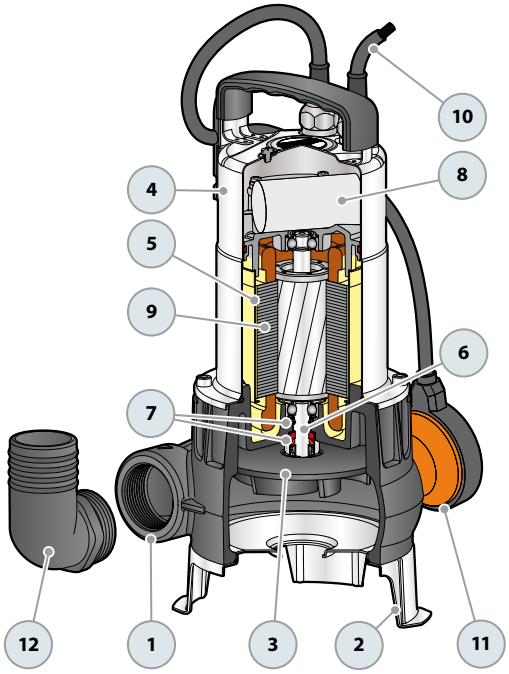

DIMENSIONS AND WEIGHT

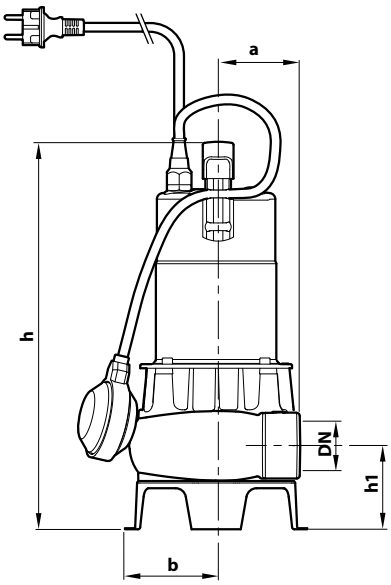

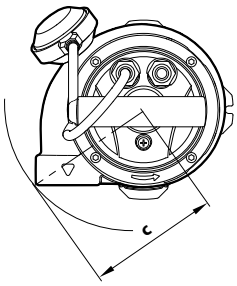

Typical installation

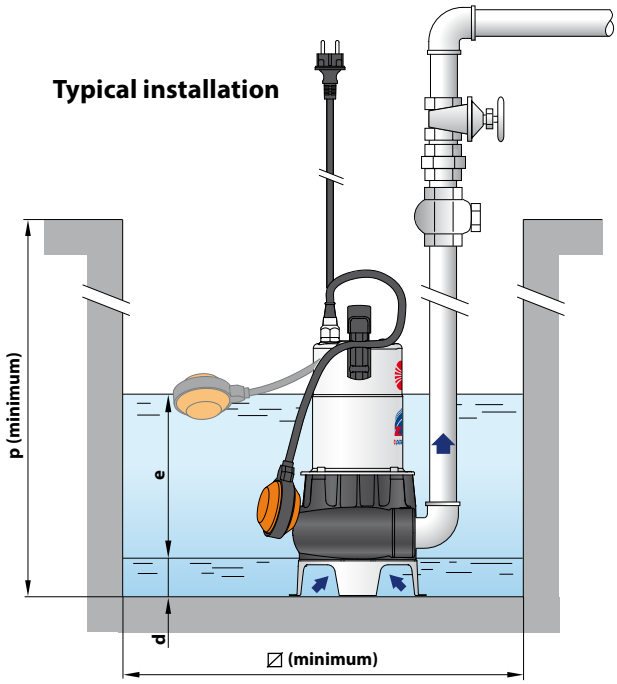

TYPE **Single-phase**	PORT **DN**	Passage of solid bodies	DIMENSIONS mm a	b	c	h	h1	d	e	p	⧄	kg 1~	PALLET CAPACITY
ZXm 1B/40	**1½"**	**Ø 40 mm**	75	89	130	378	82	50	adjustable	450	450	11.6	60
ZXm 1A/40												12.0	60

Sewage
Domestic use
Civil use
Industrial use

※ The Go-To Pump for Demanding Conditions and Performance Requirements

PERFORMANCE RANGE

- Flow rate up to **750 l/min** (45 m³/h)
- Head up to **15.5 m**

INSTALLATION AND USE

VX pumps are renowned for their reliability, especially in automated fixed installations.

Ideal for **domestic, civil, and industrial settings**, they efficiently handle suspended solids up to 50 mm in diameter, including in **groundwater**, **surface water, and sewage.**

They are also perfect for pumping out flooded areas like basements, underground parking garages, car wash stations, and emptying septic tanks and sewage systems.

※ The VORTEX impeller can handle solids up to **50 mm** in diameter. Its unique design ensures safe operation against clogging.

INCLUDES

※ Power cable length:
- **5 m** for VX 8 and VX 10
- **10 m** for VX 15 and VX 20

※ Float switch (exclusive to single-phase models)

APPLICATION LIMITS

- Depth below water level up to **5 m** (with an appropriately sized power cable)
- Liquid temperature up to **+40 °C**
- Suspended solids transfer:
  - up to **Ø 40 mm** for VX /35
  - up to **Ø 50 mm** for VX /50
- **Minimum immersion for continuous service:**
  - 290 mm for VX 8 and VX 10
  - 330 mm for VX 15
  - 360 mm for VX 20

AVAILABLE UPON REQUEST

※ Pumps with **10 m** power cable for VX 8 and VX 10
※ Different voltage requirements 60 Hz frequency

PATENTS - TRADE MARKS - MODELS

- Patent No. EP2313658
- Patent No. IT0001428923

CURVES AND PERFORMANCE DATA

50 Hz

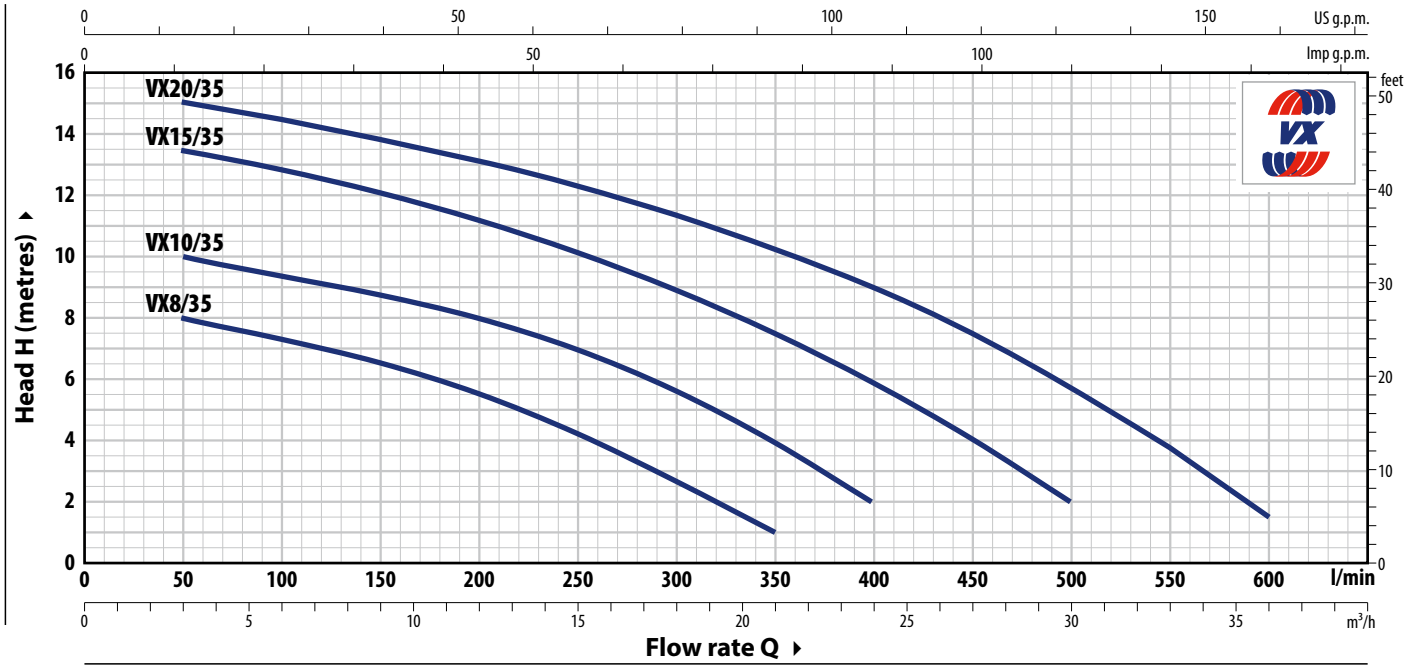

TYPE		POWER (P2)		Q m³/h	0	3	6	12	18	21	24	27	30	33	36
Single-phase	**Three-phase**	**kW**	**HP**	Q l/min	**0**	**50**	**100**	**200**	**300**	**350**	**400**	**450**	**500**	**550**	**600**
VXm 8/35	**VX 8/35**	0.55	0.75	H metres	9	8	7.5	5.5	2.7	1					
VXm 10/35	**VX 10/35**	0.75	1		11	10	9.5	8	5.7	4	2				
VXm 15/35	**VX 15/35**	1.1	1.5		14	13.5	12.8	11.2	9	7.7	6	4	2		
VXm 20/35	**VX 20/35**	1.5	2		15.5	15	14.5	13	11.5	10.3	9	7.5	5.8	3.8	1.5

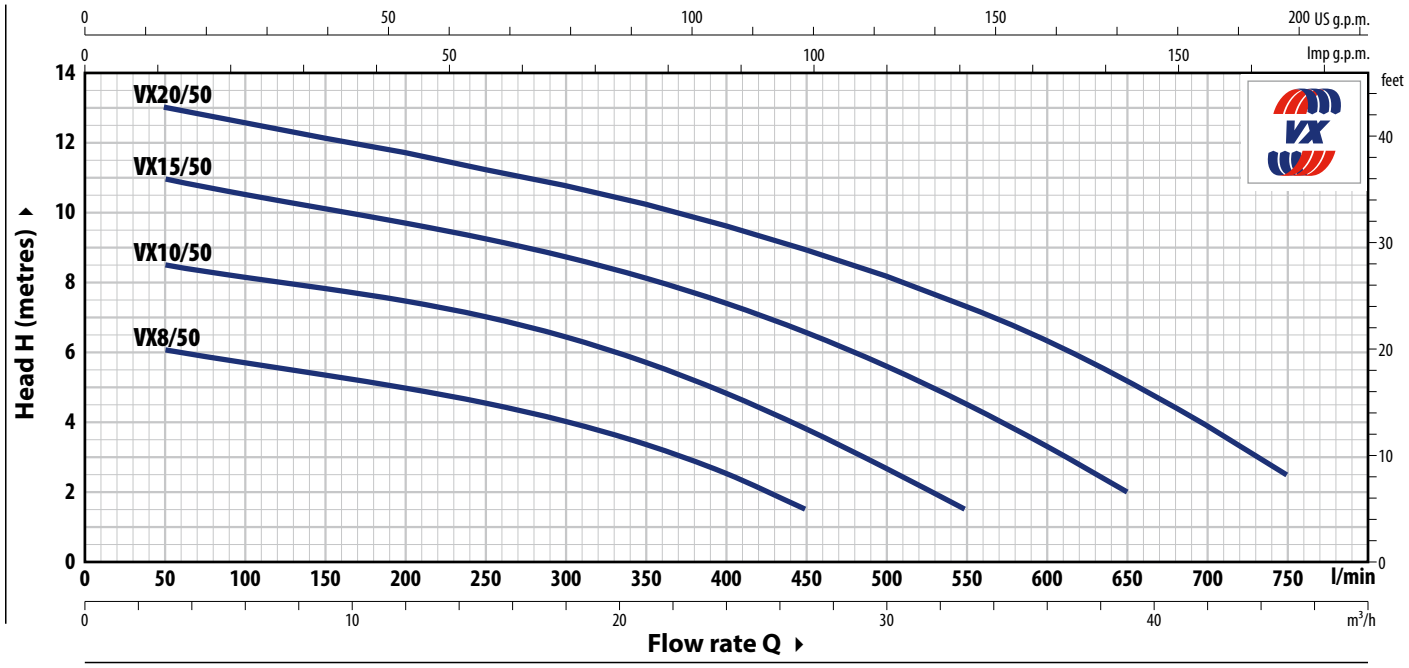

TYPE		POWER (P2)		Q m³/h	0	3	6	12	18	24	27	30	33	36	39	45
Single-phase	**Three-phase**	**kW**	**HP**	Q l/min	**0**	**50**	**100**	**200**	**300**	**400**	**450**	**500**	**550**	**600**	**650**	**750**
VXm 8/50	**VX 8/50**	0.55	0.75	H metres	6.5	6	5.8	5	4	2.5	1.5					
VXm 10/50	**VX 10/50**	0.75	1		9	8.5	8.2	7.5	6.5	5	3.8	2.5	1.5			
VXm 15/50	**VX 15/50**	1.1	1.5		11.5	11	10.5	9.8	8.7	7.5	6.5	5.5	4.5	3.5	2	
VXm 20/50	**VX 20/50**	1.5	2		13.5	13	12.5	11.5	10.7	9.5	9	8	7.5	6.5	5	2.5

Q = Flow rate **H** = Total manometric head

Performance curves comply with EN ISO 9906 Grade 3B tolerance limits.

ABSORPTION

TYPE **Single-phase**	VOLTAGE **230 V**
VXm 8/35	4.3 A
VXm 10/35	5.5 A
VXm 15/35	7.0 A
VXm 20/35	9.6 A
VXm 8/50	4.3 A
VXm 10/50	5.5 A
VXm 15/50	7.0 A
VXm 20/50	9.6 A

TYPE **Three-phase**	VOLTAGE **400 V**
VX 8/35	1.6 A
VX 10/35	2.2 A
VX 15/35	2.7 A
VX 20/35	3.7 A
VX 8/50	1.6 A
VX 10/50	2.2 A
VX 15/50	2.7 A
VX 20/50	3.7 A

DIMENSIONS AND WEIGHT

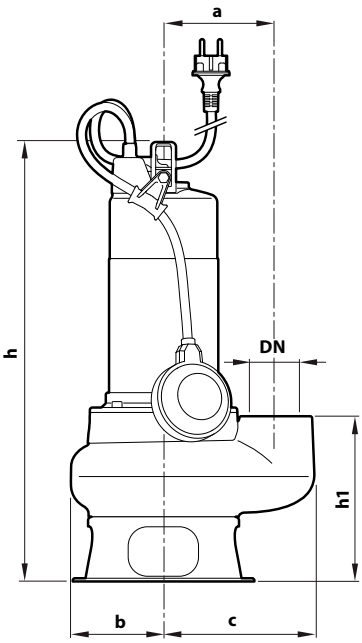

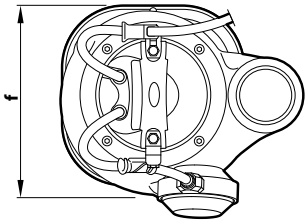

Typical installation

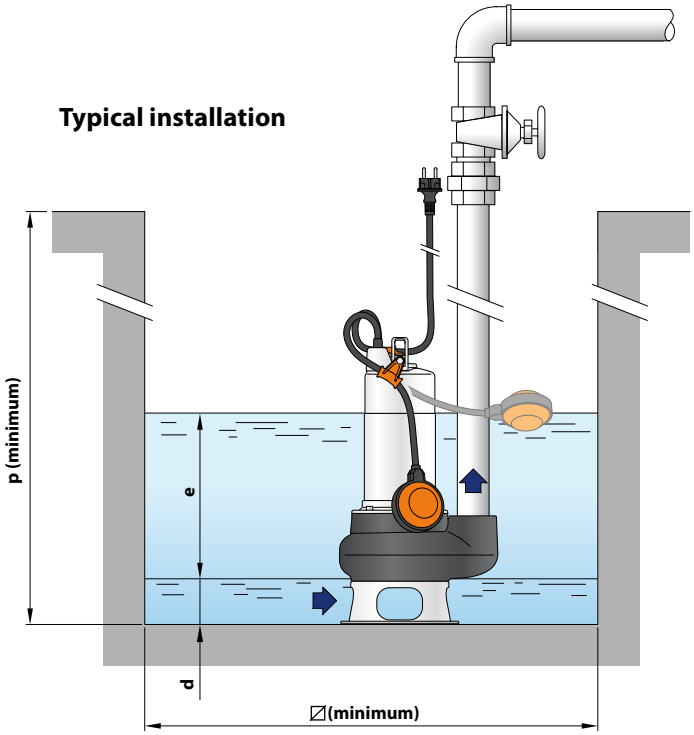

TYPE **Single-phase**	**Three-phase**	PORT **DN**	Passage of solid bodies	DIMENSIONS mm a	b	c	f	h	h1	d	e	p	∅	kg 1~	3~
VXm 8/35	**VX 8/35**	**1½"**	**Ø 40 mm**	115	95	148	200	425	158	55	adjustable	500	500	13.7	12.6
VXm 10/35	**VX 10/35**							440						15.2	14.0
VXm 15/35	**VX 15/35**							473						18.0	16.4
VXm 20/35	**VX 20/35**							503						20.2	18.0
VXm 8/50	**VX 8/50**	**2"**	**Ø 50 mm**	115	95	155	200	436	169	60				14.2	13.1
VXm 10/50	**VX 10/50**							451						15.7	14.5
VXm 15/50	**VX 15/50**							484						18.5	16.9
VXm 20/50	**VX 20/50**							514						20.7	18.5

PALLET CAPACITY

TYPE **Single-phase**	**Three-phase**	NO. OF PUMPS
VXm 8/35	**VX 8/35**	45
VXm 10/35	**VX 10/35**	45
VXm 15/35	**VX 15/35**	30
VXm 20/35	**VX 20/35**	30
VXm 8/50	**VX 8/50**	45
VXm 10/50	**VX 10/50**	45
VXm 15/50	**VX 15/50**	30
VXm 20/50	**VX 20/50**	30

MATERIALS AND COMPONENTS

1	**Pump body**	Cast iron with cataphoresis treatment for greater corrosion resistance with ISO 228/1 threaded port
2	**Base**	Stainless steel **AISI 304**
3	**Impeller**	VORTEX type in **AISI 304** stainless steel.
4	**Motor sleeve**	Stainless steel **AISI 304**
5	**Motor cover**	**AISI 304** stainless steel for VX 8-10 Cast iron with cataphoresis treatment for VX 15-20
6	**Motor shaft**	Stainless steel **AISI 431**

7 Double mechanical seal in oil chamber

Seal	Shaft	Location	Materials
MG1-14D SIC	Ø 14 mm	Motor side	Silicon carbide / Graphite / NBR
		Pump side	Silicon carbide/Silicon carbide/NBR

8 Capacitor (exclusive to single-phase models)

9 Electric motor

VXm: single-phase 230 V - 50 Hz with winding integrated thermal motor protection
VX: three-phase 400 V - 50 Hz

– Insulation: class F
– Protection rating: IP X8

10 Power cord

Power cable encapsulated with epoxy resin both in the grommet area and where the conductors exit the sheath, for absolute insulation against moisture and water.

Type 'H07 RN-F
(Schuko plug exclusive to single-phase models)
※ Standard length 5 metres (10 metres for VX 15 and VX 20)

11 Float switch (exclusive to single-phase models)

12 Tilting device for the float cable
(exclusive to single-phase models)
Patent No. IT0001428923

13 Power cable strain relief
Patent No. EP2313658

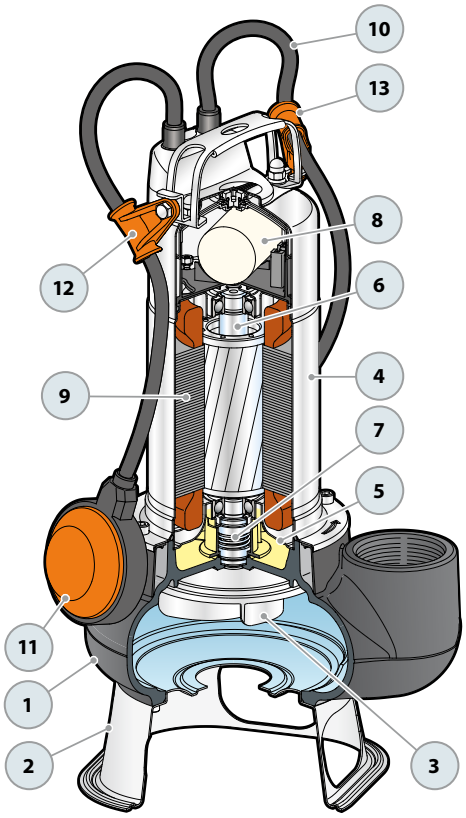

Sewage
Domestic use
Civil use
Industrial use

※ BC: The Ultimate Pump for Demanding Conditions and Maximum Performance

PERFORMANCE RANGE

- Flow rate up to **850 l/min** (51 m^3/h)
- Head up to **17 m**

INSTALLATION AND USE

BC submersible pumps are designed to drain **dirty and sewage water** in **domestic, civil, and industrial settings**. Featuring a **TWO-CHANNEL** stainless steel impeller, they can efficiently pump liquids containing suspended solids up to **50 mm in diameter** with short fibers and handle wastewater, sewage, surface water, and sludge-mixed water in residential properties.

※ The **TWO-CHANNEL** impeller provides excellent performance and high energy efficiency, generating increased pressure for pumping solids up to **50 mm in diameter**, making it the best choice for wastewater drainage.

INCLUDES

※ Power cable length:
- **5 m** for BC 10
- **10 m** for BC 15 and BC 20

※ Float switch (exclusive to single-phase models)

APPLICATION LIMITS

- Depth below water level up to **5 m** (with an appropriately sized power cable)
- Liquid temperature up to **+40 °C**
- Capable of processing suspended solids up to **Ø 50 mm**
- **Minimum immersion for continuous service:**
  - **290 mm for BC 10/50**
  - **330 mm for BC 15/50**
  - **360 mm for BC 20/50**

AVAILABLE UPON REQUEST

※ Pumps with **10 m** power cable for BC 10
※ Different voltage requirements 60 Hz frequency

PATENTS - TRADE MARKS - MODELS

- Patent No. EP2313658
- Patent No. IT0001428923

CURVES AND PERFORMANCE DATA

50 Hz

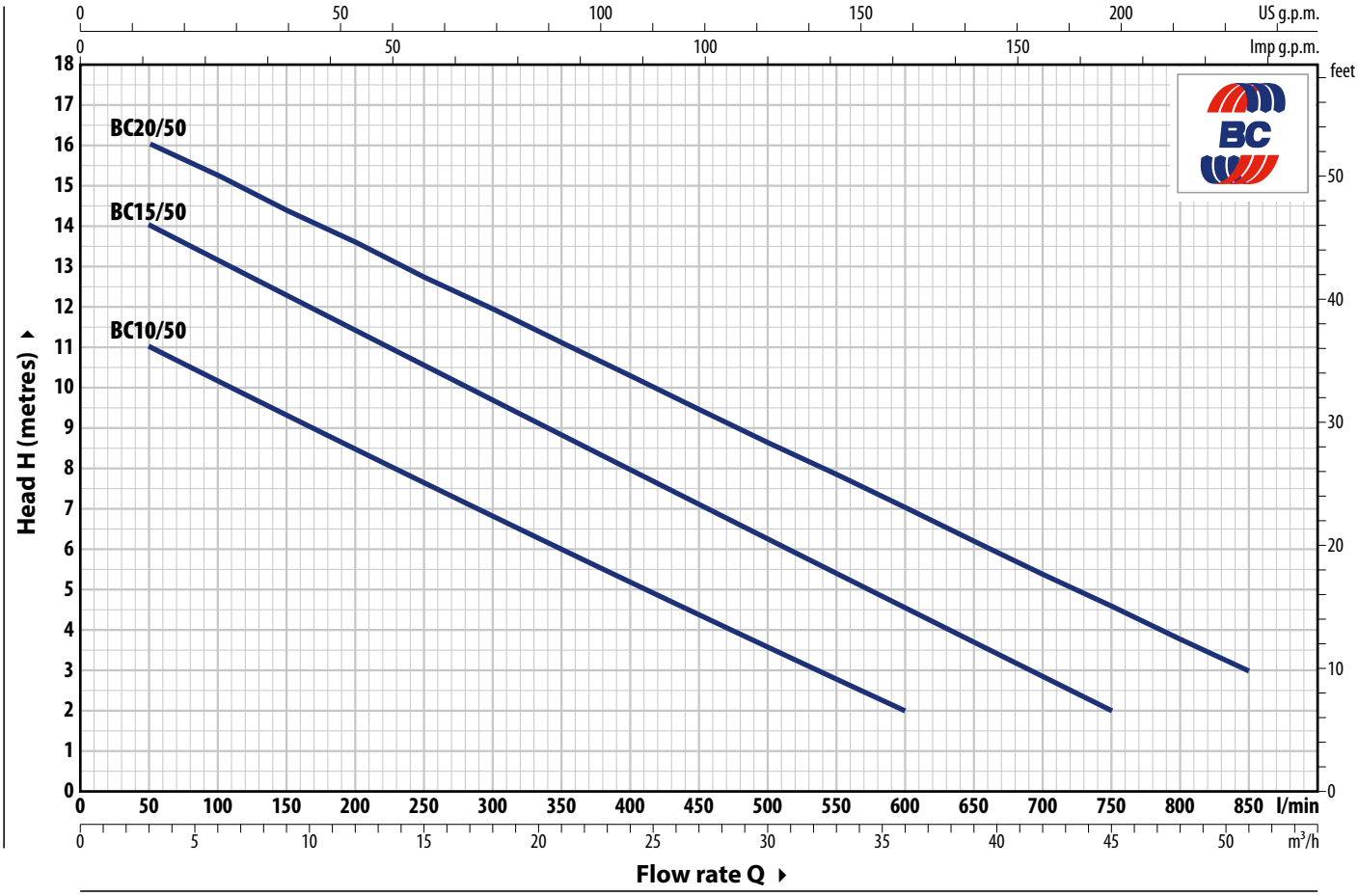

TYPE		POWER (P2)		Q m³/h	0	3	6	12	18	24	30	36	42	45	51
Single-phase	**Three-phase**	**kW**	**HP**	l/min	**0**	**50**	**100**	**200**	**300**	**400**	**500**	**600**	**700**	**750**	**850**
BCm 10/50	**BC 10/50**	0.75	1		12	11	10	8.5	7	5	3.6	2			
BCm 15/50	**BC 15/50**	1.1	1.5	**H** metres	15	14	13	11.5	9.7	8	6.3	4.6	3	2	
BCm 20/50	**BC 20/50**	1.5	2		17	16	15.3	13.5	12	10.3	8.6	7.0	5.3	4.5	3

Q = Flow rate **H** = Total manometric head

Performance curves comply with EN ISO 9906 Grade 3B tolerance limits.

ABSORPTION

TYPE **Single-phase**	VOLTAGE **230 V**
BCm 10/50	5.5 A
BCm 15/50	8.0 A
BCm 20/50	10.0 A

TYPE **Three-phase**	VOLTAGE **400 V**
BC 10/50	2.2 A
BC 15/50	3.1 A
BC 20/50	3.9 A

DIMENSIONS AND WEIGHT

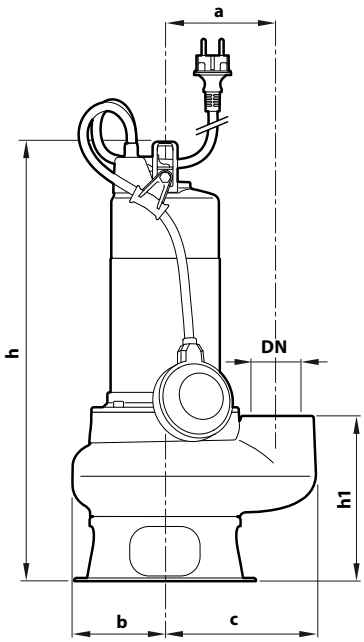

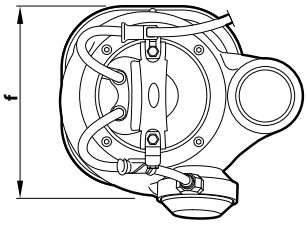

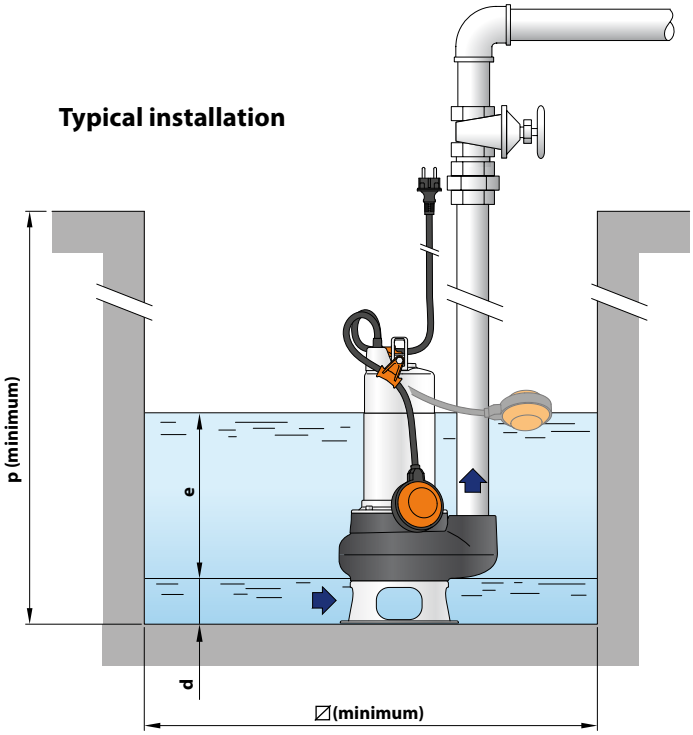

TYPE		PORT	Passage of solid bodies	DIMENSIONS mm										kg	
Single-phase	**Three-phase**	**DN**		a	b	c	f	h	h1	d	e	p	⧄	1~	3~
BCm 10/50	**BC 10/50**							451						16.2	15.0
BCm 15/50	**BC 15/50**	**2"**	**Ø 50 mm**	115	95	155	200	484	169	60	adjustable	500	500	18.8	17.2
BCm 20/50	**BC 20/50**							514						21.0	18.8

PALLET CAPACITY

TYPE		NO. OF PUMPS
Single-phase	**Three-phase**	
BCm 10/50	**BC 10/50**	45
BCm 15/50	**BC 15/50**	30
BCm 20/50	**BC 20/50**	30

MATERIALS AND COMPONENTS

1	**Pump body**	Cast iron with cataphoresis treatment for greater corrosion resistance with ISO 228/1 threaded port
2	**Base**	Stainless steel **AISI 304**
3	**Impeller**	TWO-CHANNEL type in micro-cast **AISI 304** stainless steel.
4	**Motor sleeve**	Stainless steel **AISI 304**
5	**Motor cover**	**AISI 304** stainless steel for BC 10/50 Cast iron with cataphoresis treatment for BC 15/50, BC 20/50
6	**Motor shaft**	Stainless steel **AISI 431**

7 Double mechanical seal in oil chamber

Seal	Shaft	Location	Materials
MG1-14D SIC	Ø 14 mm	Motor side	Silicon carbide / Graphite / NBR
		Pump side	Silicon carbide/Silicon carbide/NBR

8 Capacitor (exclusive to single-phase models)

9 Electric motor

BCm: single-phase 230 V - 50 Hz with winding integrated thermal motor protection
BC: three-phase 400 V - 50 Hz
– Insulation: class F
– Protection rating: IP X8

10 Power cord

Power cable encapsulated with epoxy resin both in the grommet area and where the conductors exit the sheath, for absolute insulation against moisture and water.

Type 'H07 RN-F
(Schuko plug exclusive to single-phase models)
※ Standard length 5 metres (10 metres for BC 15 and BC 20)

11 Float switch (exclusive to single-phase models)

12 Tilting device for the float cable
(exclusive to single-phase models)
Patent No. IT0001428923

13 Power cable strain relief
Patent No. EP2313658

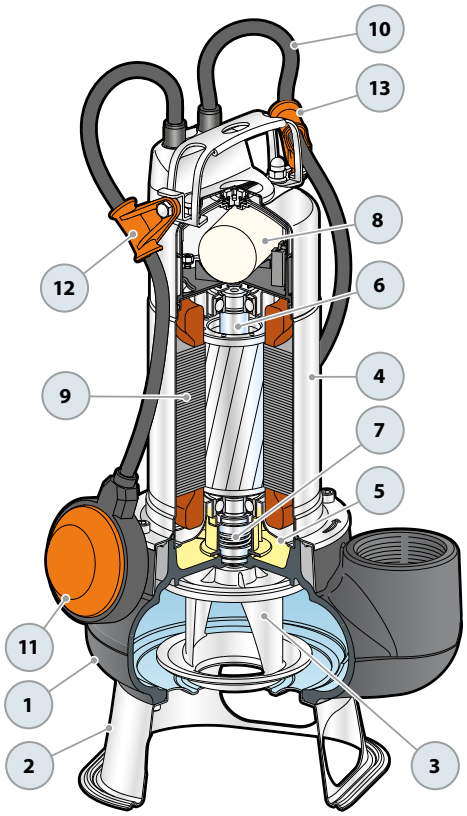

Sewage

Domestic use

Civil use

※ **High-quality materials and robust construction ensure superior performance and reliability**

PERFORMANCE RANGE

- Flow rate up to **650 l/min** (39 m³/h)
- Head up to **14 m**

INSTALLATION AND USE

The **VXC** series features **VORTEX**-type impellers, offering robust and reliable performance for demanding applications. Constructed from thick cast iron, these pumps are exceptionally strong and resistant to abrasion, ensuring continuous operation.

They are perfectly suited for draining **dirty water with suspended solids and sewage, wastewater, and sludge mixtures**.

INCLUDES

※ Power cable length **10 m**
※ Float switch (exclusive to single-phase models)

APPLICATION LIMITS

- Depth below water level up to **10 m** (with an appropriately sized power cable)
- Liquid temperature up to **+40 °C**
- Suspended solids transfer:
  – up to **Ø 40 mm** for VXC /35
  – up to **Ø 50 mm** for VXC /45
- **Minimum immersion for continuous service 305 mm**

AVAILABLE UPON REQUEST

※ Different voltage requirements 60 Hz frequency

PATENTS - TRADE MARKS - MODELS

- Patent No. IT0001428923
- Registered Community Model No. 002501486-0003

CURVES AND PERFORMANCE DATA

50 Hz

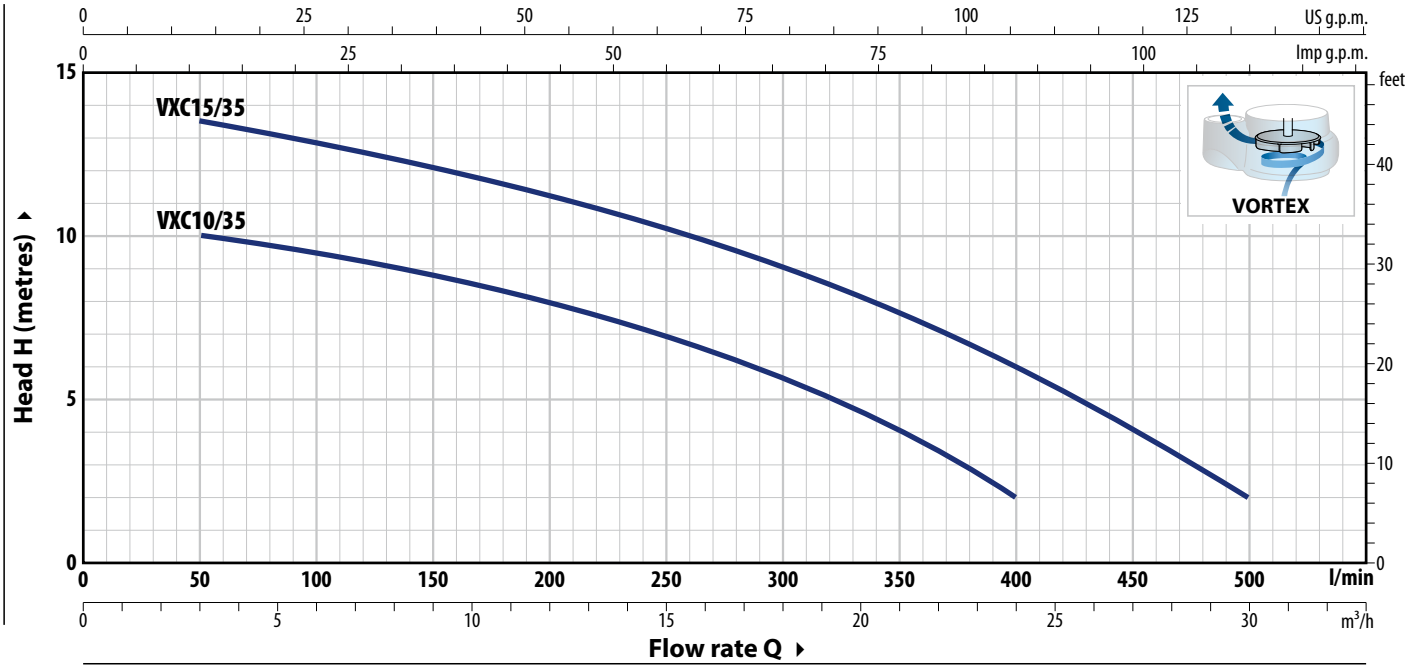

TYPE		POWER (P2)		Q m³/h	0	3	6	12	18	21	24	27	30
Single-phase	**Three-phase**	**kW**	**HP**	Q l/min	**0**	**50**	**100**	**200**	**300**	**350**	**400**	**450**	**500**
VXCm 10/35	**VXC 10/35**	0.75	1	H metres	11	10	9.5	8	5.7	4	2		
VXCm 15/35	**VXC 15/35**	1.1	1.5		14	13.5	12.8	11.2	9	7.7	6	4	2

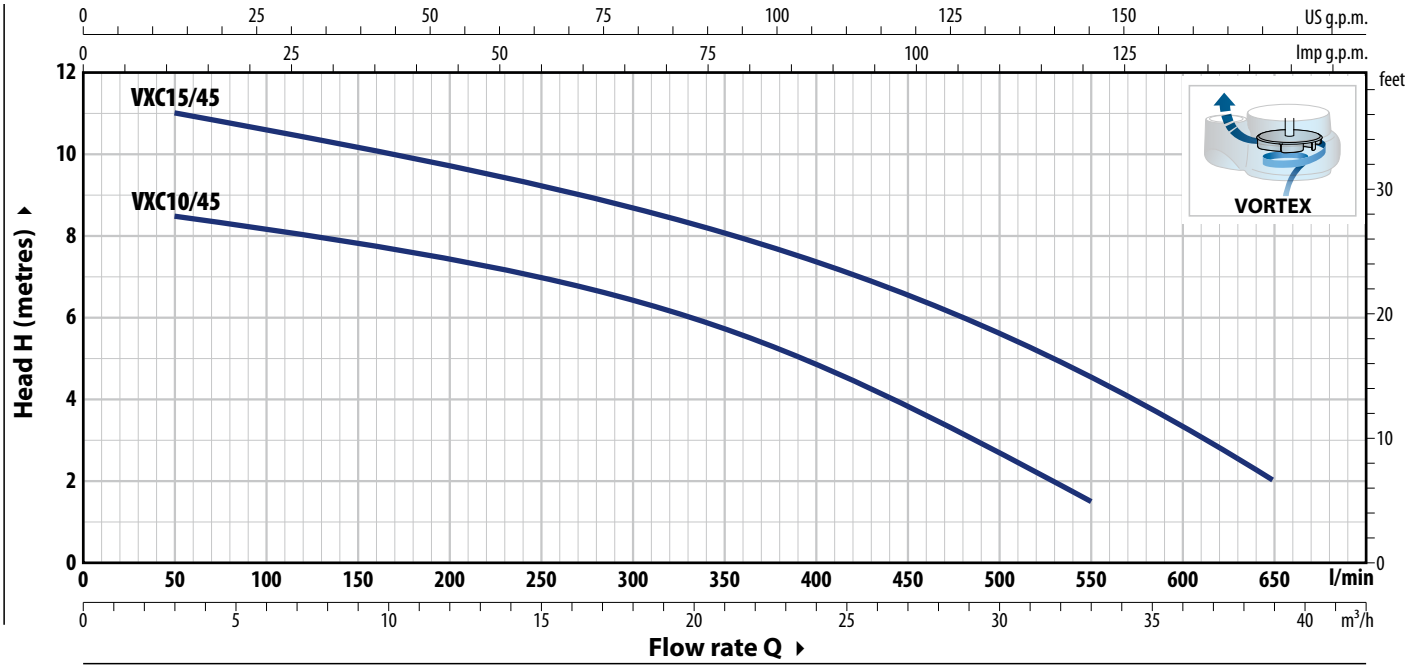

TYPE		POWER (P2)		Q m³/h	0	3	6	12	18	24	27	30	33	36	39
Single-phase	**Three-phase**	**kW**	**HP**	Q l/min	**0**	**50**	**100**	**200**	**300**	**400**	**450**	**500**	**550**	**600**	**650**
VXCm 10/45	**VXC 10/45**	0.75	1	H metres	9	8.5	8.2	7.5	6.5	5	3.8	2.5	1.5		
VXCm 15/45	**VXC 15/45**	1.1	1.5		11.5	11	10.5	9.8	8.7	7.5	6.5	5.5	4.5	3.5	2

Q = Flow rate **H** = Total manometric head

Performance curves comply with EN ISO 9906 Grade 3B tolerance limits.

ABSORPTION

TYPE **Single-phase**	VOLTAGE **230 V**
VXCm 10/35	5.5 A
VXCm 15/35	7.4 A
VXCm 10/45	5.5 A
VXCm 15/45	7.4 A

TYPE **Three-phase**	VOLTAGE **400 V**
VXC 10/35	2.2 A
VXC 15/35	3.0 A
VXC 10/45	2.2 A
VXC 15/45	3.0 A

DIMENSIONS AND WEIGHT

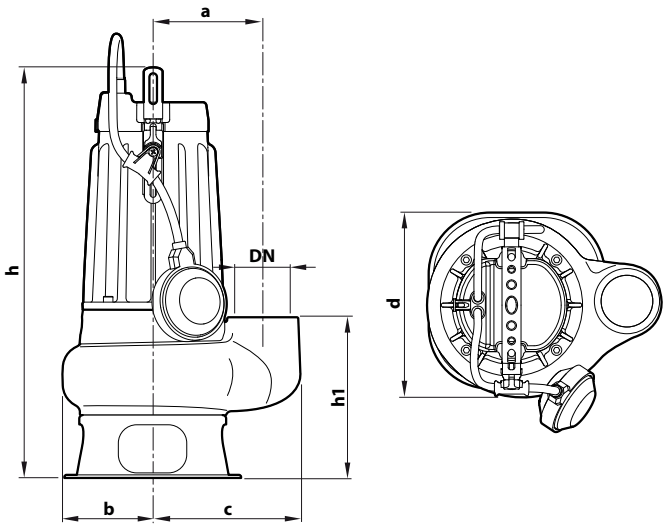

Typical installation

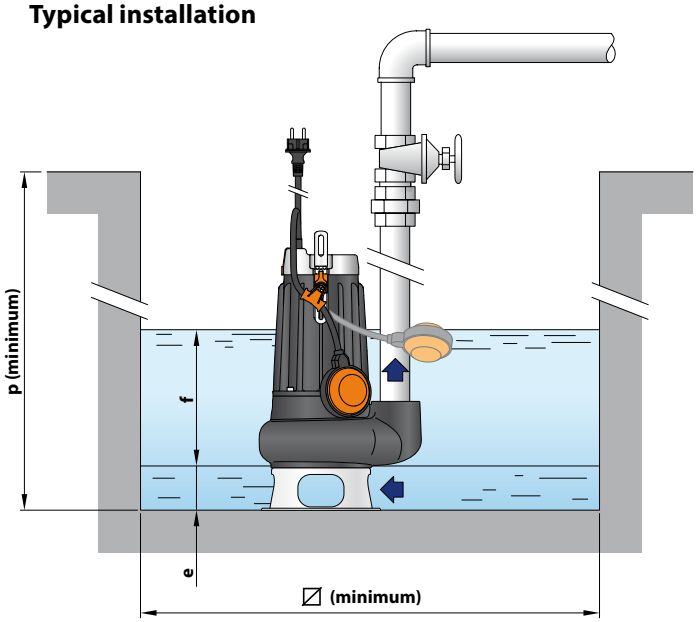

TYPE		PORT	Passage of solid bodies	DIMENSIONS mm										kg	
Single-phase	**Three-phase**	**DN**		a	b	c	d	h	h1	e	f	p	∅	1~	3~
VXCm 10/35	**VXC 10/35**	**1½"**	**Ø 40 mm**	115	95	148	200	421	158	55	adjustable	500	500	19.6	18.2
VXCm 15/35	**VXC 15/35**													19.7	18.3
VXCm 10/45	**VXC 10/45**	**2"**	**Ø 50 mm**			155		434	169	60				20.1	19.0
VXCm 15/45	**VXC 15/45**													20.2	19.1

PALLET CAPACITY

TYPE **Three-phase**	NO. OF PUMPS
VXC 10/35	45
VXC 15/35	45
VXC 10/45	45
VXC 15/45	45

MATERIALS AND COMPONENTS

1	**Pump body**	Cast iron with cataphoresis treatment for greater corrosion resistance with ISO 228/1 threaded port
2	**Base**	Stainless steel **AISI 304**
3	**Impeller**	VORTEX type in **AISI 304** stainless steel
4	**Motor holder**	Cast iron with cataphoresis treatment
5	**Motor cover**	Stainless steel **AISI 304**
6	**Motor shaft**	Stainless steel **AISI 431**

7 Double mechanical seal with interposed oil chamber

Seal	Shaft	Location	Materials
MG1-14D SIC	Ø 14 mm	Motor side	Silicon carbide / Graphite / NBR
		Pump side	Silicon carbide/Silicon carbide/NBR

8 Electric motor

VXCm: single-phase 230 V - 50 Hz
with winding integrated thermal motor protection
VXC: three-phase 400 V - 50Hz
– Insulation: class F
– Protection rating: IP X8

9 Power cord

Type 'H07 RN-F
(Schuko plug exclusive to single-phase models)

※ Standard length 10 metres

10 Float switch
(exclusive to single-phase models)

11 Tilting device for the float cable
(exclusive to single-phase models)
Patent No. IT0001428923

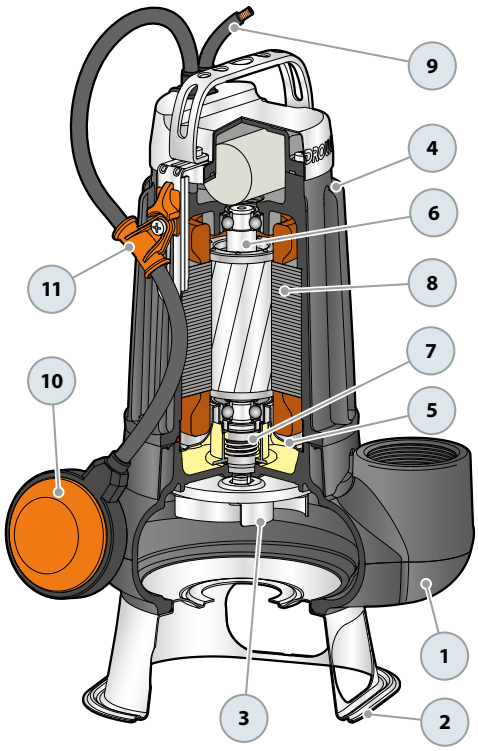

Sewage Domestic use Civil use

PERFORMANCE RANGE

- Flow rate up to **750 l/min** (45 m³/h)
- Head up to **15 m**

INSTALLATION AND USE

The **MC** series features **TWO-CHANNEL** impellers, offering **robust** and reliable performance for demanding applications. Constructed from thick cast iron, these pumps are exceptionally strong and resistant to abrasion, ensuring continuous operation.
They are perfectly suited for draining **dirty water with suspended solids, and sewage.**

INCLUDES

※ Power cable length **10 m**
※ Float switch (exclusive to single-phase models)

APPLICATION LIMITS

- Depth below water level up to **10 m** (with an appropriately sized power cable)
- Liquid temperature up to **+40 °C**
- Capable of processing suspended solids up to **Ø 50 mm**
- **Minimum immersion for continuous service: 305 mm**

AVAILABLE UPON REQUEST

※ Different voltage requirements 60 Hz frequency

PATENTS - TRADE MARKS - MODELS

- Patent No. IT0001428923
- Registered Community Model No. 002501486-0003

CURVES AND PERFORMANCE DATA 50 Hz

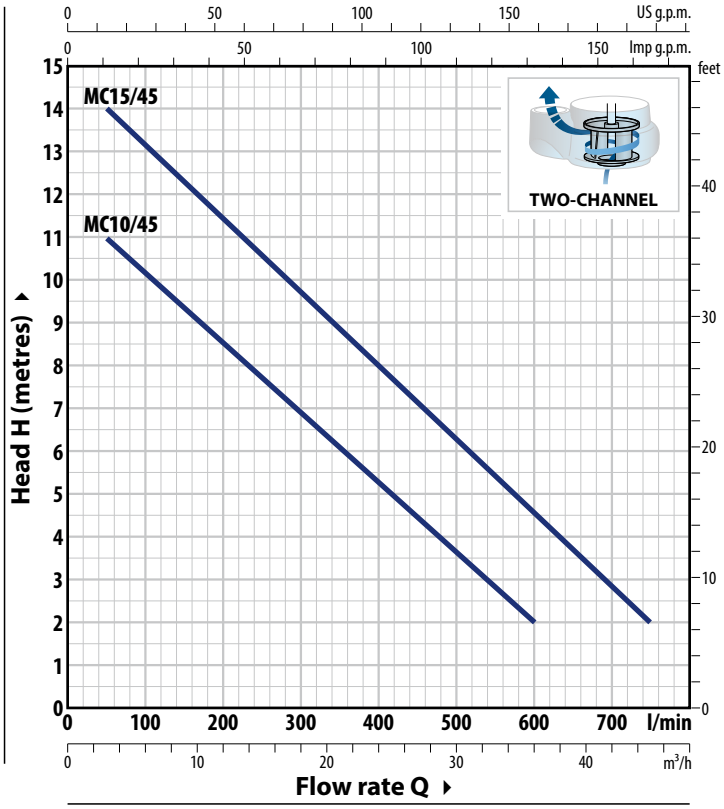

ABSORPTION

TYPE Single-phase	VOLTAGE **230 V**
MCm 10/45	5.0 A
MCm 15/45	8.2 A

TYPE Three-phase	VOLTAGE **400 V**
MC 10/45	2.1 A
MC 15/45	3.2 A

TYPE		POWER (P2)		Q m³/h	0	3	6	12	18	24	30	36	42	45
Single-phase	**Three-phase**	**kW**	**HP**	l/min	**0**	**50**	**100**	**200**	**300**	**400**	**500**	**600**	**700**	**750**
MCm 10/45	**MC 10/45**	0.75	1	**H** metres	12	11	10	8.5	7	5	3.5	2		
MCm 15/45	**MC 15/45**	1.1	1.5		15	14	13	11.5	9.7	8	6.3	4.5	3	2

Q = Flow rate **H** = Total manometric head

Performance curves comply with EN ISO 9906 Grade 3B tolerance limits.

MATERIALS AND COMPONENTS

1	**Pump body**	Cast iron with cataphoresis treatment for greater corrosion resistance with ISO 228/1 threaded port
2	**Base**	Stainless steel **AISI 304**
3	**Impeller**	Two-channel type in micro-cast **AISI 304** stainless steel
4	**Motor holder**	Cast iron with cataphoresis treatment
5	**Motor cover**	Stainless steel **AISI 304**
6	**Motor shaft**	Stainless steel **AISI 431**

7 Double mechanical seal with interposed oil chamber

Seal	Shaft	Location	Materials
MG1-14D SIC	Ø 14 mm	Motor side	SiC / Graphite / NBR
		Pump side	SiC / SiC / NBR

8 Electric motor
MCm: single-phase 230 V - 50 Hz
with winding integrated thermal motor protection
MC: three-phase 400 V - 50Hz
– Insulation: class F – Protection rating: IP X8

9 Power cord
Type 'H07 RN-F' (Schuko plug exclusive to single-phase models)
※ Standard length 10 metres

10 Float switch
(exclusive to single-phase models)

11 Tilting device for the float cable
(exclusive to single-phase models)
Patent No. IT0001428923

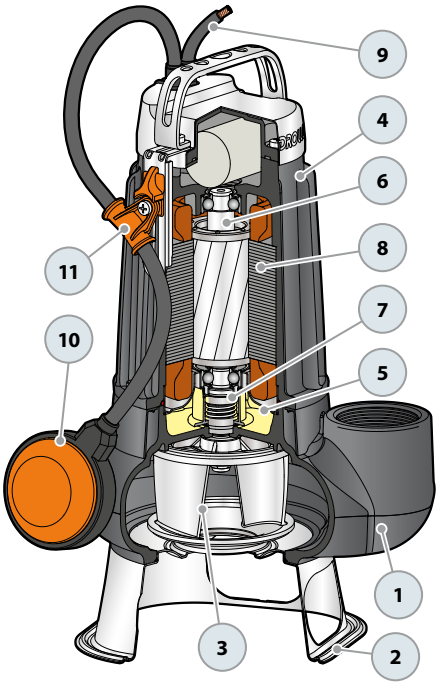

DIMENSIONS AND WEIGHT

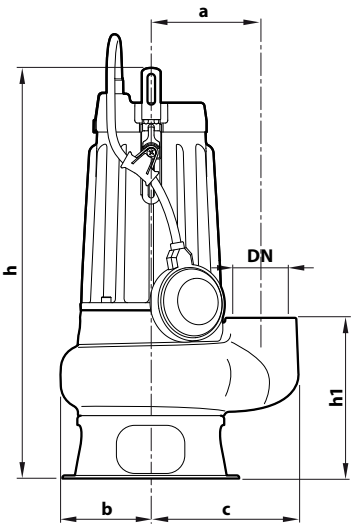

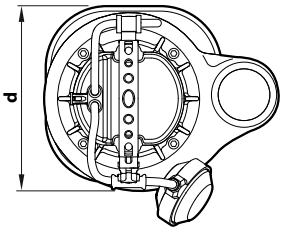

Typical installation

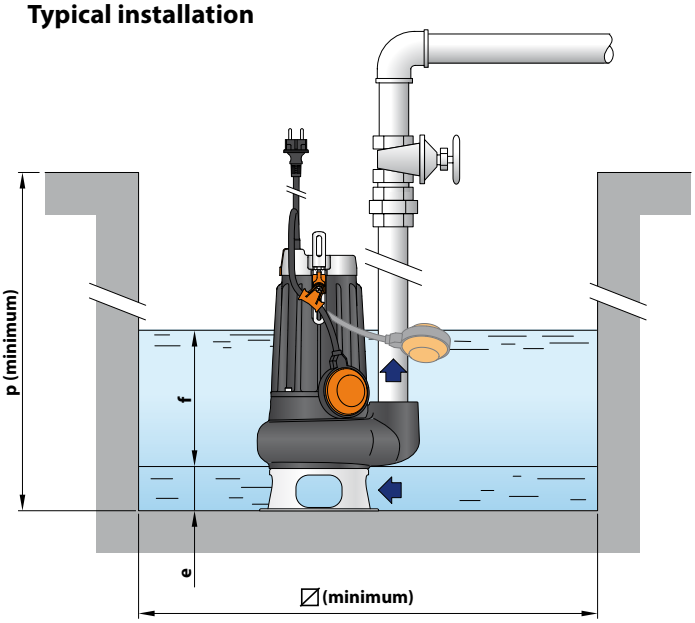

TYPE		PORT	Passage of solid bodies	DIMENSIONS mm										kg		PALLET CAPACITY
Single-ph.	**Three-ph**	**DN**		a	b	c	d	h	h1	e	f	p	⧄	1~	3~	
MCm 10/45	**MC 10/45**	**2"**	**Ø 50 mm**	115	95	155	200	434	169	60	adjustable	500	500	19.2	17.7	45
MCm 15/45	**MC 15/45**													20.1	19.3	45

DC Submersible pumps for drainage

Clear waters
Domestic use
Civil use
Industrial use

※ **High-quality materials and robust construction ensure superior performance and reliability**

PERFORMANCE RANGE

- Flow rate up to **550 l/min** (33 m³/h)
- Head up to **38 m**

INSTALLATION AND USE

DC submersible pumps are constructed from thick cast iron, offering exceptional robustness, abrasion resistance, and longevity. Perfect for **draining both clear and slightly dirty water**, their durability and reliability set them apart. Designed for automated fixed installations, the **DC** series guarantees continuous operation, even in conditions where they are not fully submerged.

INCLUDES

※ Power cable length **10 m**
※ Float switch (exclusive to single-phase models)
※ Switchbox compatible with DCm42, DCm43 (exclusive to single-phase models)

APPLICATION LIMITS

- Maximum operating depth below water level up to **10 m** (with an appropriately sized power cable)
- Liquid temperature up to **+40 °C**
- Capable of processing suspended solids up to **Ø 10 mm**
- Draining capability:
  - up to **17 mm** from the bottom for DC 10-20-30
  - up to **25 mm** from the bottom for DC 42-43-44
- **Minimum immersion for continuous service:**
  - **220 mm DC 10-20-30**
  - **300 mm DC 42-43-44**

AVAILABLE UPON REQUEST

※ Different voltage requirements 60 Hz frequency

WARRANTY

※ **The warranty for the Three-Phase DC 42-43-44 models remains valid only if the motor's built-in thermal protector is properly connected to the control panel. This connection is essential for the warranty's applicability**

PATENTS - TRADE MARKS - MODELS

- Patent No. IT0001428923
- Registered Community Model No. 002501486-0001

CURVES AND PERFORMANCE DATA

50 Hz

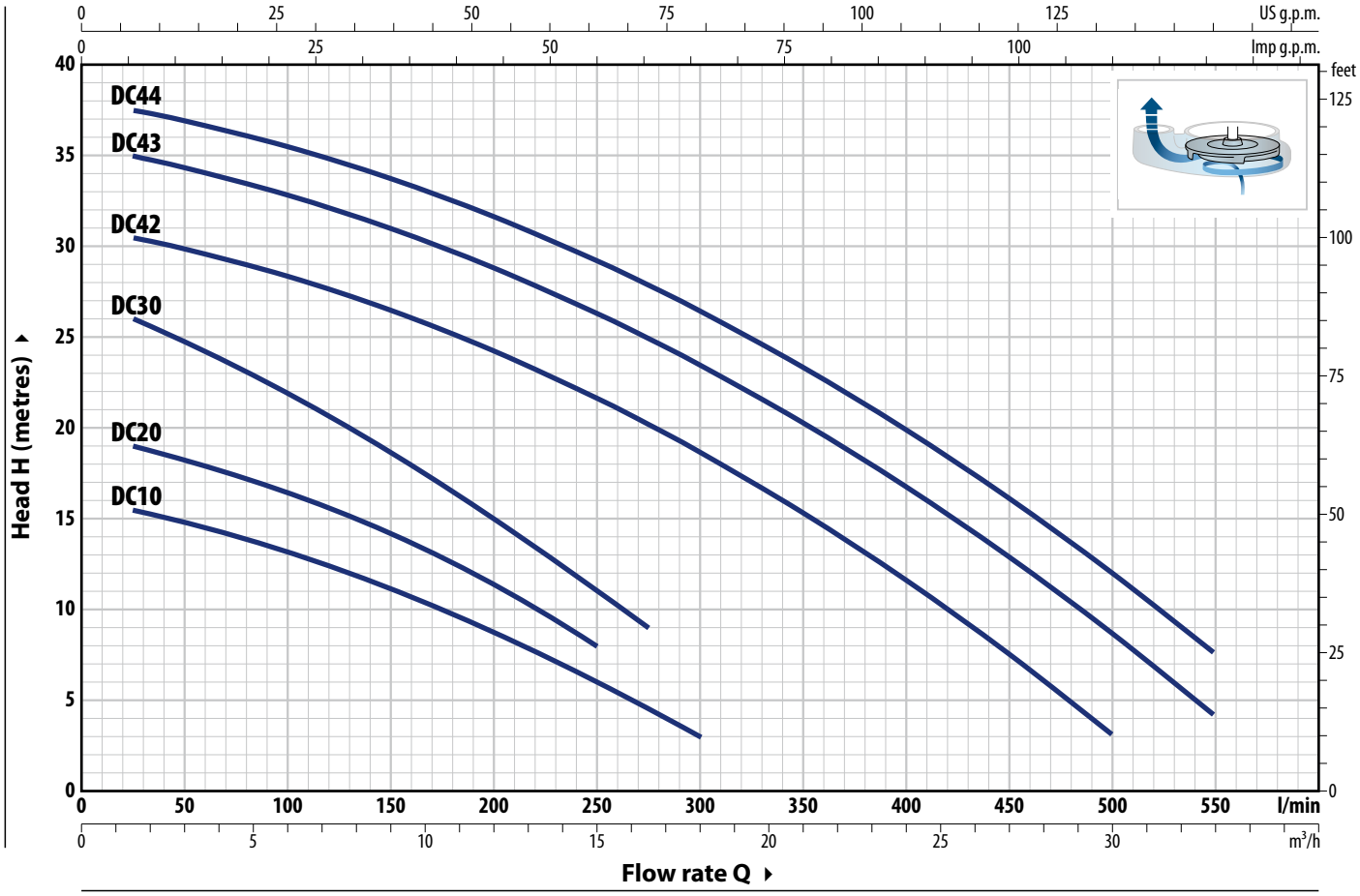

TYPE		POWER (P2)		Q m³/h	0	1.5	3.0	6.0	9.0	12.0	15.0	16.5	18.0	21.0	24.0	27.0	30.0	33.0
Single-ph.	**Three-ph.**	**kW**	**HP**	l/min	**0**	**25**	**50**	**100**	**150**	**200**	**250**	**275**	**300**	**350**	**400**	**450**	**500**	**550**
DCm 10	**DC 10**	0.75	1	H metres	16	15.5	14.8	13.2	11.2	8.8	6	4.5	3					
DCm 20	**DC 20**	0.75	1		20	19	18.5	16.5	14.3	11.5	8							
DCm 30	**DC 30**	1.1	1.5		26	26	24.8	22	18.7	15	11	9						
DCm 42	**DC 42**	1.5	2		31	30.5	30	28.4	26.5	24.3	21.6	20.2	18.6	15.3	11.6	7.5	3	
DCm 43	**DC 43**	2.2	3		35.5	35	34.4	33	31	28.8	26.3	25	23.5	20.3	16.7	12.8	8.5	4
–	**DC 44**	3	4		38	37.5	37	35.5	33.7	31.6	29.2	27.8	26.4	23.3	20	16	12	7.5

Q = Flow rate **H** = Total manometric head

Performance curves comply with EN ISO 9906 Grade 3B tolerance limits.

ABSORPTION

TYPE **Single-phase**	VOLTAGE **230 V**
DCm 10	5.0 A
DCm 20	5.7 A
DCm 30	7.2 A
DCm 42	13.0 A
DCm 43	16.0 A

TYPE **Three-phase**	VOLTAGE **400 V**
DC 10	2.0 A
DC 20	2.4 A
DC 30	3.0 A
DC 42	5.2 A
DC 43	6.2 A
DC 44	6.8 A

DIMENSIONS AND WEIGHT

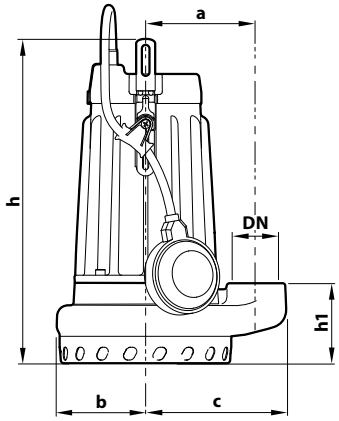

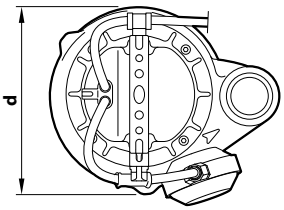

Typical installation

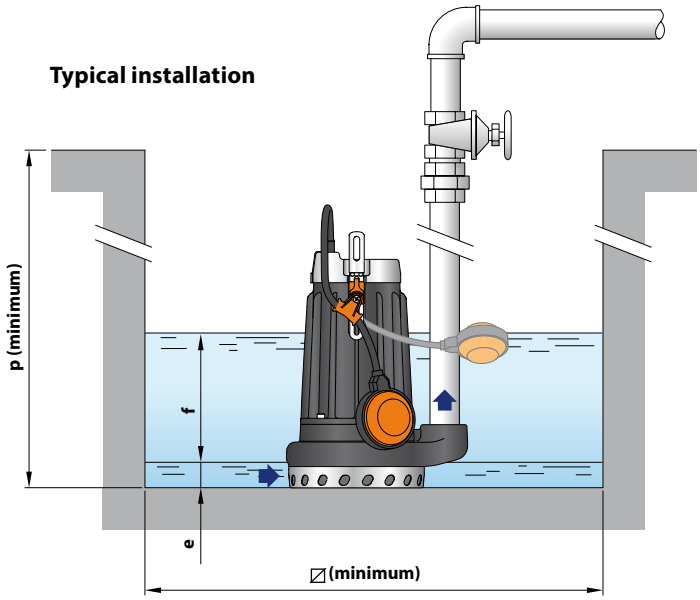

TYPE		PORT	DIMENSIONS mm										kg	
Single-ph.	**Three-ph.**	**DN**	a	b	c	d	h	h1	e	f	p	⧄	1~	3~
DCm 10	**DC 10**			85		177	336	73					16.9	15.8
DCm 20	**DC 20**	**1½"**	115		147				17	adjustable	500	500	16.9	15.9
DCm 30	**DC 30**			93		195	340	84					19.0	17.7

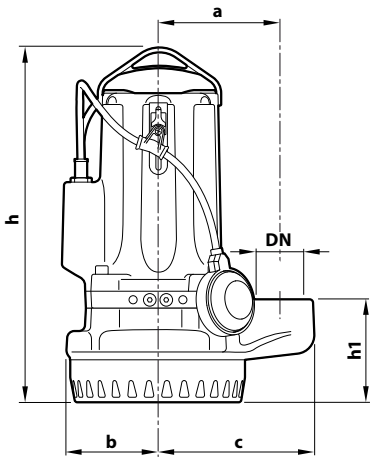

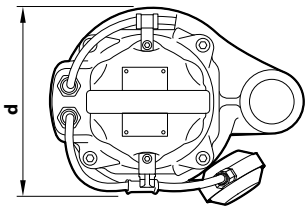

Typical installation

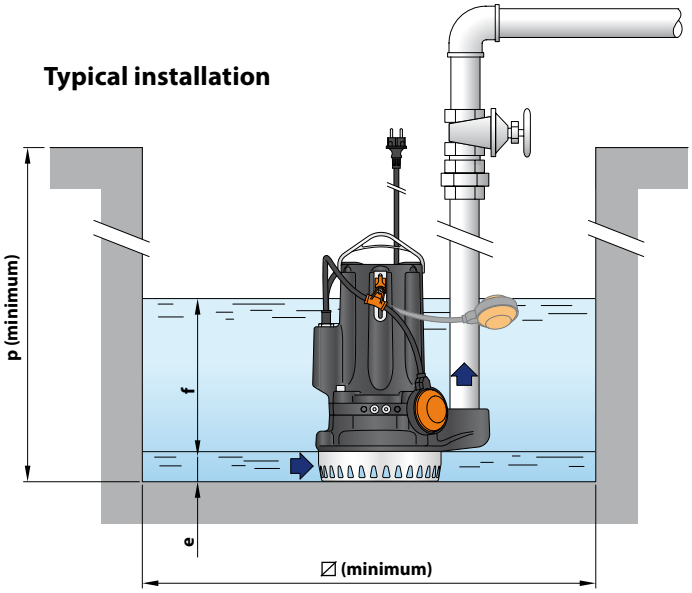

TYPE		PORT	DIMENSIONS mm										kg	
Single-ph.	**Three-ph.**	**DN**	a	b	c	d	h	h1	e	f	p	⧄	1~	3~
DCm 42	**DC 42**						434						42.0	41.0
DCm 43	**DC 43**	**2"**	150	112	190	230	460 | 434	125	25	adjustable	800	800	47.0	42.0
–	**DC 44**						460						–	47.0

PALLET CAPACITY

TYPE		NO. OF PUMPS
Single-ph.	**Three-ph.**	
DCm 10	**DC 10**	60
DCm 20	**DC 20**	60
DCm 30	**DC 30**	60

TYPE		NO. OF PUMPS
Single-ph.	**Three-ph.**	
DCm 42	**DC 42**	16
DCm 43	**DC 43**	16
–	**DC 44**	16

MATERIALS AND COMPONENTS

DC 10-20-30

1	**Pump body**	Cast iron with cataphoresis
2	**Grid**	Stainless steel **AISI 304**
3	**Cover**	Stainless steel **AISI 304**
4	**Impeller**	Open type in technopolymer
5	**Motor holder**	Cast iron with cataphoresis
6	**Motor cover**	Stainless steel **AISI 304**
7	**Motor shaft**	Stainless steel **AISI 431**

8 Double mechanical seal in oil chamber

Pump	Seal	Shaft	Materials
DC10 DC20	**MG1-14D SIC**	Ø 14 mm	SiC / Graphite / NBR SiC / SiC / NBR
Double shaft seal with sealing ring Ø 16 x Ø 24 x H 5 mm			
DC30	**ST1-14 SIC**	Ø 14 mm	Ceramic / C. silicon / NBR

9 Electric Motor

DCm :single-phase 230 V - 50 Hz
with thermal motor protection
DC: three-phase 400 V - 50Hz
– Insulation: class F – Protection rating: IP X8

10 Power cord
(Schuko plug exclusive to single-phase models)
※ 10 metres 'H07 RN-F' type

11 Float switch

12 Tilting device for the float cable
(exclusive to single-ph. models) Patent No. IT0001428923

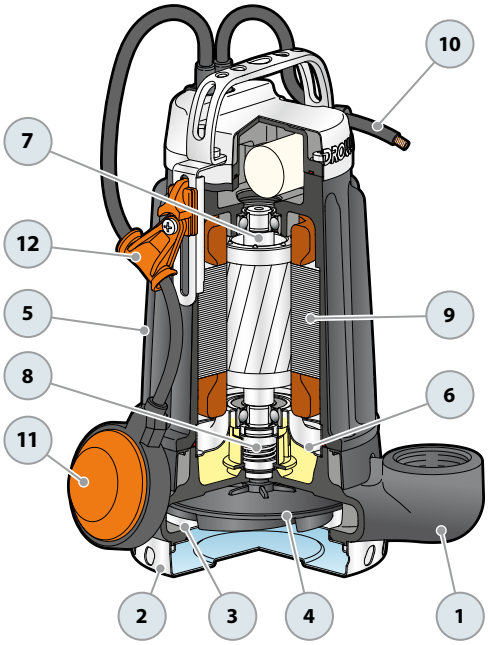

DC 42-43-44

1	**Pump body**	Cast iron with cataphoresis
2	**Grid**	Stainless steel **AISI 304**
3	**Cover**	Cast iron with cataphoresis
4	**Impeller**	Stainless steel **AISI 304** micro-cast
5	**Motor holder**	Cast iron with cataphoresis
6	**Motor cover**	Cast iron with cataphoresis
7	**Motor shaft**	Stainless steel **AISI 431**

8 Double mechanical seal with interposed oil chamber

Seal	Shaft	Location	Materials
STA-24	Ø 24 mm	Motor side	Ceramic / Graphite / NBR
STA-22 SIC	Ø 22 mm	Motor side	SiC / SiC / NBR

9 Electric Motor

DCm :single-phase 230 V - 50 Hz
with thermal motor protection
DC: three-phase 400 V - 50 Hz
with winding integrated thermal motor protection
to be connected to the control panel
– Insulation: class F – Protection rating: IP X8

10 Power cord
※ 10 metres 'H07 RN-F' type

11 Float switch

12 Switch cabinet for DCM 42, DCM 43
(exclusive to single-phase models)

13 Tilting device for the float cable
(exclusive to single-ph. models) Patent No. IT0001428923

Control panel
(standard for single-phase versions)

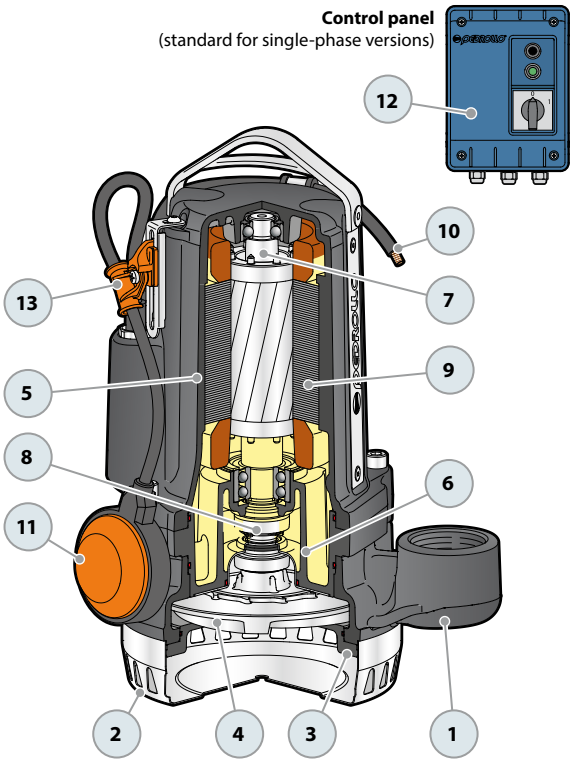

TRITUS-TX Submersible pumps with grinder

Sewage Domestic use

INSTALLATION AND USE

The **TRITUS-TX** grinder pump is equipped with a robust, hardened **stainless steel blade**, expertly designed to cut through solids and fibers found in **domestic wastewater and sewage**. It includes a compact, integrated magnetic float switch with a vertical sliding mechanism. This innovative design ensures outmost electrical safety while facilitating operation in confined spaces, requiring as little as **220 mm** of clearance from the pit wall.

INCLUDES

※ **5 m** power cable
※ float switch

APPLICATION LIMITS

- Depth below water level up to **5 m** (with an appropriately sized power cable)
- Liquid temperature up to **+40 °C**
- Bottom drainage level up to **85 mm**

AVAILABLE UPON REQUEST

※ Power cable length **10 m**
※ Different voltage requirements 60 Hz frequency

PATENTS - TRADE MARKS - MODELS

- TRITUS® Registered Trade mark No. 013017181

CURVES AND PERFORMANCE DATA 50 Hz

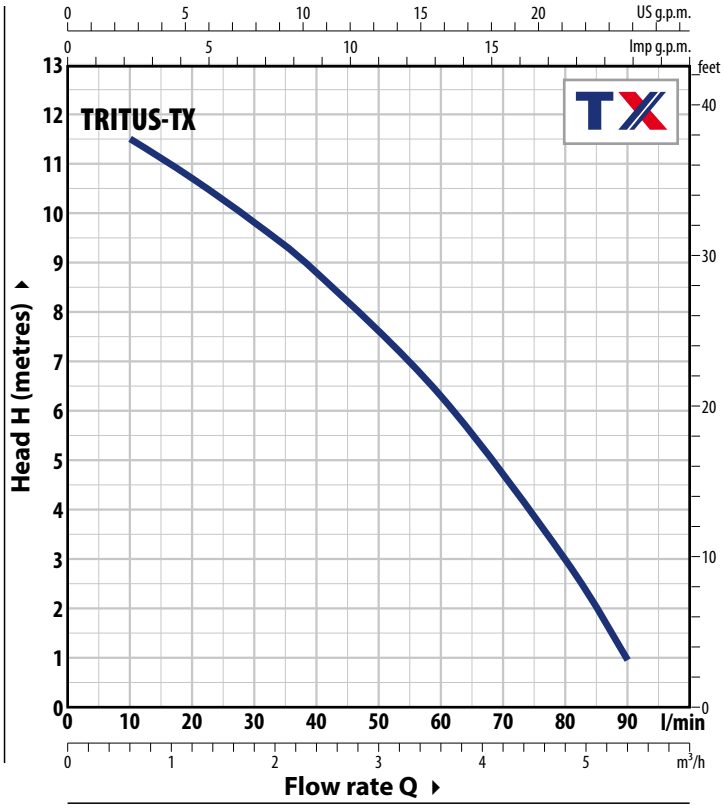

ABSORPTION

TYPE **Single-phase**	VOLTAGE **230 V**
TRITUS-TX	2.8 A

TYPE Single-phase	POWER (P2) kW	HP	Q m³/h l/min	0 **0**	0.6 **10**	1.2 **20**	1.8 **30**	2.4 **40**	3.6 **60**	4.8 **80**	5.4 **90**
TRITUS-TX	0.55	0.75	**H** metres	12.0	11.5	10.5	9.6	8.6	6.2	3.0	1.0

Q = Flow rate **H** = Total manometric head

Performance curves comply with EN ISO 9906 Grade 3B tolerance limits.

 ※ **Start of production 06.2024** ※

MATERIALS AND COMPONENTS

1	**Handle**	Technopolymer
2	**Pump body**	Technopolymer with ISO 228/1 threaded metal insert delivery port
3	**Base**	Technopolymer
4	**Conveyor belt**	Technopolymer
5	**Impeller**	Noryl™
6	**Grinder**	Hardened **AISI 440C** stainless steel
7	**Motor sleeve**	Stainless steel **AISI 304**
8	**Motor cover**	Stainless steel **AISI 304**
9	**Motor shaft**	Stainless steel **AISI 431**
10	**Double shaft seal with interposed oil chamber**	

Seal	Shaft	Materials
STA-12R	Ø 12 mm	Ceramic / Graphite /NBR
Shaft seal	Ø 12 x Ø 19 x H 5 mm	

11	**Capacitor**	
12	**Electric motor** single-phase 230 V - 50 Hz with winding integrated thermal motor protection Continuous duty S1, - Class F - IP X8	
13	**Power cord** ※ 5 metres 'H07 RN-F' type with Schuko plug	
14	**Vertical solids magnetic float** (adjustable)	
15	**Hose connector Ø 40 mm**	

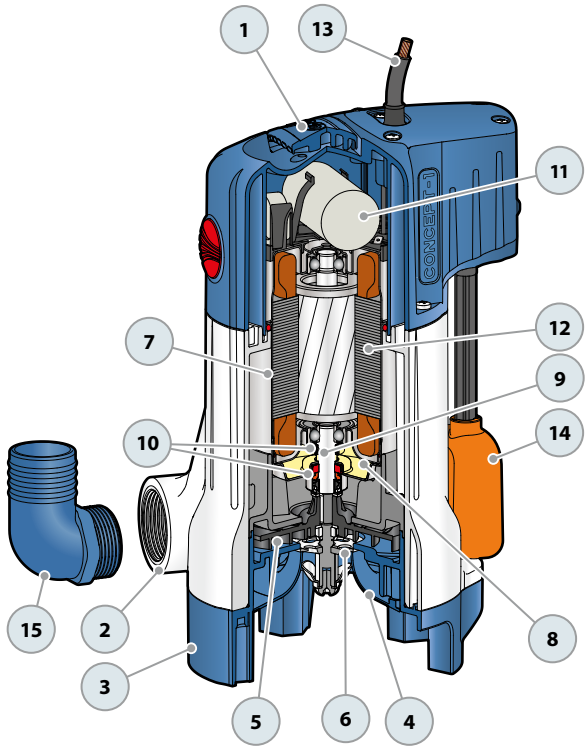

DIMENSIONS AND WEIGHT

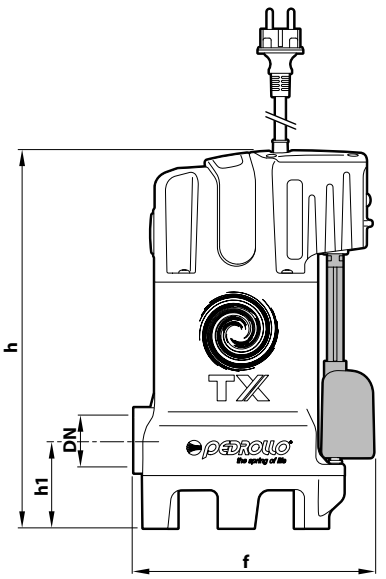

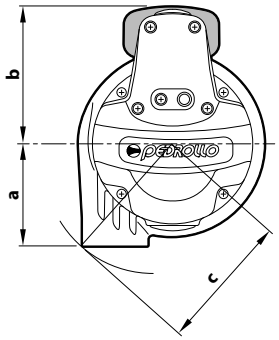

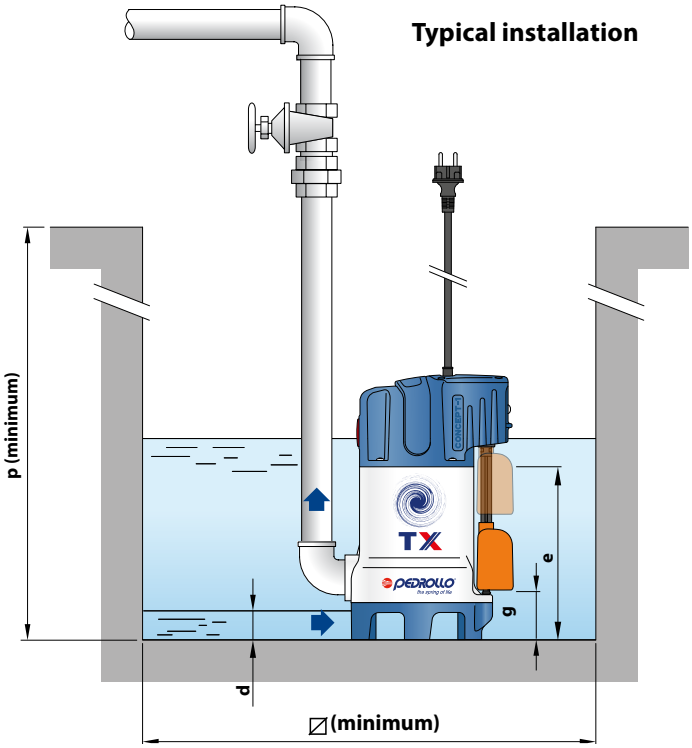

TYPE	PORT	DIMENSIONS mm												kg	PALLET CAPACITY
Single-phase	**DN**	a	b	c	f	h1	h	d	e	g (adjustable)	t	p	⌀	1~	
TRITUS-TX	**1¼"**	88	117	118	205	76	324	35	100	80 or 100	251	350	220	7.0	60

TRITUS-INOX Submersible pumps with grinder

Sewage
Domestic use
Civil use

※ **TRITUS-INOX pumps deliver reliable performance in demanding work conditions**

PERFORMANCE RANGE

- Flow rate up to **250 l/min** (15 m^3/h)
- Head up to **24 m**

INSTALLATION AND USE

The **TRITUS-INOX** series is equipped with a robust, **hardened stainless steel blade**, expertly designed to cut through solids and fibers found in domestic wastewater and sewage, for pressurized for pressurized transfer of materials into sewage systems via small-diameter piping

INCLUDES

※ Power cable length **10 m**
※ Float switch (exclusive to single-phase models)

APPLICATION LIMITS

- Depth below water level up to **5 m** (with an appropriately sized power cable)
- Liquid temperature up to **+40 °C**
- Bottom drainage level up to **85 mm**
- **Minimum immersion for continuous service: 300 mm**

AVAILABLE UPON REQUEST

※ Different voltage requirements 60 Hz frequency
※ Three-phase pumps
※ For TIGm 1.1 and TIGm 1.3 external control cabinet for increased operational safety due to special capacitor that significantly increases torque. The panel includes the manual reset motor protection switch.

PATENTS - TRADE MARKS - MODELS

- Patent No. EP2313658
- Patent No. IT0001428923
- TRITUS® Registered Trade mark No. 013017181

CURVES AND PERFORMANCE DATA

50 Hz

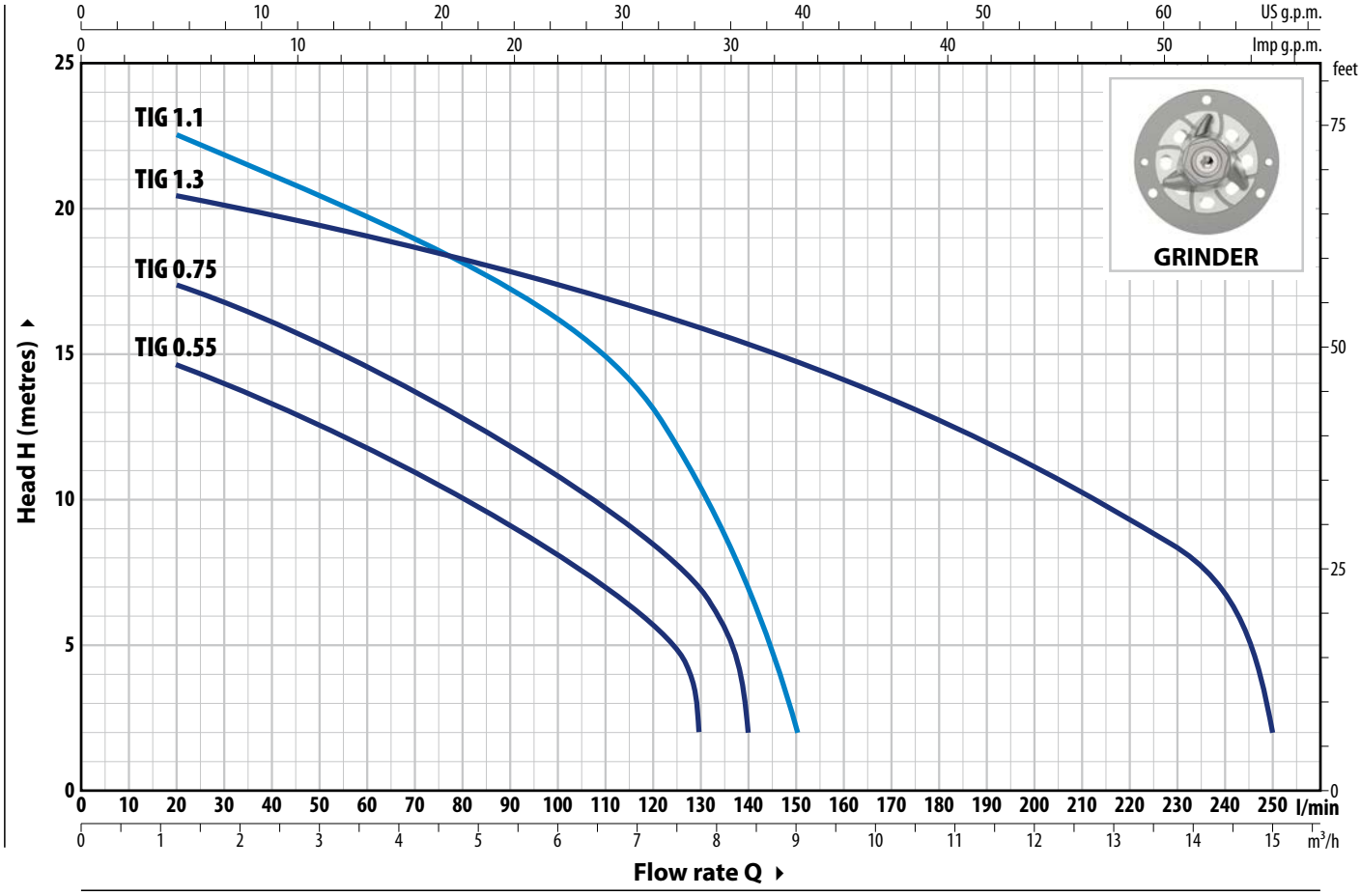

TYPE Single-phase	POWER (P2) kW	HP	Q m³/h / l/min	0 / 0	1.2 / 20	2.4 / 40	3.6 / 60	4.8 / 80	6 / 100	7.2 / 120	7.8 / 130	8.4 / 140	9 / 150	10.2 / 170	12 / 200	13.2 / 220	14.4 / 240	15 / 250
TIGm 0.55	0.55	0.75	H metres	16	14.5	13.3	11.8	10	8	5.7	2							
TIGm 0.75	0.75	1		18.5	17.5	16	14.6	12.8	10.8	14	7	2						
TIGm 1.1	1.1	1.5		24	22.5	21	19.5	18	16.3	13	10.4	6.8	2					
TIGm 1.3	1.3	1.75		21	20.5	19.7	19	18.2	17.4	16.5	16	15.4	14.8	13.5	11	9.2	7	2

Q = Flow rate **H** = Total manometric head

Performance curves comply with EN ISO 9906 Grade 3B tolerance limits.

ABSORPTION

TYPE Single-phase	VOLTAGE 230 V
TIGm 0.55	4.5 A
TIGm 0.75	5.5 A
TIGm 1.1	6.7 A
TIGm 1.3	7.0 A

DIMENSIONS AND WEIGHT

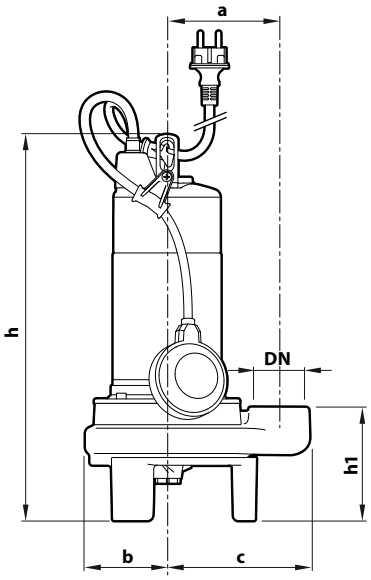

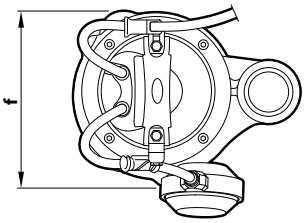

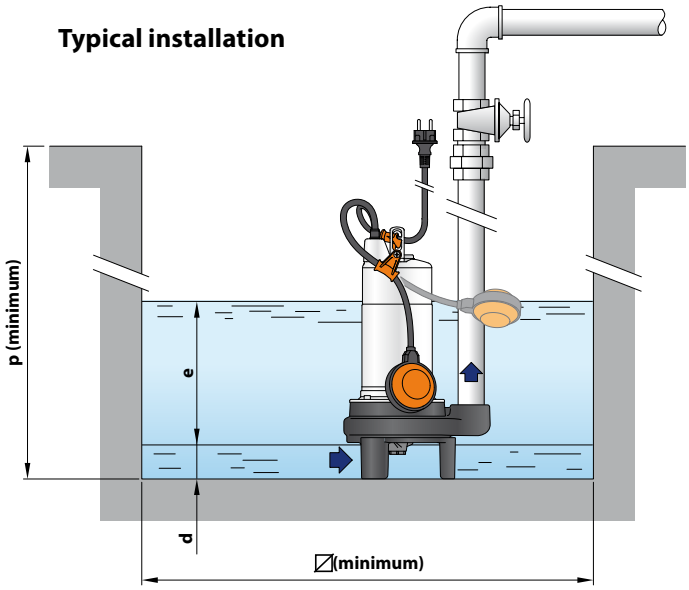

TYPE **Single-phase**	PORT **DN**	DIMENSIONS mm a	b	c	f	h	h1	d	e	p	∅	kg 1~
TIGm 0.55	**1½"**	115	85	147	177	398	117	65	adjustable	500	500	15.9
TIGm 0.75												16.0
TIGm 1.1			93		195	432	127	70				18.3
TIGm 1.3												18.3

PALLET CAPACITY

TYPE **Single-phase**	NO. OF PUMPS
TIGm 0.55	60
TIGm 0.75	60
TIGm 1.1	45
TIGm 1.3	45

MATERIALS AND COMPONENTS

1	**Pump body**	Cast iron with cataphoresis treatment, provided with ISO 228/1 threaded port
2	**Impeller**	Open type in technopolymer
3	**Grinder**	Hardened **AISI 440C** stainless steel
4	**Motor shaft**	Stainless steel **AISI 431**
5	**Motor sleeve**	Stainless steel **AISI 304**

6 Double shaft seal with interposed oil chamber

Water pump	Seal	Shaft	Location	Materials
TIG 0.55 TIG 0.75	**MG1-14D SIC**	Ø 14 mm	Motor side	SiC / Graphite / NBR
			Pump side	SiC / SiC / NBR
TIG 1.1 TIG 1.3	**ST1-14 SIC**	Ø 14 mm		Ceramic / SiC / NBR
	Shaft seal	Ø 16 x Ø 24 x H 5 mm		

7 Electric motor
Single-phase 230 V - 50 Hz
with winding integrated thermal motor protection
- Insulation: class F
- Protection rating: IP X8

8 Power cord

※ 10 metres 'H07 RN-F' type with Schuko plug

9 Float switch

10 Tilting device for the float cable
Patent No. IT0001428923

11 Power cable strain relief
Patent No. EP2313658

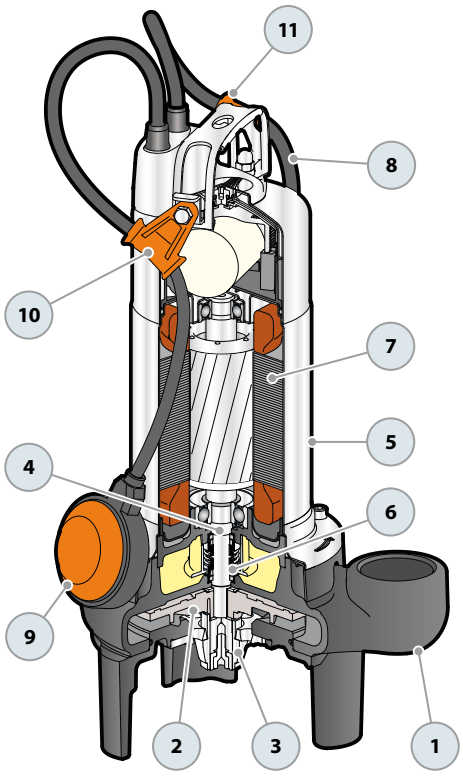

TRITUS Submersible pumps with grinder

Sewage
Domestic use
Industrial use

TRm 1.3

TRm 2.2 AP

PERFORMANCE RANGE

- Flow rate up to **410 l/min** (24.6 m³/h)
- Head up to **44.5 m**

INSTALLATION AND USE

The **TRITUS** is constructed from thick cast iron, offering exceptional robustness, abrasion resistance, and longevity. The pumps are equipped with a robust, **hardened stainless steel blade**, expertly designed to cut through solids and fibers found in **domestic and civil** wastewater and sewage, for pressurized transfer of materials into sewage systems via small-diameter piping

INCLUDES

※ Power cable length **10 m**
※ Float switch (exclusive to single-phase models)
※ Switchbox compatible with single-phase versions

APPLICATION LIMITS

- Depth below water level up to **10 m** (with an appropriately sized power cable)
- Liquid temperature up to **+40 °C**
- Draining capability from bottom up to:
  – **85 mm** for 0.75, 0.9, 1.1, 1.3
  – **95 mm** for 1.5, 2.2, TR 2.2 AP, TR 3 AP, TR 3, TR 4
- **Minimum immersion for continuous service:**
  – 300 mm for 0.75, 0.9, 1.1, 1.3
  – 350 mm for 1.5, 2.2, TR 2.2 AP, TR 3 AP, TR 3, TR 4

AVAILABLE UPON REQUEST

※ Different voltage requirements 60 Hz frequency

WARRANTY

※ **The warranty for the Three-Phase TR 1.5, TR 2.2, TR 2.2 AP, TR3 AP, TR3, TR 4 models remains valid only if the motor's built-in thermal protector is properly connected to the control panel. This connection is essential for the warranty's applicability.**

PATENTS - TRADE MARKS - MODELS

- Patent No. IT0001428923
- Registered Community Model No. 002501486-0002, 008625685-0005, 008625685-0006
- TRITUS® Registered Trade mark No. 013017181

CURVES AND PERFORMANCE DATA

50 Hz

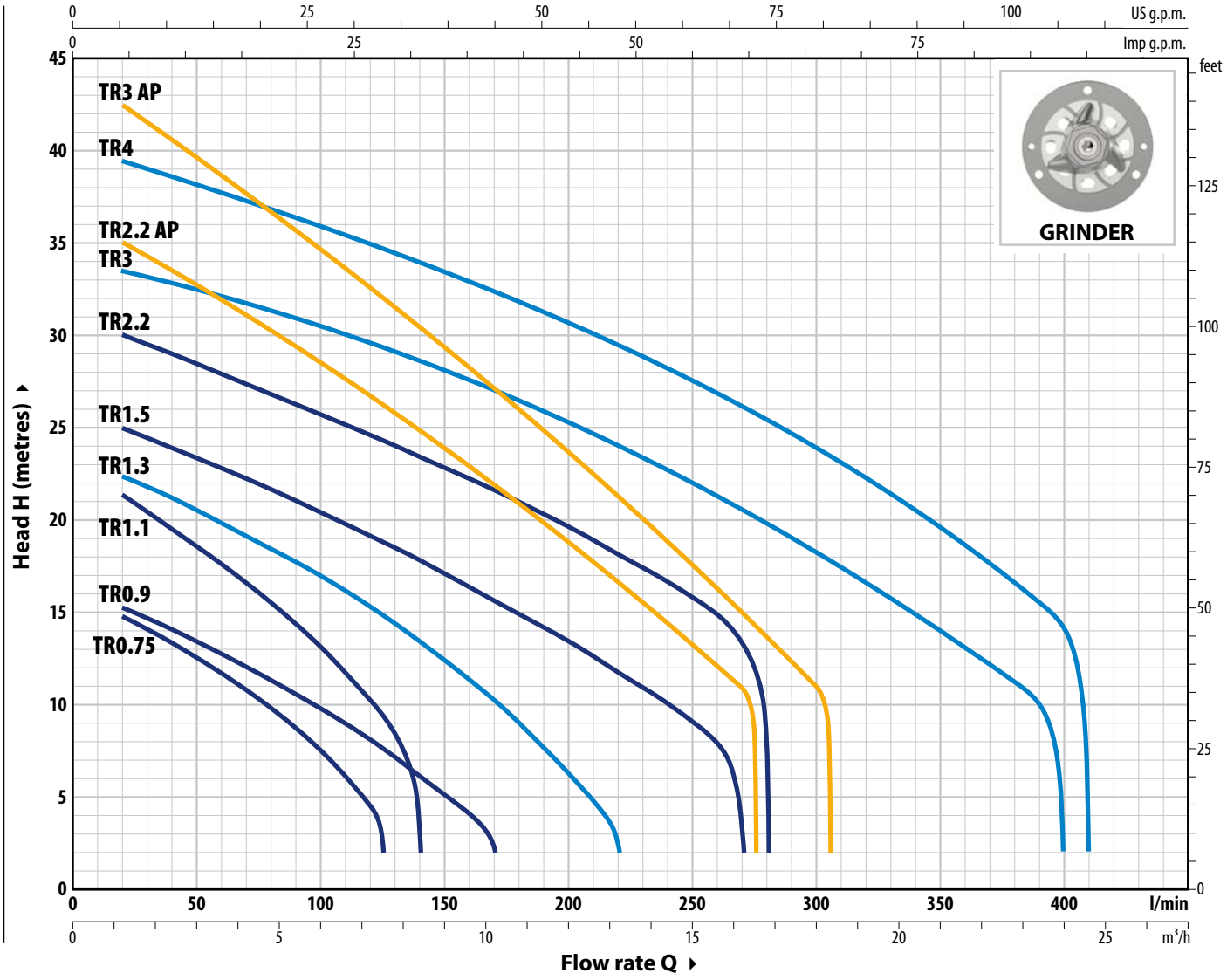

TYPE		POWER (P2)		Q m³/h	0	1.2	3	4.8	6	7.5	8.4	10.2	12	13.2	14.4	16.2	16.8
Single-ph.	**Three-ph.**	**kW**	**HP**	l/min	**0**	**20**	**50**	**80**	**100**	**125**	**140**	**170**	**200**	**220**	**240**	**270**	**280**
TRm 0.75	**TR 0.75**	0.75	1	H metres	16.5	15	12.7	10	7.5	2							
TRm 0.9	**TR 0.9**	0.9	1.25		16	15	13.2	11	9.6	7.5	6	2					
TRm 1.1	**TR 1.1**	1.1	1.5		23	21.5	18.6	15.5	13	9.5	2						
TRm 1.3	**TR 1.3**	1.3	1.75		23.5	22.5	20.6	18.4	17	14.8	13.4	10.2	6.2	2			
TRm 1.5	**TR 1.5**	1.5	2		26	25	23.4	21.7	20.4	18.8	17.8	15.6	13.4	11.7	10	2	
–	**TR 2.2**	2.2	3		31	30	28.4	26.8	25.7	24.3	23.5	21.5	19.5	18	16.5	13.2	2

TYPE		POWER (P2)		Q m³/h	0	1.2	3	6	9	12	15	16.5	18	18.3
Single-ph.	**Three-ph.**	**kW**	**HP**	l/min	**0**	**20**	**50**	**100**	**150**	**200**	**250**	**275**	**300**	**305**
TRm 2.2 AP	**TR 2.2 AP**	2.2	3	H metres	36.5	35	33	28.5	23.8	18.7	13.2	2		
–	**TR 3 AP**	3	4		44.5	42.5	40	35	29.5	23.7	17.5	14.3	11	2

TYPE	POWER (P2)		Q m³/h	0	1.2	3	6	9	12	15	18	21	24	24.6
Three-phase	**kW**	**HP**	l/min	**0**	**20**	**50**	**100**	**150**	**200**	**250**	**300**	**350**	**400**	**410**
TR 3	3	4	H metres	34.5	33.5	32.5	30.4	28	25.2	22	18.4	14.2	2	
TR 4	4	5.5		40	39.5	38	35.7	33.3	30.6	27.4	23.8	19.4	14.3	2

Q = Flow rate **H** = Total manometric head

Performance curves comply with EN ISO 9906 Grade 3B tolerance limits.

ABSORPTION

TYPE **Single-phase**	VOLTAGE **230 V**
TRm 0.75	5.5 A
TRm 0.9	6.0 A
TRm 1.1	7.4 A
TRm 1.3	9.0 A

TYPE **Three-phase**	VOLTAGE **400 V**
TR 0.75	2.5 A
TR 0.9	2.6 A
TR 1.1	3.0 A
TR 1.3	3.8 A

DIMENSIONS AND WEIGHT

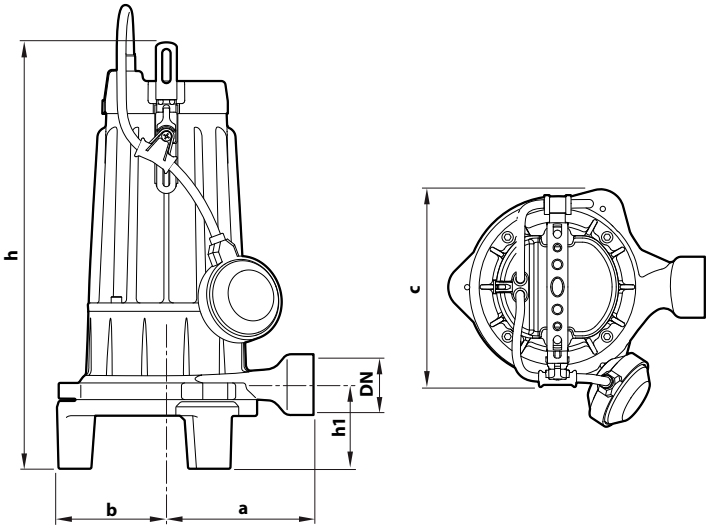

Typical installation

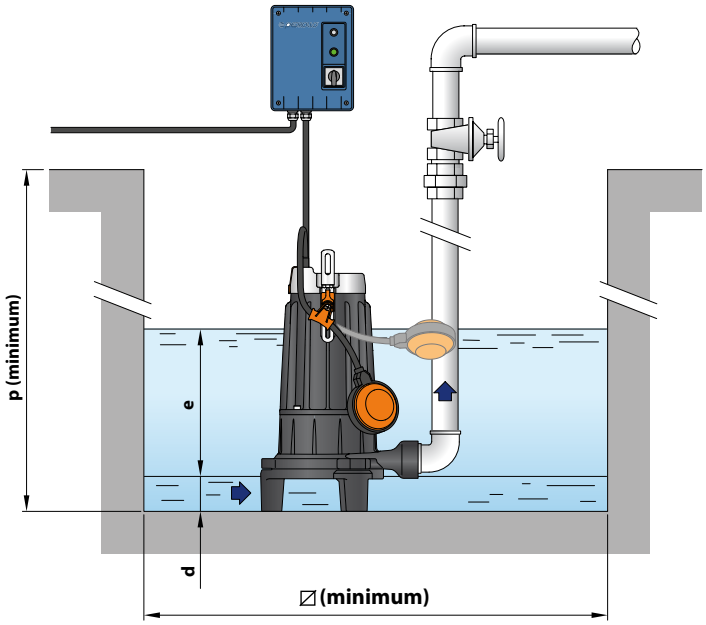

TYPE		PORT	DIMENSIONS mm									kg *	
Single-ph.	**Three-ph.**	**DN**	a	b	c	h	h1	d	e	p	⌀	1~	3~
TRm 0.75	**TR 0.75**	**1¼"**	140	104	186	406	80	85	adjustable	500	500	24.0	22.2
TRm 0.9	**TR 0.9**											23.9	22.2
TRm 1.1	**TR 1.1**											25.7	23.1
TRm 1.3	**TR 1.3**											25.5	23.1

(* weight of pump without control panel)

PALLET CAPACITY

TYPE **Single-ph.**	NO. OF PUMPS
TRm 0.75	36
TRm 0.9	36
TRm 1.1	36
TRm 1.3	36

TYPE **Three-ph.**	NO. OF PUMPS
TR 0.75	60
TR 0.9	60
TR 1.1	60
TR 1.3	60

MATERIALS AND COMPONENTS

1	**Pump body**	Cast iron with cataphoresis treatment
2	**Impeller**	Open type in technopolymer
3	**Grinder**	Hardened **AISI 440C** stainless steel
4	**Motor shaft**	Stainless steel **AISI 431**
5	**Motor holder**	Cast iron with cataphoresis treatment

6 Double mechanical seal in oil chamber

Seal	Shaft	Location	Materials
MG1-14D SIC	Ø 14 mm	Motor side	Silicon carbide / Graphite / NBR
		Pump side	Silicon carbide/Silicon carbide/NBR

7 Electric Motor

TRm: single-phase 230 V - 50 Hz with thermal motor protection

TR: three-phase 400 V - 50Hz

– Insulation: class F
– Protection rating: IP X8

8 Power cord

※ 10 metres 'H07 RN-F' type

9 Float switch

(exclusive to single-phase models)

10 Control panel (exclusive to single-phase models)

Including:
– ON/OFF switch
– manual reset motor protection
– operating capacitor (permanently switched on)
– starting capacitor

Control panel
(standard for single-phase versions)

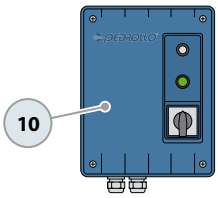

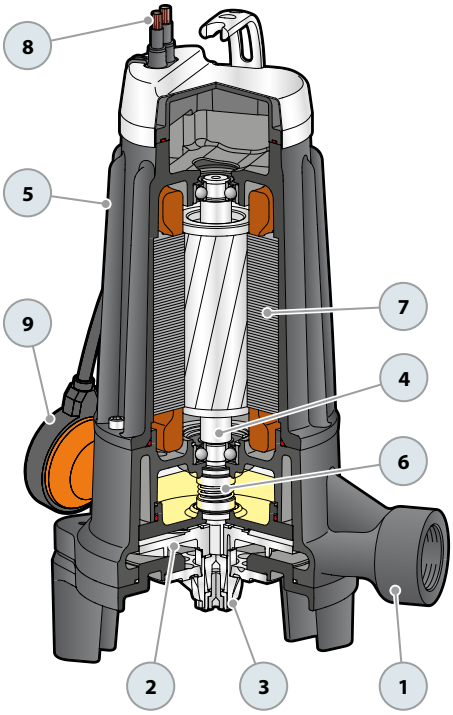

ABSORPTION

TYPE **Single-phase**	VOLTAGE **230 V**
TRm 1.5	10.0 A

TYPE **Three-phase**	VOLTAGE **400 V**
TR 1.5	3.7 A
TR 2.2	5.5 A

DIMENSIONS AND WEIGHT

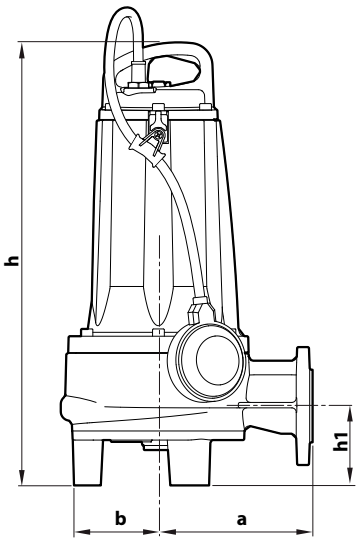

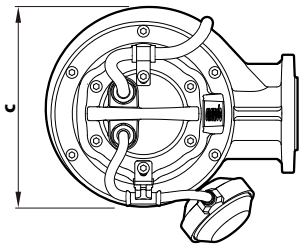

Typical installation

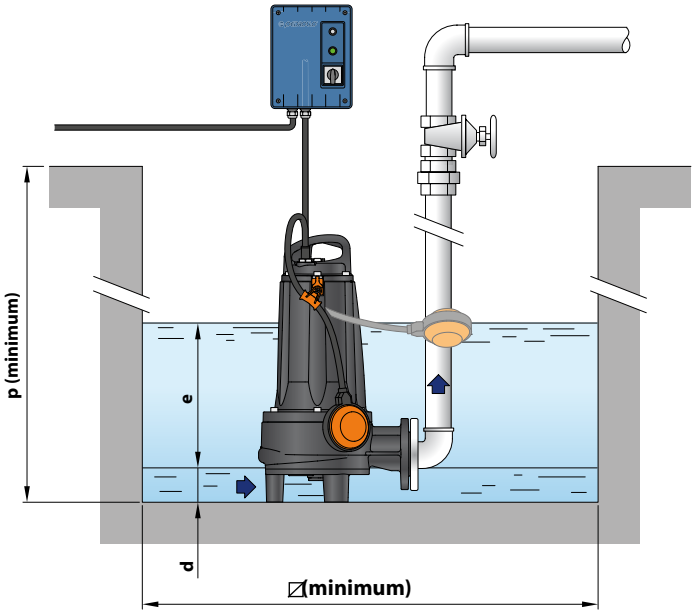

TYPE		DIMENSIONS mm									kg	
Single-phase	**Three-phase**	a	b	c	h	h1	d	e	p	⌀	1~	3~
TRm 1.5	**TR 1.5**	172	105	221	489	87.5	95	adjustable	800	800	45.0	44.0
–	**TR 2.2**										–	44.0

PORT FLANGE

TYPE		FLANGE	F	K	D	HOLES	
Single-phase	**Three-phase**	**DN**		mm	mm	N°	Ø (mm)
TRm 1.5	**TR 1.5**	**40** (PN6)	**1½"**	100	130	4	14
–	**TR 2.2**						

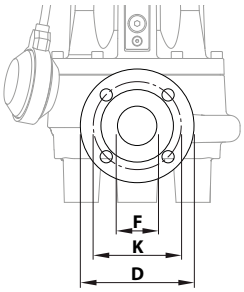

PALLET CAPACITY

TYPE		NO. OF PUMPS
Single-phase	**Three-phase**	
TRm 1.5	**TR 1.5**	12
–	**TR 2.2**	12

MATERIALS AND COMPONENTS

1	**Pump body**	Cast iron with cataphoresis treatment
2	**Impeller**	Micro-cast **AISI 304** stainless steel
3	**Grinder**	Hardened **AISI 440C** stainless steel
4	**Motor shaft**	Stainless steel **AISI 431**
5	**Motor holder**	Cast iron with cataphoresis treatment

6 Double mechanical seal with interposed oil chamber

Seal	Shaft	Location	Materials
STA-20	Ø 20 mm	Motor side	Ceramic / Graphite / NBR
STA-19	Ø 19 mm	Pump side	Silicon carbide/Silicon carbide/NBR

7 Electric Motor

TRm: single-phase 230 V - 50 Hz with thermal motor protection

TR: three-phase 400 V - 50Hz

※ with winding integrated thermal motor protection to be connected to the control panel

– Insulation: class F
– Protection rating: IP X8

8 Power cord

※ 10 metres 'H07 RN-F' type

9 Float switch

(exclusive to single-phase models)

10 Control panel (exclusive to single-phase models)

Including:
– ON/OFF switch
– manual reset motor protection
– operating capacitor (permanently switched on)
– starting capacitor

Control panel
(standard for single-phase versions)

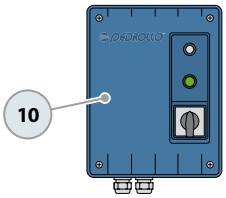

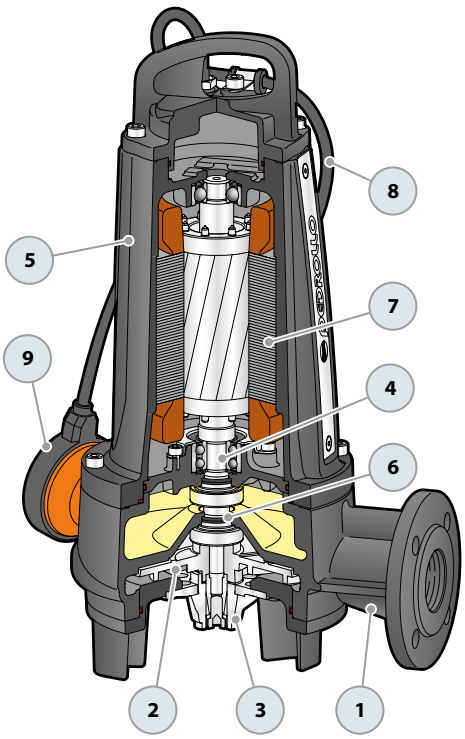

ABSORPTION

TYPE **Single-phase**	VOLTAGE **230 V**
TRm 2.2 AP	14.0 A

TYPE **Three-phase**	VOLTAGE **400 V**
TR 2.2 AP	5.5 A
TR 3 AP	6.3 A
TR 3	6.3 A
TR 4	7.5 A

DIMENSIONS AND WEIGHT

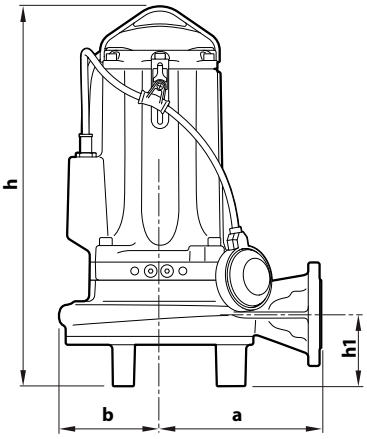

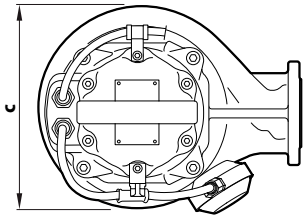

Typical installation

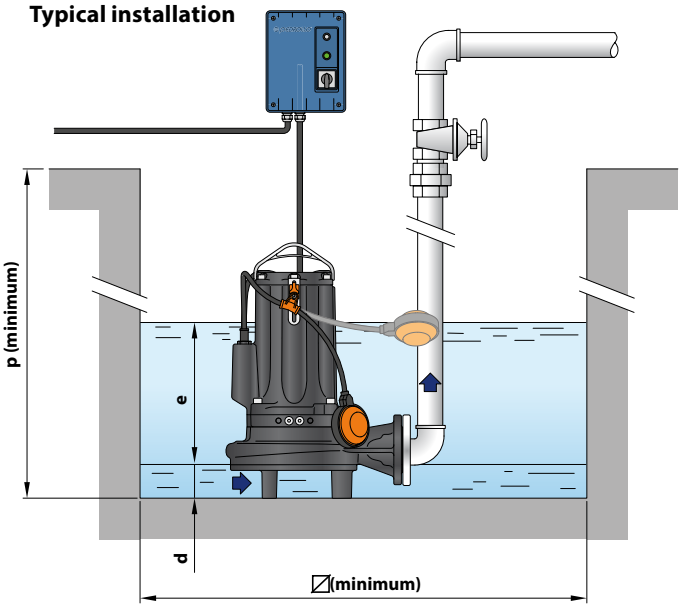

TYPE		DIMENSIONS mm									kg	
Single-phase	**Three-phase**	a	b	c	h	h1	d	e	p	⧄	1~	3~
TRm 2.2 AP	**TR 2.2 AP**	203	126	256	480 | 453	90	95	adjustable	800	800	53.5	47.0
–	**TR 3 AP**				480						–	53.0
	TR 3										–	53.0
	TR 4										–	54.0

PORT FLANGE

TYPE		FLANGE	F	K	D	L	HOLES	
Single-phase	**Three-phase**	**DN**		mm	mm	mm	N°	Ø mm
TRm 2.2 AP	**TR 2.2 AP**	**40** (PN10)	1½"	110	150	130	4	18
–	**TR 3 AP**							
–	**TR 3**							
–	**TR 4**							

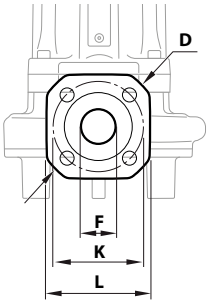

PALLET CAPACITY

TYPE		NO. OF PUMPS
Single-phase	**Three-phase**	
TRm 2.2 AP	**TR 2.2 AP**	18
–	**TR 3 AP**	18
–	**TR 3**	18
–	**TR 4**	18

MATERIALS AND COMPONENTS

1	**Pump body**	Cast iron with cataphoresis treatment
2	**Impeller**	Open type in micro-cast **AISI 304** stainless steel
3	**Grinder**	Hardened **AISI 440C** stainless steel
4	**Motor shaft**	Stainless steel **AISI 431**
5	**Motor holder**	Cast iron with cataphoresis treatment
6	**Motor bracket**	Cast iron with cataphoresis treatment

7 Double mechanical seal with interposed oil chamber

Seal	Shaft	Location	Materials
STA-24	Ø 24 mm	Motor side	Ceramic / Graphite / NBR
STA-22 SIC	Ø 22 mm	Pump side	Silicon Carbide/Silicon Carbide/NBR

8 Electric Motor

TRm: single-phase 230 V - 50 Hz with thermal motor protection

TR: three-phase 400 V - 50Hz
※ with winding integrated thermal motor protection to be connected to the control panel

– Insulation: class F
– Protection rating: IP X8

9 Power cord

※ 10 metres 'H07 RN-F' type

10 Float switch

(exclusive to single-phase models)

11 Control panel (exclusive to single-phase models)

Including:
– ON/OFF switch
– manual reset motor protection
– operating capacitor (permanently switched on)
– starting capacitor

Control panel
(standard for single-phase versions)

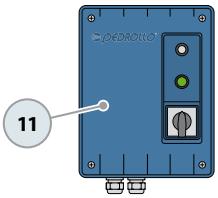

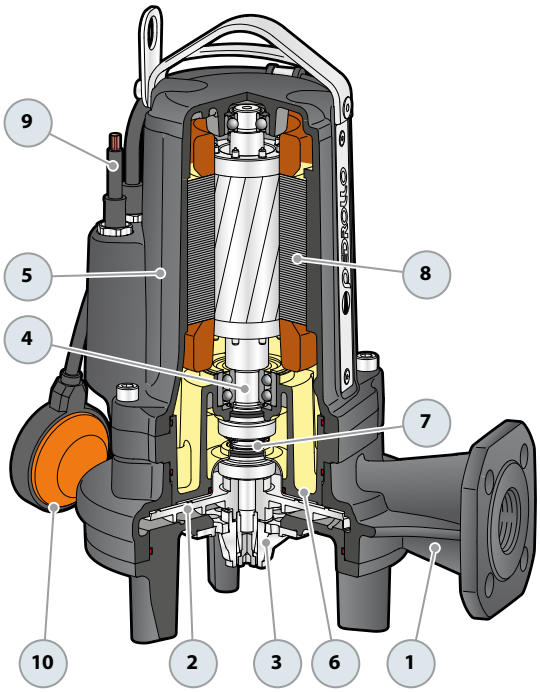

SEWAGE LIFTING SYSTEM (TRITUS 0.75 - 2.2)

VERSION WITH HORIZONTAL DELIVERY AND ¾" GUIDE PIPES

For **TR 0.75, 0.9, 1.1, 1.3**	Code ASSPTRITUS11	**DN 2"**
For **TR 1.5, 2.2**	Code ASSPTRITUS22	**DN 2"**

※ Kit consisting of:

Coupling foot

Guide rail

Support for guide tubes

VERSION WITH VERTICAL DELIVERY AND ¾" GUIDE PIPES

For **TR 0.75, 0.9, 1.1, 1.3**	Code ASSPTRITUS11V	**DN 2½"**
For **TR 1.5, 2.2**	Code ASSPTRITUS22V	**DN 2½"**

※ Kit consisting of:

Coupling foot complete with counter-flange

Guide rail

Support for guide tubes

● ACCESSORIES AVAILABLE FOR ORDER

RUNNING GUIDE

※ For TR 0.75, 0.9, 1.1, 1.3	Code ASSFL003
※ For TR 1.5, 2.2	Code ASSFL004

Complete with ring nut and gasket for 0.75, 0.9, 1.1, 1.3
Complete with screws and seals for TR 1.5, 2.2

GUIDE TUBE SUPPORT

※ For Ø ¾ " guide tubes	Code 859SV340INTFA

To ensure stability, insert a support every 2 metres along the guide tube

GUIDE TUBE (AISI 304 stainless steel)

※ 2 metres Ø ¾" guide tube	Code 54SARTG0052F
※ 3 metres Ø ¾" guide tube	Code 54SARTG0053F
※ 6 metres Ø ¾" guide tube	Code 54SARTG0056F

DIMENSIONS (Version with horizontal outlet)

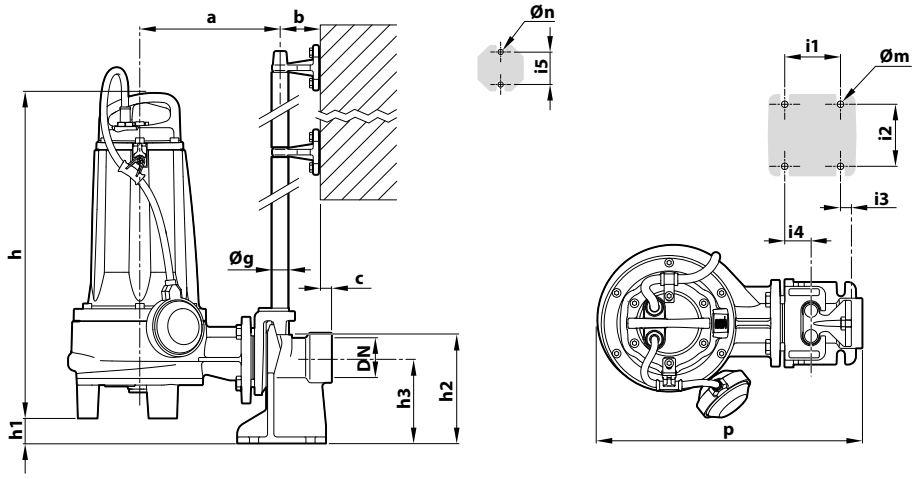

TYPE		PORT	Solid bodies	DIMENSIONS mm														
Single-ph.	**Three-ph.**	**DN**		a	b	c	p	h1	h2	h3	i1	i2	i3	i4	i5	Øg	Øm	Øn
TRm 0.75	**TR 0.75**	**2"**	**Ø 7 mm**	212	61	17	395	50	165	130	85	94	16	40	50	¾"	14	11
TRm 0.9	**TR 0.9**																	
TRm 1.1	**TR 1.1**																	
TRm 1.3	**TR 1.3**																	
TRm 1.5	**TR 1.5**	**2"**	**Ø 7 mm**	215	61	17	400	42.5	165	130	85	94	16	40	50	¾"	14	11
–	**TR 2.2**																	

DIMENSIONS (Version with vertical delivery)

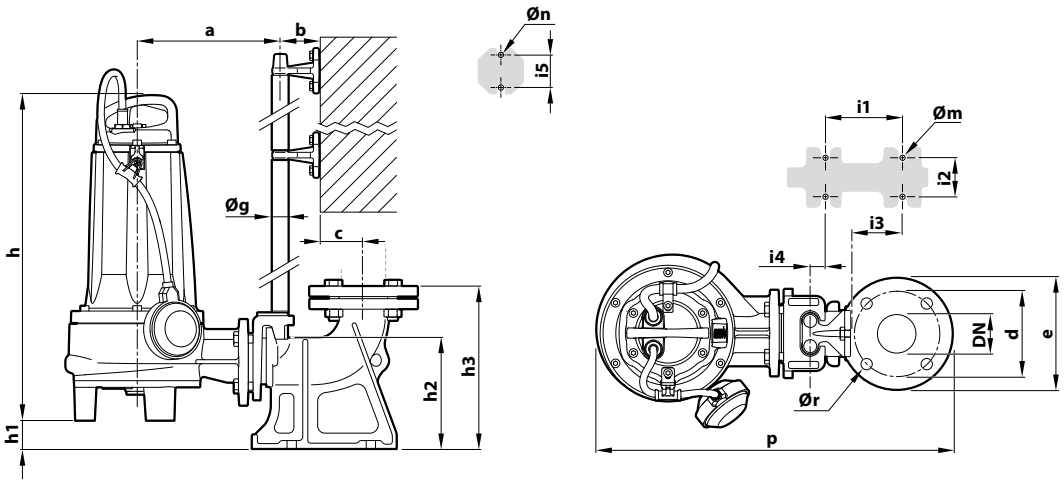

TYPE		PORT	Solid bodies	DIMENSIONS mm																	
Single-ph.	**Three-ph.**	**DN**		a	b	c	d	e	p	h1	h2	h3	i1	i2	i3	i4	i5	Øg	Øm	Øn	Ør
TRm 0.75	**TR 0.75**	**2½"**	**Ø 7 mm**	206	61	51.5	125	165	505	48	163.5	215.5	120	72	62	3	50	3/4	14	11	18
TRm 0.9	**TR 0.9**																				
TRm 1.1	**TR 1.1**																				
TRm 1.3	**TR 1.3**																				
TRm 1.5	**TR 1.5**	**2½"**		211	61	51.5	125	165	514	40	163.5	215.5	120	72	62	3	50	3/4	14	11	18
–	**TR 2.2**																				

SEWAGE LIFTING SYSTEM (TRITUS 2.2 AP - 3 AP - TR3 - TR4)

VERSION WITH HORIZONTAL DELIVERY AND ¾" GUIDE PIPES

For **TR 2.2 AP, 3 AP, 3, 4**	Code ASSPTRITUS61	**DN 2"**

※ Kit consisting of:

Coupling foot

Guide rail

Support for guide tubes

VERSION WITH VERTICAL DELIVERY AND ¾" GUIDE PIPES

For **TR 2.2 AP, 3 AP, 3, 4**	Code ASSPTRITUS61V	**DN 2½"**

※ Kit consisting of:

Coupling foot complete with counterflange

Guide rail

Support for guide tubes

● ACCESSORIES AVAILABLE FOR ORDER

RUNNING GUIDE

※ For TR 2.2 AP, 3 AP, 3, 4	Code ASSFL014

Complete with screws and seals

GUIDE TUBE SUPPORT

※ For Ø ¾ " guide tubes	Code 859SV340INTFA

To ensure stability, insert a support every 2 metres along the guide tube

GUIDE TUBE (AISI 304 stainless steel)

※ 2 metres Ø ¾" guide tube	Code 54SARTG0052F
※ 3 metres Ø ¾" guide tube	Code 54SARTG0053F
※ 6 metres Ø ¾" guide tube	Code 54SARTG0056F

DIMENSIONS (Version with horizontal outlet)

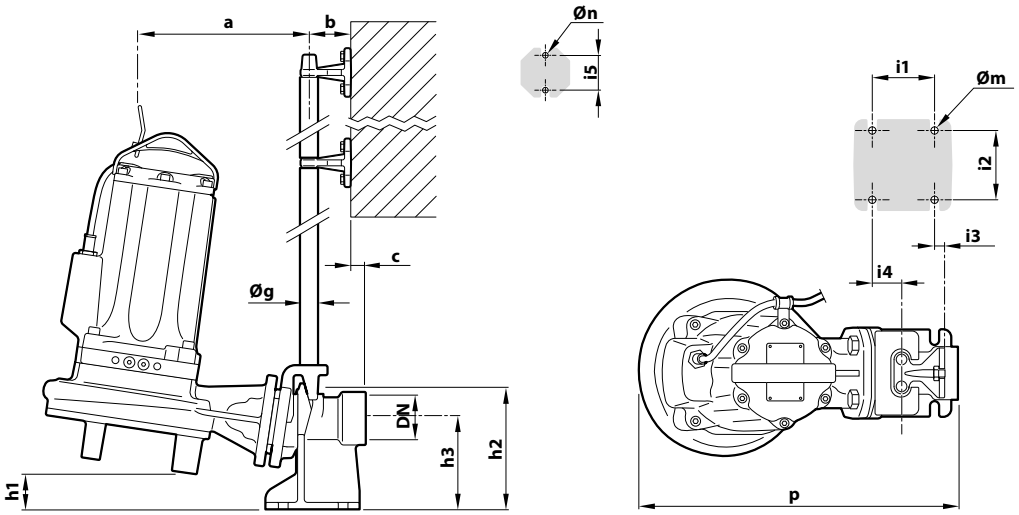

TYPE	PORT DN	Solid bodies	DIMENSIONS mm														
			a	b	c	p	h1	h2	h3	i1	i2	i3	i4	i5	Øg	Øm	Øn
TR 2.2 AP	**2"**	**Ø 7 mm**	228	61	17	455	71	165	130	85	94	16	40	50	3/4	14	11
TR 3 AP			238														
TR 3																	
TR 4																	

DIMENSIONS (Version with vertical delivery)

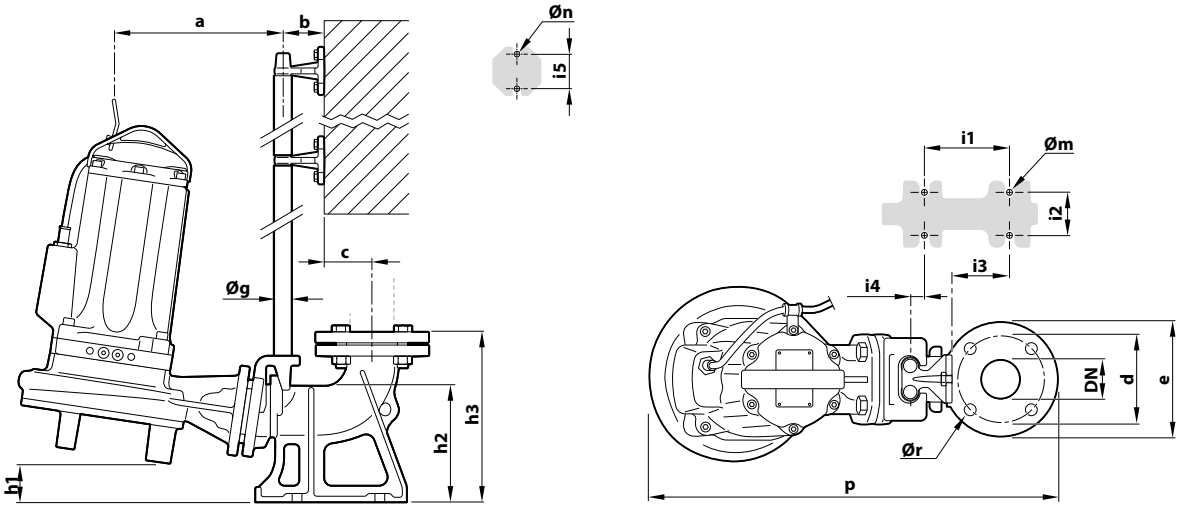

TYPE	PORT DN	Solid bodies	DIMENSIONS mm																	
			a	b	c	d	e	p	h1	h2	h3	i1	i2	i3	i4	i5	Øg	Øm	Øn	Ør
TR 2.2 AP	**2½"**	**Ø 7 mm**	225	61	51.5	125	165	569	69	163.5	215.5	120	72	62	3	50	3/4	14	11	18
TR 3 AP			235																	
TR 3																				
TR 4																				

Sewage
Civil use
Industrial use

※ **High-quality materials and robust construction ensure superior performance and reliability**

PERFORMANCE RANGE

- Flow rate up to **1250 l/min** (75 m^3/h)
- Head up to **20 m**

INSTALLATION AND USE

The **VXC** series is constructed from thick cast iron, offering exceptional robustness, abrasion resistance, and longevity. Featuring **VORTEX**-type impellers, these pumps are designed to drain **sewage, wastewater, sludge-mixed water, activated and putrid sludge**.
They are suitable for a wide range of applications, including sewers, tunnels, excavations, canals, and underground parking facilities

APPLICATION LIMITS

- Depth below water level up to **10 m** (with an appropriately sized power cable)
- Liquid temperature up to **+40 °C**
- Suspended solids transfer:
  – up to **Ø 50 mm** for VXC /50
  – up to **Ø 65 mm** for VXC /65
- **Continuous operation of the pump even when completely uncovered.**

INCLUDES

※ Power cable length **10 m**
※ Float switch (exclusive to single-phase models)
※ Switchbox compatible with single-phase versions

AVAILABLE UPON REQUEST

※ **QES** control panel for three-phase pumps
※ Different voltage requirements 60 Hz frequency

WARRANTY

※ **The warranty for three-phase models remains valid only if the motor's built-in thermal protector is properly connected to the control panel. This connection is essential for the warranty's applicability.**

PATENTS - TRADE MARKS - MODELS

- Patent No. IT0001428923
- Registered Community Model No. 008625685-0001, No. 008625685-0002

CURVES AND PERFORMANCE DATA

50 Hz

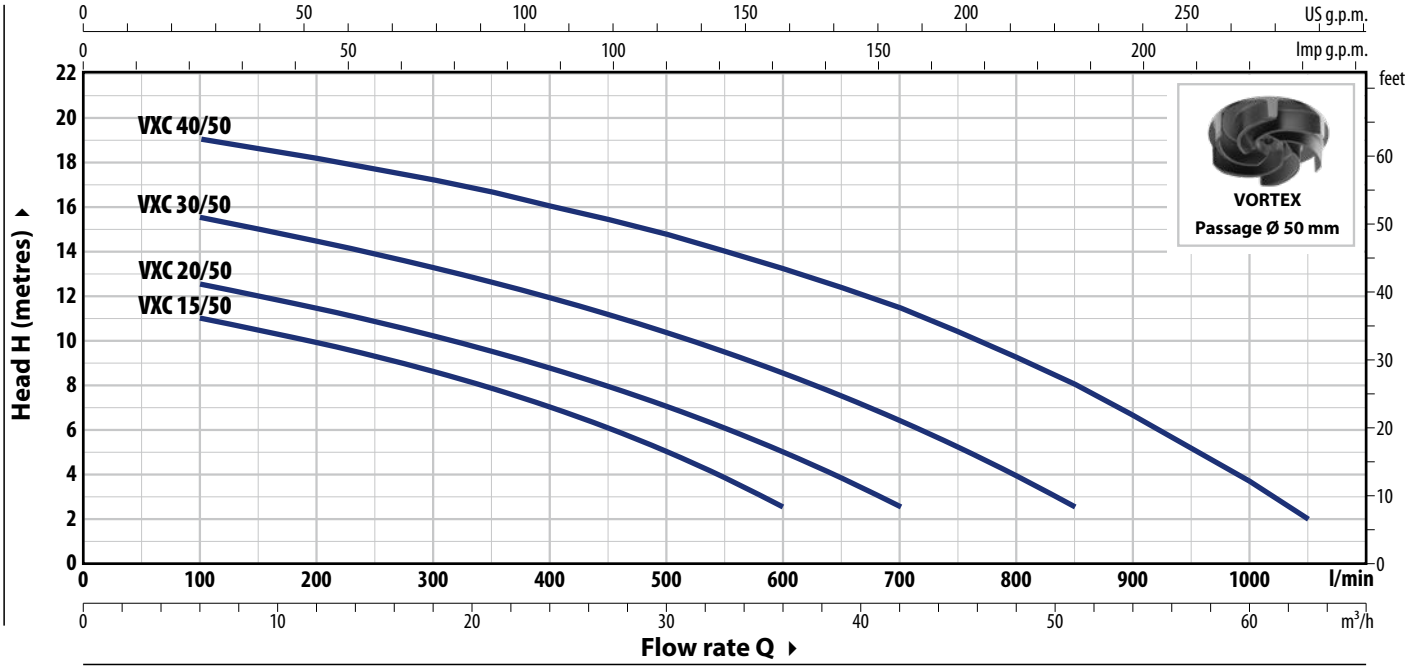

TYPE		POWER (P2)		Q m³/h	0	6	12	18	24	30	36	42	51	60	63
Single-ph.	Three-ph.	kW	HP	Q l/min	**0**	**100**	**200**	**300**	**400**	**500**	**600**	**700**	**850**	**1000**	**1050**
VXCm 15/50	VXC 15/50	1.1	1.5	H metres	12	11	9.9	8.6	7	5	2.5				
VXCm 20/50	VXC 20/50	1.5	2		13.5	12.5	11.4	10.2	8.7	7	5	2.5			
VXCm 30/50	VXC 30/50	2.2	3		16.5	15.5	14.4	13.2	11.9	10.3	8.5	6.4	2.5		
–	VXC 40/50	3	4		20	19	18.1	17.1	16	14.7	13.2	11.4	8	3.6	2

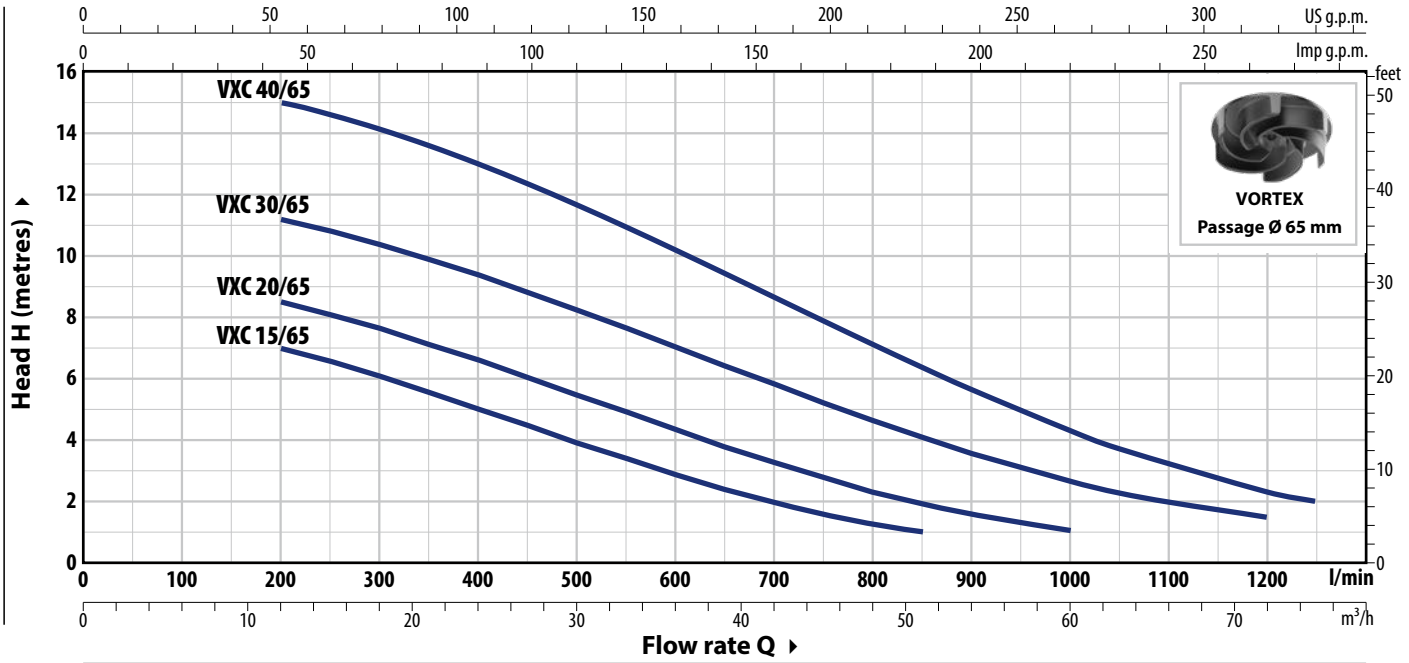

TYPE		POWER (P2)		Q m³/h	0	12	18	24	30	36	42	51	60	63	72	75
Single-ph.	Three-ph.	kW	HP	Q l/min	**0**	**200**	**300**	**400**	**500**	**600**	**700**	**850**	**1000**	**1050**	**1200**	**1250**
VXCm 15/65	VXC 15/65	1.1	1.5	H metres	8	7	6	5	4	2.8	2	1				
VXCm 20/65	VXC 20/65	1.5	2		9.5	8.5	7.6	6.6	5.4	4.3	3.3	2	1			
VXCm 30/65	VXC 30/65	2.2	3		12	11	10.3	9.3	8.2	7	5.8	4	2.6	2.3	1.5	
–	VXC 40/65	3	4		15.5	15	14	13	11.6	10	8.6	6.3	4.3	3.7	2.3	2

Q = Flow rate **H** = Total manometric head

Performance curves comply with EN ISO 9906 Grade 3B tolerance limits.

ABSORPTION

TYPE	VOLTAGE
Single-phase	**230 V**
VXCm 15/50	8.5 A
VXCm 20/50	9.0 A
VXCm 30/50	12.0 A
VXCm 15/65	8.5 A
VXCm 20/65	9.0 A
VXCm 30/65	12.0 A

TYPE	VOLTAGE
Three-phase	**400 V**
VXC 15/50	3.4 A
VXC 20/50	3.7 A
VXC 30/50	5.0 A
VXC 40/50	6.2 A
VXC 15/65	3.4 A
VXC 20/65	3.7 A
VXC 30/65	5.0 A
VXC 40/65	6.2 A

DIMENSIONS AND WEIGHT

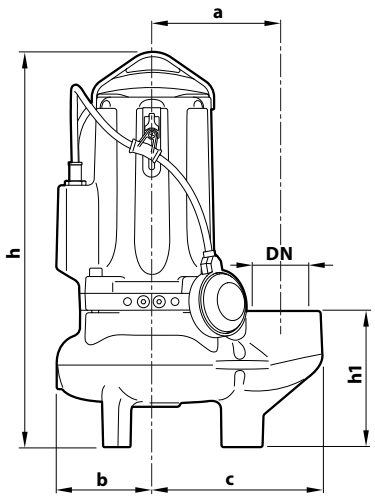

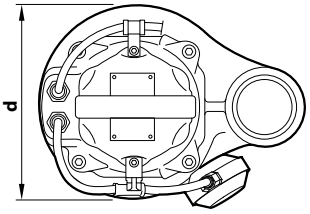

Typical installation

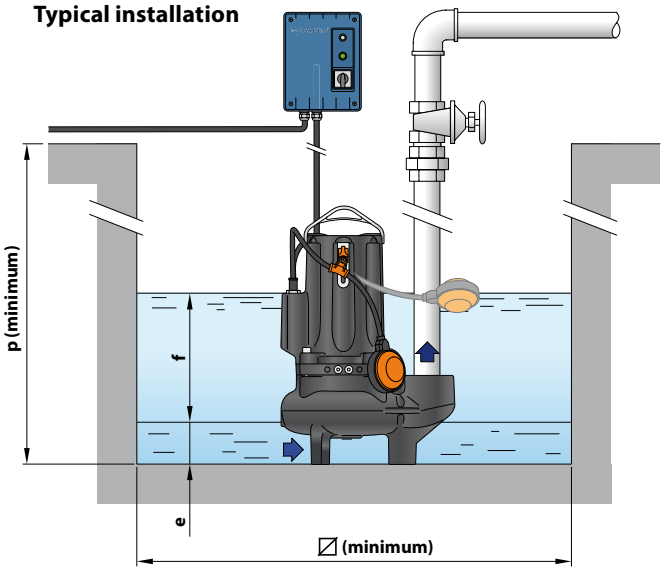

TYPE		PORT	Passage of solid bodies	DIMENSIONS mm										kg	
Single-phase	**Three-phase**	**DN**		a	b	c	h	h1	d	e	f	p	⧄	1~	3~
VXCm 15/50	**VXC 15/50**	**2½"**	**50 mm**	162	119	212	487	167	242	75	adjustable	800	800	42.1	40.0
VXCm 20/50	**VXC 20/50**													43.0	42.0
VXCm 30/50	**VXC 30/50**						513 | 487							48.0	44.0
–	**VXC 40/50**						513							–	48.0
VXCm 15/65	**VXC 15/65**	**3"**	**65 mm**	180	120	240	521	201	246	85				44.0	42.5
VXCm 20/65	**VXC 20/65**													45.1	44.0
VXCm 30/65	**VXC 30/65**						547 | 521							49.8	46.0
–	**VXC 40/65**						547							–	49.8

PALLET CAPACITY

TYPE		NO. OF PUMPS
Single-phase	**Three-phase**	
VXCm 15/50	**VXC 15/50**	16
VXCm 20/50	**VXC 20/50**	16
VXCm 30/50	**VXC 30/50**	12 | 16
–	**VXC 40/50**	12
VXCm 15/65	**VXC 15/65**	12
VXCm 20/65	**VXC 20/65**	12
VXCm 30/65	**VXC 30/65**	12
–	**VXC 40/65**	12

MATERIALS AND COMPONENTS

1	**Pump body**	Cast iron with cataphoresis treatment
2	**Impeller**	Cast iron VORTEX type with cataphoresis treatment
3	**Motor holder**	Cast iron with cataphoresis treatment
4	**Motor bracket**	Cast iron with cataphoresis treatment
5	**Motor shaft**	Stainless steel **AISI 431**

6 Double mechanical seal with interposed oil chamber

Seal	Shaft	Location	Materials
STA-22	Ø 22 mm	Motor side	Ceramic / Graphite / NBR
STA-20	Ø 20 mm	Pump side	Silicon carbide/Silicon carbide/NBR

7 Electric Motor

VXCm: single-phase 230 V - 50 Hz with thermal motor protection

VXC: three-phase 400 V - 50 Hz
※ with winding integrated thermal motor protection (to be connected to the control panel supplied on request)

– Insulation: class F
– Protection rating: IP X8

8 Power cord

※ 10 metres 'H07 RN-F' type

9 Control panel
(exclusive to single-phase models)

With capacitor and manual reset motor protection switch

10 Float switch
(exclusive to single-phase models)

Control panel
(standard for single-phase versions)

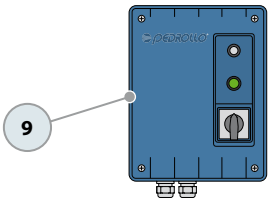

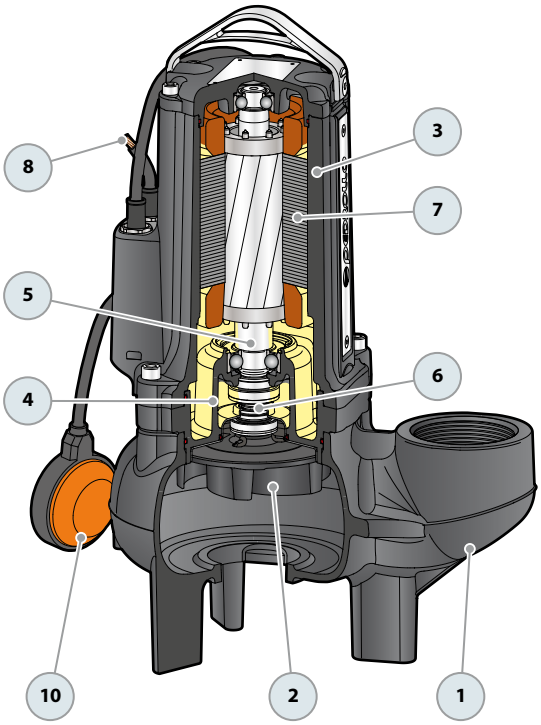

OPTIONAL - Support base
(Cod. ASSBAVM)

Sewage
Civil use
Industrial use

※ **High-quality materials and robust construction ensure superior performance and reliability**

PERFORMANCE RANGE

- Flow rate up to **1600 l/min** (96 m^3/h)
- Head up to **25 m**

INSTALLATION AND USE

The **MC** deries is constructed from thick cast iron, offering exceptional robustness, abrasion resistance, and longevity. Featuring **TWO-CHANNEL** impellers, these pumps are designed to drain liquids containing suspended solids and short fibers, as well as **sewage, wastewater, sludge-mixed water, activated and putrid sludge**.
They are suitable for a wide range of applications, including sewers, tunnels, excavations, canals, and underground parking facilities

APPLICATION LIMITS

- Depth below water level up to **10 m** (with an appropriately sized power cable)
- Liquid temperature up to **+40 °C**
- Suspended solids transfer:
  – up to **Ø 50 mm** for MC /50
  – up to **Ø 65 mm** for MC /65
- **Minimum immersion for continuous service:**
  – 320 mm for MC /50
  – 360 mm for MC /65

INCLUDES

※ Power cable length **10 m**
※ Float switch (exclusive to single-phase models)
※ Switchbox compatible with single-phase versions

AVAILABLE UPON REQUEST

※ **QES** control panel for three-phase pumps
※ Different voltage requirements 60 Hz frequency

WARRANTY

※ **The warranty for three-phase models remains valid only if the motor's built-in thermal protector is properly connected to the control panel. This connection is essential for the warranty's applicability.**

PATENTS - TRADE MARKS - MODELS

- Patent No. IT0001428923
- Registered Community Model No. 008625685-0001, No. 008625685-0002

CURVES AND PERFORMANCE DATA

50 Hz

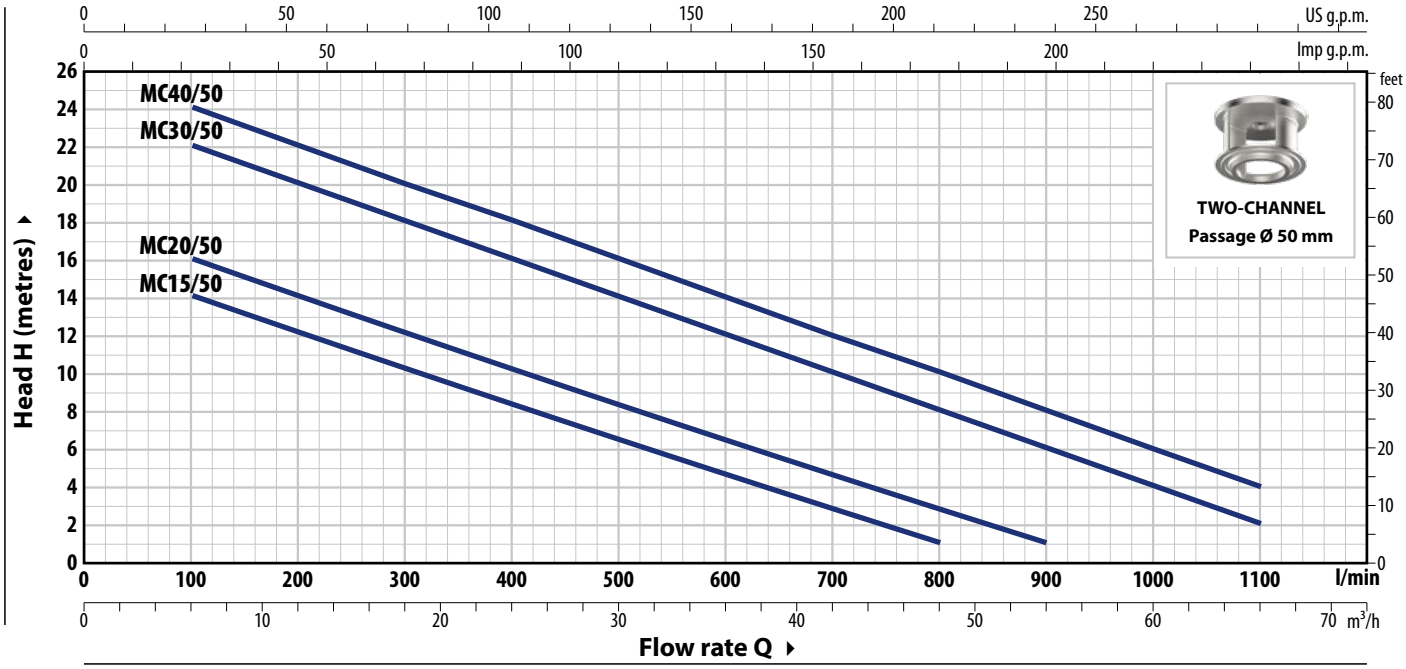

TYPE		POWER (P2)		Q m³/h	0	6	12	18	24	30	36	42	48	54	60	66
Single-ph.	**Three-ph.**	**kW**	**HP**	Q l/min	**0**	**100**	**200**	**300**	**400**	**500**	**600**	**700**	**800**	**900**	**1000**	**1100**
MCm 15/50	**MC 15/50**	1.1	1.5	**H** metres	16	14	12.5	10.5	8.5	6.5	4.5	3	1			
MCm 20/50	**MC 20/50**	1.5	2		18	16	14	12.5	10.5	8.5	6.5	5	3	1		
MCm 30/50	**MC 30/50**	2.2	3		24	22	20	18	16	14	12	10	8	6	4	2
–	**MC 40/50**	3	4		25	24	22	20	18	16	14	12	10	8	6	4

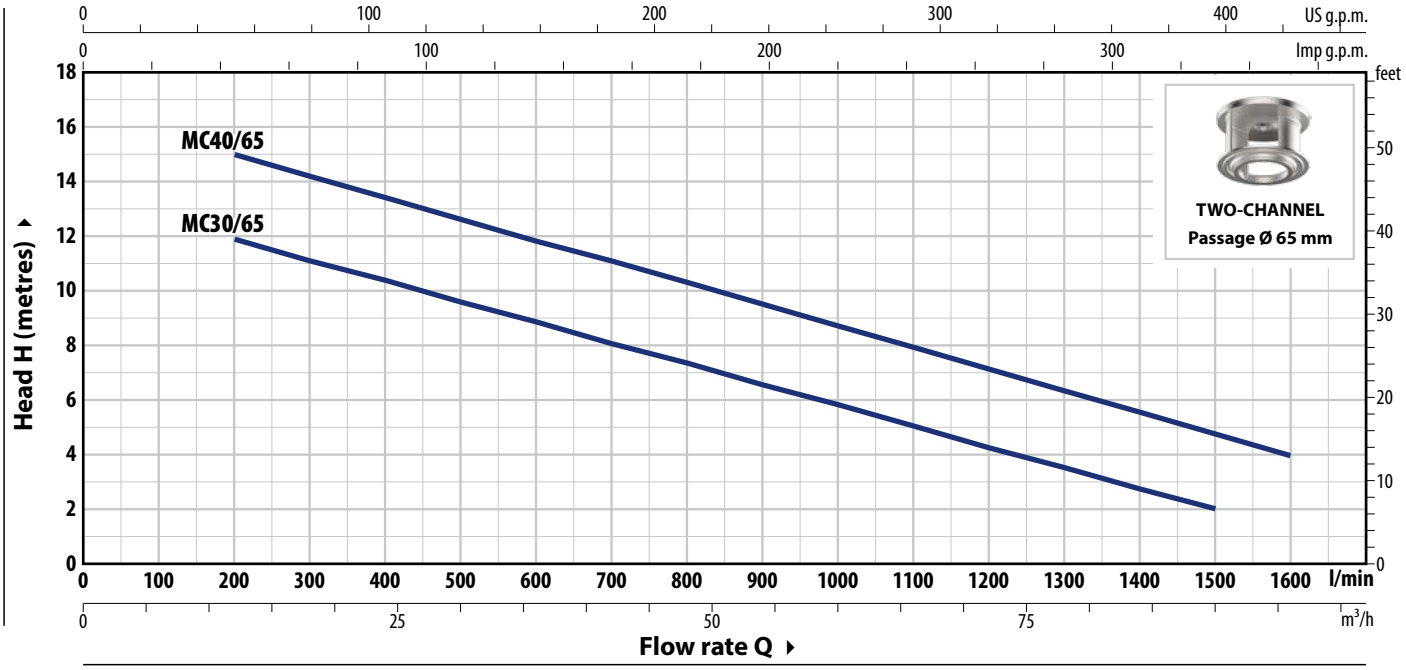

TYPE		POWER (P2)		Q m³/h	0	12	24	36	48	54	60	66	72	90	96
Single-ph.	**Three-ph.**	**kW**	**HP**	Q l/min	**0**	**200**	**400**	**600**	**800**	**900**	**1000**	**1100**	**1200**	**1500**	**1600**
MCm 30/65	**MC 30/65**	2.2	3	**H** metres	13	12	10.5	9	7.5	6.5	6	5	4.5	2	
–	**MC 40/65**	3	4		17	15	13.5	12	10.5	9.5	8.5	8	7	4.8	4

Q = Flow rate **H** = Total manometric head

Performance curves comply with EN ISO 9906 Grade 3B tolerance limits.

ABSORPTION

TYPE **Single-phase**	VOLTAGE **230 V**
MCm 15/50	10.5 A
MCm 20/50	14.0 A
MCm 30/50	18.0 A
MCm 30/65	14.0 A

TYPE **Three-phase**	VOLTAGE **400 V**
MC 15/50	4.5 A
MC 20/50	5.0 A
MC 30/50	6.5 A
MC 40/50	7.0 A
MC 30/65	6.5 A
MC 40/65	7.5 A

DIMENSIONS AND WEIGHT

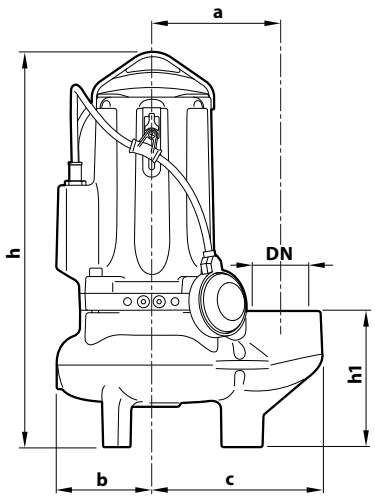

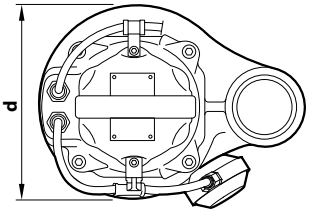

Typical installation

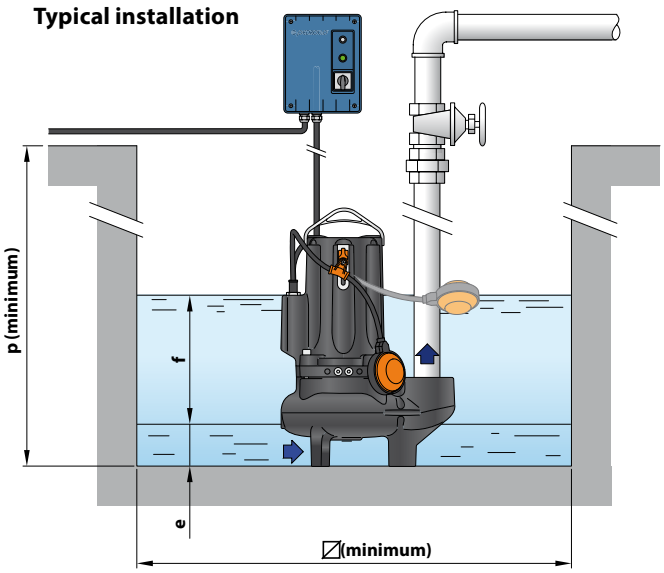

TYPE **Single-phase**	TYPE **Three-phase**	PORT **DN**	Passage of solid bodies	DIMENSIONS mm a	b	c	h	h1	d	e	f	p	⌀	kg 1~	3~
MCm 15/50	**MC 15/50**	**2½"**	**50 mm**	162	119	212	487	167	242	75	adjustable	800	800	42.0	40.0
MCm 20/50	**MC 20/50**													43.0	41.9
MCm 30/50	**MC 30/50**						513 | 487						47.8	44.0
–	**MC 40/50**						513							–	47.8
MCm 30/65	**MC 30/65**	**3"**	**65 mm**	180	120	240	547 | 521	201	246	85				50.0	46.0
–	**MC 40/65**						547							–	49.8

PALLET CAPACITY

TYPE **Single-phase**	TYPE **Three-phase**	NO. OF PUMPS
MCm 15/50	**MC 15/50**	16
MCm 20/50	**MC 20/50**	16
MCm 30/50	**MC 30/50**	12 | 16
–	**MC 40/50**	12
MCm 30/65	**MC 30/65**	12
–	**MC 40/65**	12

MATERIALS AND COMPONENTS

1	**Pump body**	Cast iron with cataphoresis treatment
2	**Impeller**	TWO-CHANNEL type in micro-cast **AISI 304** stainless steel
3	**Motor holder**	Cast iron with cataphoresis treatment
4	**Motor bracket**	Cast iron with cataphoresis treatment
5	**Motor shaft**	Stainless steel **AISI 431**

6 Double mechanical seal with interposed oil chamber

Seal	Shaft	Location	Materials
STA-22	Ø 22 mm	Motor side	Ceramic / Graphite / NBR
STA-20	Ø 20 mm	Pump side	Silicon carbide/Silicon carbide/NBR

7 Electric Motor

MCm: single-phase 230 V - 50 Hz with thermal motor protection

MC: three-phase 400 V - 50 Hz
※ with winding integrated thermal motor protection (to be connected to the control panel supplied on request)

– Insulation: class F
– Protection rating: IP X8

8 Power cord
※ 10 metres 'H07 RN-F' type

9 Switchbox compatible with MCm 15-20-30
(exclusive to single-phase models)

With capacitor and manual reset motor protection switch

10 Float switch
(exclusive to single-phase models)

Control panel
(standard for single-phase versions)

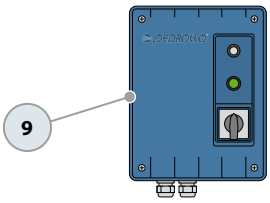

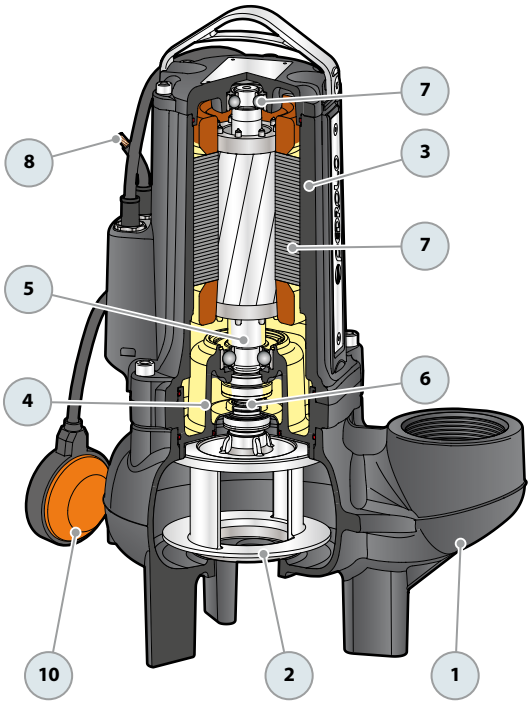

OPTIONAL - Support base
(Cod. ASSBAVM)

Sewage
Civil use
Industrial use

※ **High quality materials and robustness assure superior performance and reliability**

PERFORMANCE RANGE

- Flow rate up to **1250 l/min** (75 m^3/h)
- Head up to **20 m**

INSTALLATION AND USE

The **VXC-F** series is constructed from thick cast iron, offering exceptional robustness, abrasion resistance, and longevity.
Featuring VORTEX-type impellers, these pumps are designed to drain **wastewater, sludge-mixed water, liquids with air or gas, as well as activated and putrid sludge**.
Recommended for stationary installation in sewers, tunnels, shafts, underground parking facilities, and specialized manholes.

APPLICATION LIMITS

- Depth below water level up to **10 m** (with an appropriately sized power cable)
- Liquid temperature up to **+40 °C**
- Suspended solids transfer:
  – up to **Ø 50 mm** for **VXC /50-F**
  – up to **Ø 65 mm** for **VXC /65-F**
- **Continuous operation of the pump even when completely uncovered.**

INCLUDES

※ Power cable length **10 m**
※ Float switch (exclusive to single-phase models)
※ Switchbox compatible with single-phase versions

AVAILABLE UPON REQUEST

※ Coupling foot kit
※ **QES** control panel for three-phase pumps
※ Different voltage requirements 60 Hz frequency

WARRANTY

※ **The warranty for three-phase models remains valid only if the motor's built-in thermal protector is properly connected to the control panel. This connection is essential for the warranty's applicability.**

PATENTS - TRADE MARKS - MODELS

- Patent No. IT0001428923

CURVES AND PERFORMANCE DATA

50 Hz

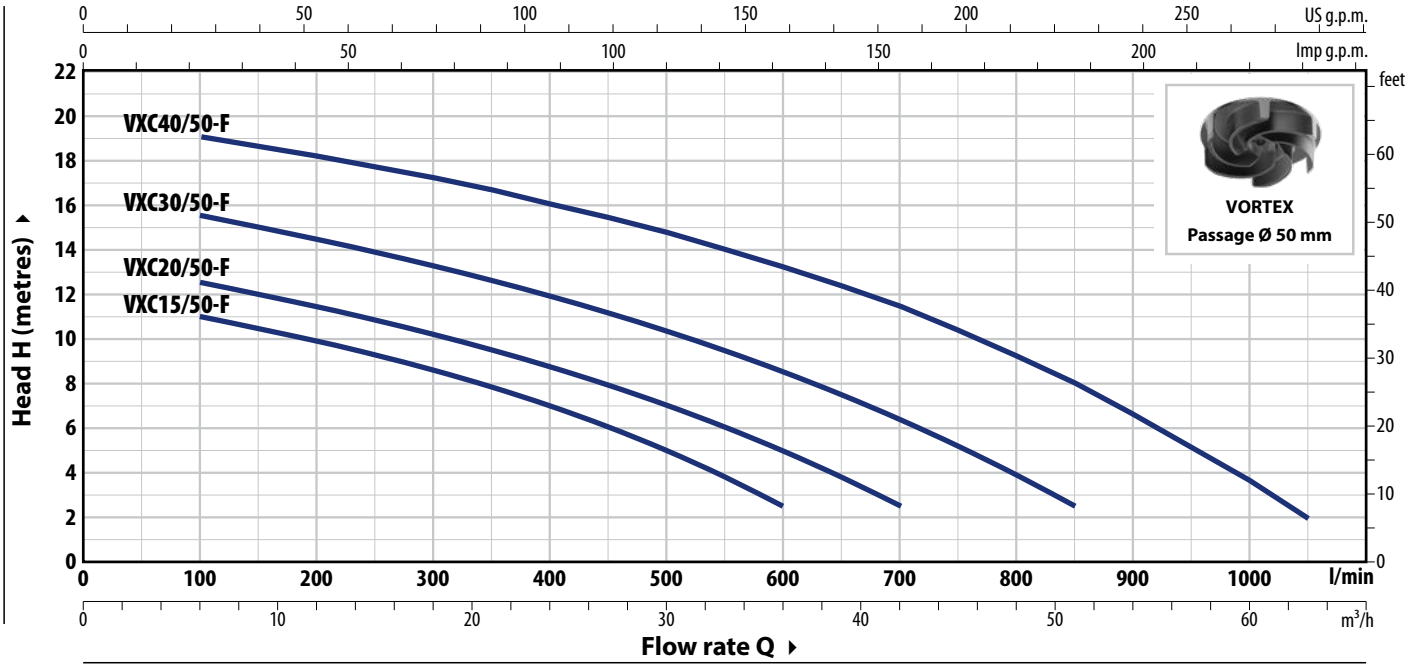

TYPE		POWER (P2)		Q m³/h	0	6	12	18	24	30	36	42	51	60	63
Single-phase	**Three-phase**	**kW**	**HP**	l/min	**0**	**100**	**200**	**300**	**400**	**500**	**600**	**700**	**850**	**1000**	**1050**
VXCm 15/50-F	**VXC 15/50-F**	1.1	1.5	**H** metres	12	11	10	8.6	7	5	2.5				
VXCm 20/50-F	**VXC 20/50-F**	1.5	2		13.5	12.5	11.4	10.2	8.7	7	5	2.5			
VXCm 30/50-F	**VXC 30/50-F**	2.2	3		16.5	15.5	14.4	13.2	12	10.3	8.5	6.4	2.5		
–	**VXC 40/50-F**	3	4		20	19	18	17	16	14.7	13.2	11.4	8	3.6	2

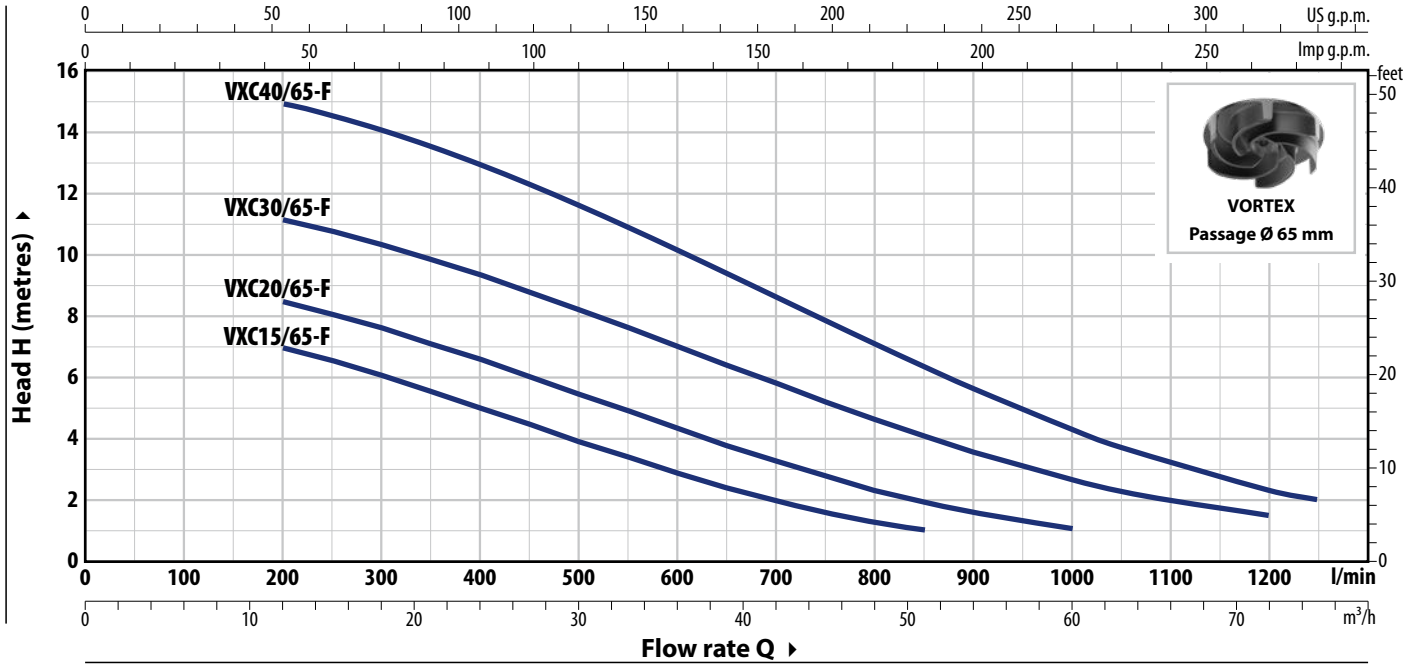

TYPE		POWER (P2)		Q m³/h	0	12	24	36	42	51	60	63	72	75
Single-phase	**Three-phase**	**kW**	**HP**	l/min	**0**	**200**	**400**	**600**	**700**	**850**	**1000**	**1050**	**1200**	**1250**
VXCm 15/65-F	**VXC 15/65-F**	1.1	1.5	**H** metres	8	7	5	2.8	2	1				
VXCm 20/65-F	**VXC 20/65-F**	1.5	2		9.5	8.5	6.6	4.3	3.3	2	1			
VXCm 30/65-F	**VXC 30/65-F**	2.2	3		12	11	9.3	7	5.8	4	2.6	2.3	1.5	
–	**VXC 40/65-F**	3	4		15.5	15	13	10	8.6	6.3	4.3	3.7	2.3	2

Q = Flow rate **H** = Total manometric head

Performance curves comply with EN ISO 9906 Grade 3B tolerance limits.

ABSORPTION

TYPE **Single-phase**	VOLTAGE **230 V**
VXCm 15/50-F	8.5 A
VXCm 20/50-F	9.0 A
VXCm 30/50-F	12.0 A
VXCm 15/65-F	8.5 A
VXCm 20/65-F	9.0 A
VXCm 30/65-F	12.0 A

TYPE **Three-phase**	VOLTAGE **400 V**
VXC 15/50-F	3.4 A
VXC 20/50-F	3.7 A
VXC 30/50-F	5.0 A
VXC 40/50-F	6.2 A
VXC 15/65-F	3.4 A
VXC 20/65-F	3.7 A
VXC 30/65-F	5.0 A
VXC 40/65-F	6.2 A

DIMENSIONS AND WEIGHT

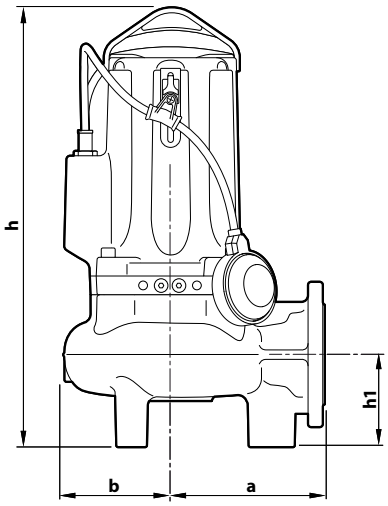

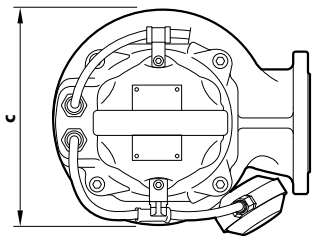

TYPE		Passage of solid bodies	DIMENSIONS mm					kg	
Single-phase	**Three-phase**		a	b	c	h	h1	1~	3~
VXCm 15/50-F	**VXC 15/50-F**	**50 mm**	170	119	242	487	102	43.6	42.0
VXCm 20/50-F	**VXC 20/50-F**							44.6	43.3
VXCm 30/50-F	**VXC 30/50-F**					513 | 487		49.5	45.5
–	**VXC 40/50-F**					513		–	50.0
VXCm 15/65-F	**VXC 15/65-F**	**65 mm**	210	120	246	521	123	46.0	44.7
VXCm 20/65-F	**VXC 20/65-F**							47.1	46.0
VXCm 30/65-F	**VXC 30/65-F**					547 | 521		51.8	48.0
–	**VXC 40/65-F**					547		–	51.8

PORT FLANGE

TYPE	FLANGE	F	K	D	L	HOLES	
			mm	mm	mm	N°	Ø (mm)
VXC /50-F	**DN65** (PN10)	**2½"**	145	185	160	4	18
VXC /65-F	**DN80** (PN10)	**3"**	160	200	180	8	18

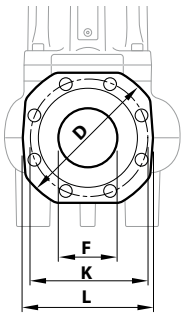

MATERIALS AND COMPONENTS

1	**Pump body**	Cast iron with cataphoresis treatment with flanged and threaded ISO 228/1 port
2	**Impeller**	Cast iron VORTEX type with cataphoresis treatment
3	**Motor holder**	Cast iron with cataphoresis treatment
4	**Motor bracket**	Cast iron with cataphoresis treatment
5	**Motor shaft**	Stainless steel **AISI 431**

6 Double mechanical seal with interposed oil chamber

Seal	Shaft	Location	Materials
STA-22	Ø 22 mm	Motor side	Ceramic / Graphite / NBR
STA-20	Ø 20 mm	Pump side	Silicon carbide/Silicon carbide/NBR

7 Electric Motor

VXCm-F: single-phase 230 V - 50 Hz
with thermal motor protection

VXC-F: three-phase 400 V - 50 Hz
※ with winding integrated thermal motor protection (to be connected to the control panel supplied on request)

– Insulation: class F
– Protection rating: IP X8

8 Power cord

※ 10 metres 'H07 RN-F' type

9 Control panel
(exclusive to single-phase models)

With capacitor and manual reset motor protection switch

10 Float switch
(exclusive to single-phase models)

Control panel
(standard for single-phase versions)

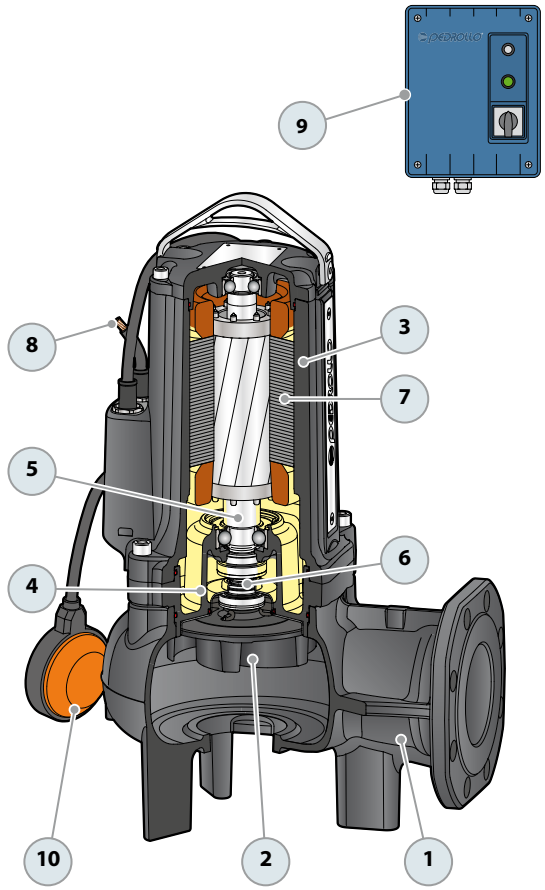

OPTIONAL - Support base
(Cod. ASSBAVM)

MC-F Flanged submersible pumps TWO-CHANNEL

Sewage
Civil use
Industrial use

※ High quality materials and robustness assure superior performance and reliability

PERFORMANCE RANGE

- Flow rate up to **1600 l/min** (96 m^3/h)
- Head up to **25 m**

INSTALLATION AND USE

The **MC-F** series is constructed from thick cast iron, offering exceptional robustness, abrasion resistance, and longevity. Featuring **TWO-CHANNEL** impellers, these pumps are designed to drain liquids containing suspended solids and short fibers, as well as wastewater, **sewage, sludge-mixed water, groundwater, and surface water** in various settings including apartment buildings, public facilities, industrial sites, parking facilities, and washing areas.

APPLICATION LIMITS

- Depth below water level up to **10 m** (with an appropriately sized power cable)
- Liquid temperature up to **+40 °C**
- Suspended solids transfer:
  – up to **Ø 50 mm** for **MC /50-F**
  – up to **Ø 65 mm** for **MC /65-F**
- **Minimum immersion for continuous service:**
  – 320 mm for MC /50
  – 360 mm for MC /65

INCLUDES

※ Power cable length **10 m**
※ Float switch (exclusive to single-phase models)
※ Switchbox compatible with single-phase versions

AVAILABLE UPON REQUEST

※ Coupling foot kit
※ **QES** control panel for three-phase pumps
※ Different voltage requirements 60 Hz frequency

WARRANTY

※ **The warranty for three-phase models remains valid only if the motor's built-in thermal protector is properly connected to the control panel. This connection is essential for the warranty's applicability.**

PATENTS - TRADE MARKS - MODELS

- Patent No. IT0001428923

CURVES AND PERFORMANCE DATA

50 Hz

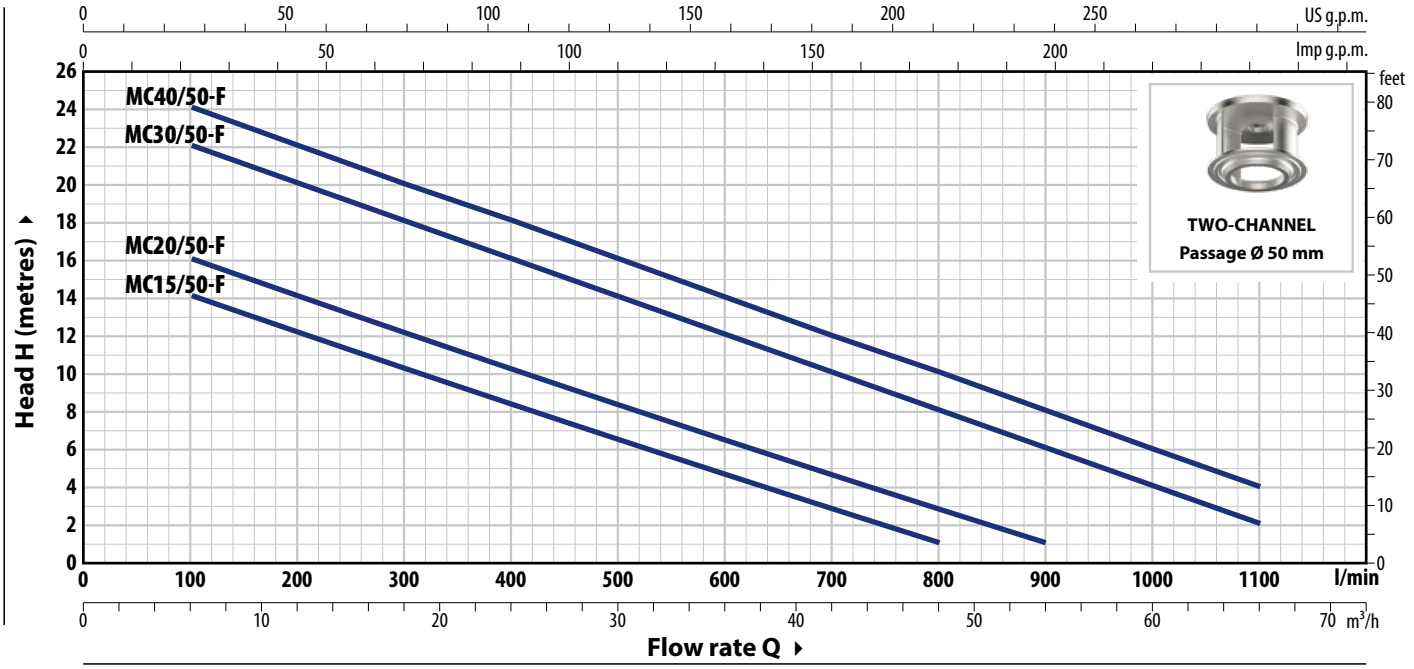

TYPE		POWER (P2)		Q m³/h	0	6	12	18	24	30	36	42	48	54	60	66
Single-phase	**Three-phase**	**kW**	**HP**	Q l/min	**0**	**100**	**200**	**300**	**400**	**500**	**600**	**700**	**800**	**900**	**1000**	**1100**
MCm 15/50-F	**MC 15/50-F**	1.1	1.5		16	14	12.5	10.5	8.5	6.5	4.5	3	1			
MCm 20/50-F	**MC 20/50-F**	1.5	2		18	16	14	12.5	10.5	8.5	6.5	5	3	1		
MCm 30/50-F	**MC 30/50-F**	2.2	3	**H** metres	24	22	20	18	16	14	12	10	8	6	4	2
–	**MC 40/50-F**	3	4		25	24	22	20	18	16	14	12	10	8	6	4

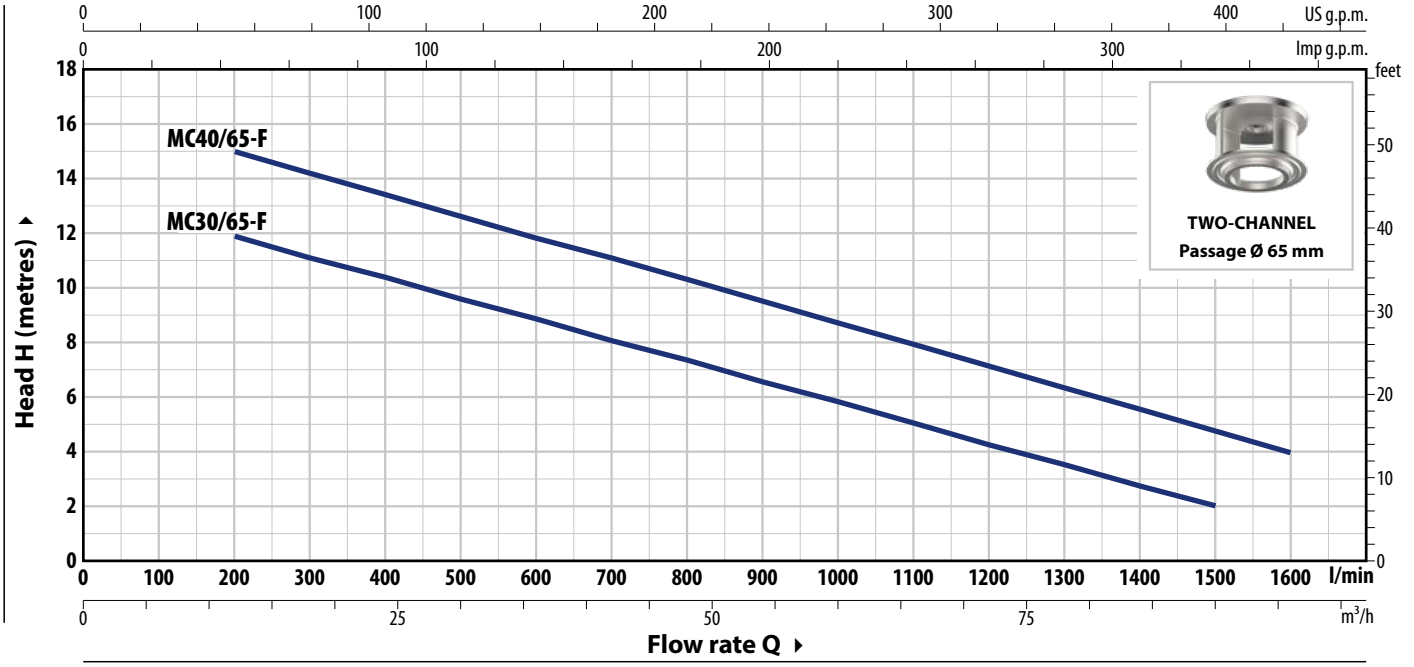

TYPE		POWER (P2)		Q m³/h	0	12	24	36	48	60	66	72	90	96
Single-phase	**Three-phase**	**kW**	**HP**	Q l/min	**0**	**200**	**400**	**600**	**800**	**1000**	**1100**	**1200**	**1500**	**1600**
MCm 30/65-F	**MC 30/65-F**	2.2	3	**H** metres	13	12	10.5	9	7.5	6	5	4.5	2	
–	**MC 40/65-F**	3	4		17	15	13.5	12	10.5	8.5	8	7	4.8	4

Q = Flow rate **H** = Total manometric head

Performance curves comply with EN ISO 9906 Grade 3B tolerance limits.

ABSORPTION

TYPE **Single-phase**	VOLTAGE **230 V**
MCm 15/50-F	10.5 A
MCm 20/50-F	14.0 A
MCm 30/50-F	18.0 A
MCm 30/65-F	14.0 A

TYPE **Three-phase**	VOLTAGE **400 V**
MC 15/50-F	4.5 A
MC 20/50-F	5.0 A
MC 30/50-F	6.5 A
MC 40/50-F	7.0 A
MC 30/65-F	6.5 A
MC 40/65-F	7.5 A

DIMENSIONS AND WEIGHT

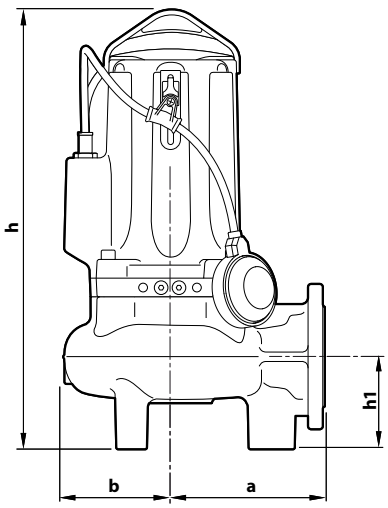

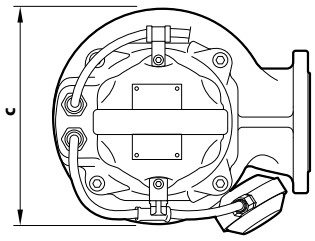

TYPE		Passage of solid bodies	DIMENSIONS mm					kg	
Single-phase	**Three-phase**		a	b	c	h	h1	1~	3~
MCm 15/50-F	**MC 15/50-F**	**50 mm**	170	119	242	487	102	43.6	42.0
MCm 20/50-F	**MC 20/50-F**							44.6	43.5
MCm 30/50-F	**MC 30/50-F**					513 | 487		50.0	45.5
–	**MC 40/50-F**					513		–	49.8
MCm 30/65-F	**MC 30/65-F**	**65 mm**	210	120	246	547 | 521	123	51.8	48.0
–	**MC 40/65-F**					547		–	52.8

PORT FLANGE

TYPE	FLANGE	F	K	D	L	HOLES	
			mm	mm	mm	N°	Ø (mm)
MC /50-F	**DN65** (PN10)	**2½"**	145	185	160	4	18
MC /65-F	**DN80** (PN10)	**3"**	160	200	180	8	18

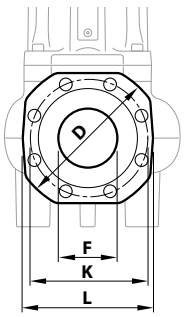

MATERIALS AND COMPONENTS

1	**Pump body**	Cast iron with cataphoresis treatment with flanged and threaded ISO 228/1 port
2	**Impeller**	TWO-CHANNEL type in micro-cast **AISI 304** stainless steel
3	**Motor holder**	Cast iron with cataphoresis treatment
4	**Motor bracket**	Cast iron with cataphoresis treatment
5	**Motor shaft**	Stainless steel **AISI 431**

6 Double mechanical seal with interposed oil chamber

Seal	Shaft	Location	Materials
STA-22	Ø 22 mm	Motor side	Ceramic / Graphite / NBR
STA-20	Ø 20 mm	Pump side	Silicon carbide/Silicon carbide/NBR

7 Electric Motor

MCm-F: single-phase 230 V - 50 Hz
with thermal motor protection

MC-F: three-phase 400 V - 50 Hz
※ with winding integrated thermal motor protection (to be connected to the control panel supplied on request)

– Insulation: class F
– Protection rating: IP X8

8 Power cord
※ 10 metres 'H07 RN-F' type

9 Control panel
(exclusive to single-phase models)

With capacitor and manual reset motor protection switch

10 Float switch
(exclusive to single-phase models)

Control panel
(standard for single-phase versions)

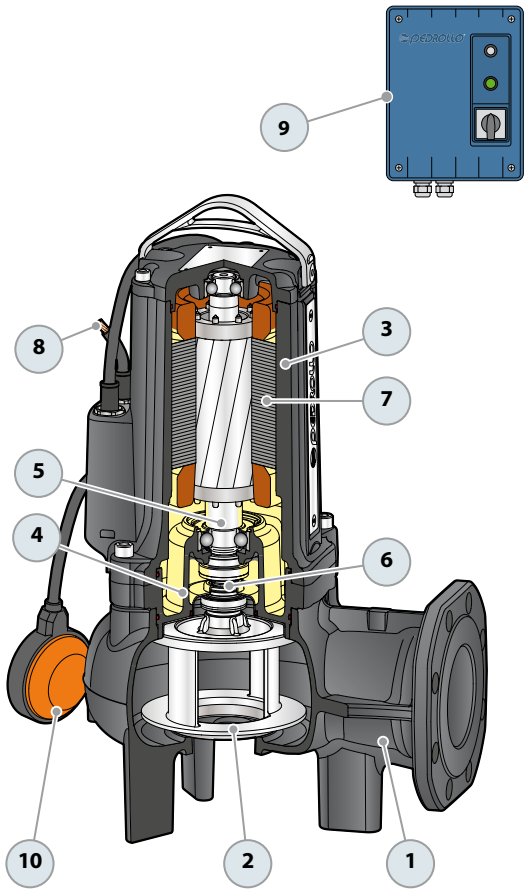

OPTIONAL - Support base
(Cod. ASSBAVM)

VERSION WITH HORIZONTAL DELIVERY AND ¾" GUIDE PIPES

For **VXC /50-F, MC /50-F**	Code ASSVXCF051	**DN 2"**

※ **Kit consisting of:**

Coupling foot

Slide rail with screws and gasket

Support for guide tubes

VERSION WITH VERTICAL DELIVERY AND ¾" GUIDE PIPES

For **VXC /50-F, MC /50-F**	Code ASSVXCF051V	**DN 2½"**
For **VXC /65-F, MC /65-F**	Code ASSVXCF071V	**DN 3"**

VERSION WITH VERTICAL DELIVERY AND 2" GUIDE TUBES

For **VXC /50-F, MC /50-F**	Code ASSVXCF0704V	**DN 3"**
For **VXC /65-F, MC /65-F**	Code ASSVXCF0705V	

※ **Kit consisting of:**

Coupling foot complete with counterflange

Slide rail with screws and gasket

Support for guide tubes

● ACCESSORIES AVAILABLE FOR ORDER

RUNNING GUIDE

※ For VXC /50-F, MC /50-F with guide tubes Ø ¾".	Code ASSFL0017
※ For VXC /65-F, MC /65-F with guide tubes Ø ¾".	Code ASSFL0018
※ For VXC /50-F, MC /50-F with guide tubes Ø 2".	Code ASSFL071
※ For VXC /65-F, MC /65-F with guide tubes Ø 2".	Code ASSFL072

Complete with screws and seals

for Ø ¾" guide tubes

for guide tubes Ø 2"

INTERMEDIATE GUIDE TUBE SUPPORT

※ For Ø ¾" guide tubes	Code 859SV340INTFA
※ For guide tubes Ø 2"	Code 859SV349INTFA

For reasons of stability, interpose a support:
– every 2 metres with ¾ " guide pipes (mandatory)
– every 3 metres with 2" guide tubes (recommended)

for Ø ¾" guide tubes

for guide tubes Ø 2"

GUIDE TUBE (AISI 304 stainless steel)

※ 2 metres Ø ¾" guide tube	Code 54SARTG0052F
※ 3 metres Ø ¾" guide tube	Code 54SARTG0053F
※ 6 metres Ø ¾" guide tube	Code 54SARTG0056F
※ 3 metres Ø 2" guide tube	Code 54SARTG0063F
※ 6 metres guide tube Ø 2"	Code 54SARTG0066F

DIMENSIONS (Version with horizontal outlet)

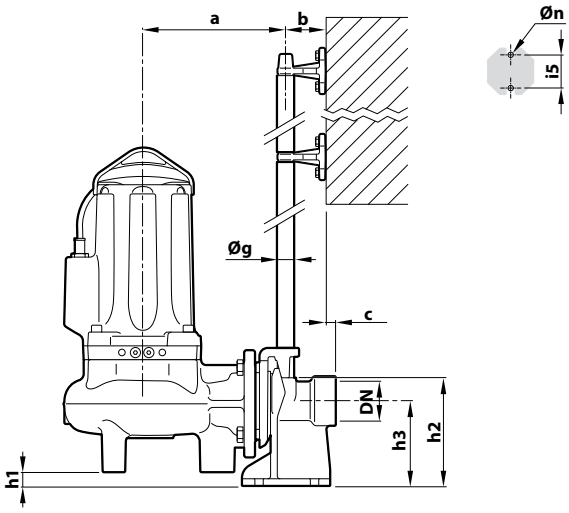

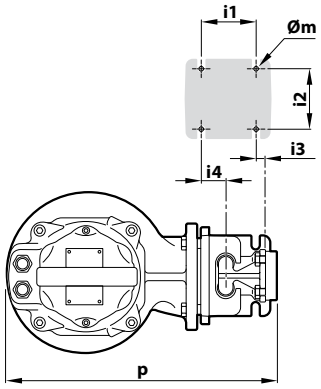

TYPE	Solid bodies mm	PORT DN	DIMENSIONS mm														
			a	b	c	p	h1	h2	h3	i1	i2	i3	i4	i5	Øg	Øm	Øn
VXC /50 -F MC /50 -F	Ø 50	2"	216	61	17	412	28	165	130	85	94	16	40	50	¾"	12	11

DIMENSIONS (Version with vertical delivery)

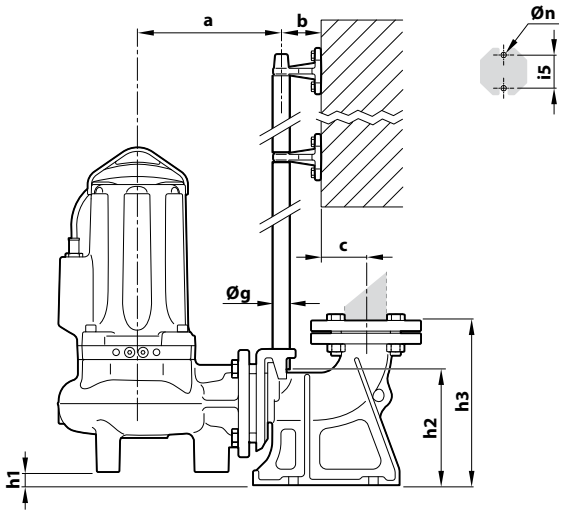

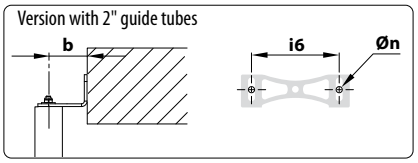

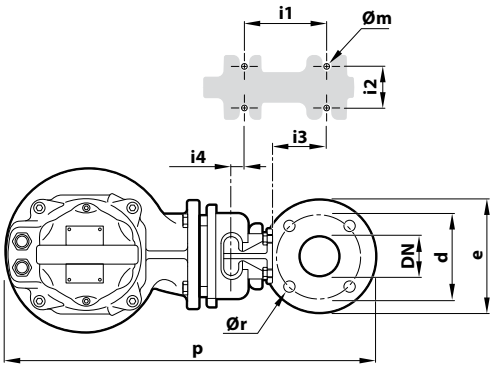

Version with ¾" guide tubes

TYPE	Solid bodies mm	PORT DN	DIMENSIONS mm																	
			a	b	c	d	e	p	h1	h2	h3	i1	i2	i3	i4	i5	Øg	Øm	Øn	Ør
VXC /50 -F MC /50 -F	Ø 50 mm	2½"	213	61	52	125	165	526	25.5	164	215	120	72	62	3	50	¾"	14	11	18
VXC /65 -F MC /65 -F	Ø 65 mm	3" (PN6)	253	61	69	150	190	598	46	216	279	130	112	84	15	50	¾"	14	11	18

Version with 2" guide tubes

TYPE	Solid bodies mm	PORT DN	DIMENSIONS mm																		
			a	b	c	d	e	p	h1	h2	h3	i1	i2	i3	i4	i5	i6	Øg	Øm	Øn	Ør
VXC /50 -F MC /50 -F	Ø 50 mm	3" (PN10)	320	85	95	160	200	718	105	265	392	250	150	35	-130	–	187	2"	22	13.5	18
VXC /65 -F MC /65 -F	Ø 65 mm	3" (PN10)	359	85	95	160	200	760	84	256	392	250	150	35	-130	–	187	2"	22	13.5	18

Sewage
Civil use
Industrial use

※ **Advanced design and high-quality materials assure long-term performance and reliability**

PERFORMANCE RANGE

- Flow rate up to **1800 l/min** (108 m³/h)
- Head up to **26 m**

INSTALLATION AND USE

The **VX** series is constructed from thick stainless steel and cast iron, offering exceptional robustness, abrasion resistance, and durability. The pumps feature **VORTEX**-type impellers, renowned for their reliable operation and minimal risk of clogging.
Recommended for various applications including sewage with suspended solids, wastewater, rainwater, city sewage, and industrial wastewater.
They are suitable for a wide range of applications, including sewers, tunnels, excavations, canals, and underground parking facilities.

ELECTRIC MOTOR

※ **The electric motor is safeguarded by a special three-phase thermal protector, situated within the motor, which activates in case of overheating or abnormal power consumption.**

INCLUDES

※ Power cable length **10 m**

APPLICATION LIMITS

- Depth below water level up to **10 m** (with an appropriately sized power cable)
- Liquid temperature up to **+40 °C**
- Suspended solids transfer:
  – up to **Ø 50 mm** for VX/50
  – up to **Ø 65 mm** for VX/65
  – up to **Ø 80 mm** for VX/80
- **Minimum immersion for continuous service: 500 mm**

AVAILABLE UPON REQUEST

※ Different voltage requirements 60 Hz frequency

PATENTS - TRADE MARKS - MODELS

- Registered Community Model No. 003863158-0002

CURVES AND PERFORMANCE DATA

50 Hz

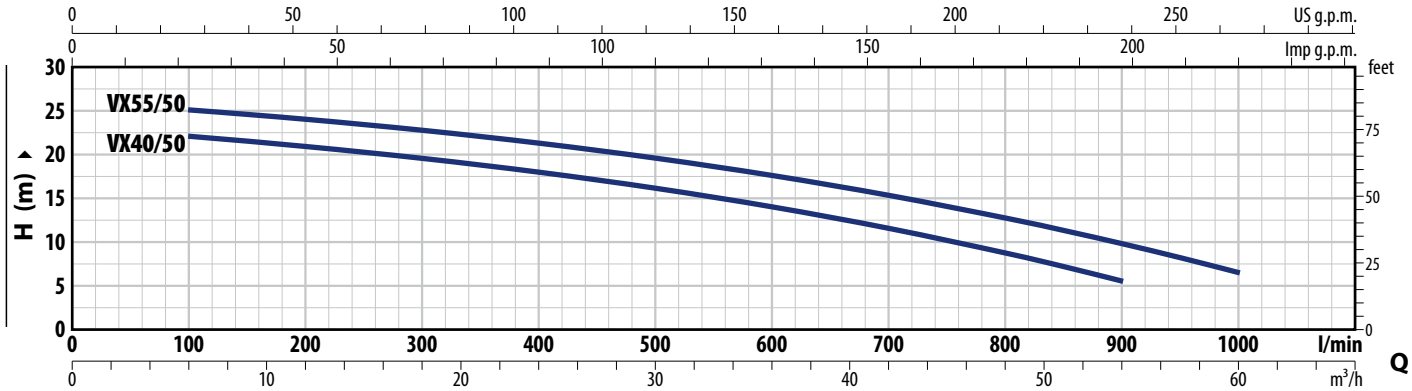

TYPE Three-phase	POWER (P2) kW	HP	Q m³/h / l/min	0 / 0	6 / 100	12 / 200	18 / 300	24 / 400	30 / 500	36 / 600	42 / 700	48 / 800	54 / 900	60 / 1000
VX 40/50	3	4	H metres	23	22	20.8	19.5	18	16	14	11.5	8.7	5.5	
VX 55/50	4	5.5		26	25	24	22.7	21.2	19.5	17.5	15.3	12.7	9.8	6.5

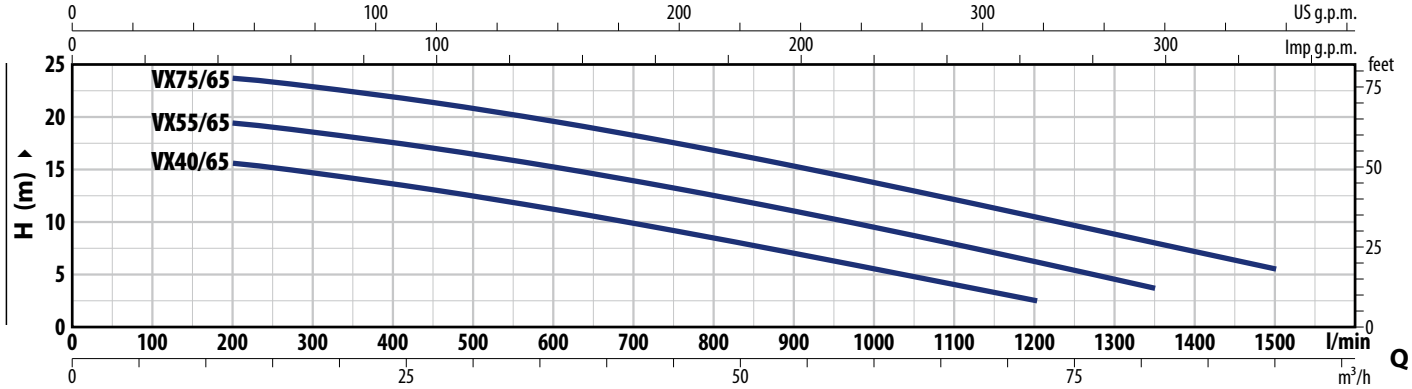

TYPE Three-phase	POWER (P2) kW	HP	Q m³/h / l/min	0 / 0	12 / 200	18 / 300	27 / 450	36 / 600	45 / 750	54 / 900	63 / 1050	72 / 1200	81 / 1350	90 / 1500
VX 40/65	3	4		17	15.6	14.7	13	11.2	9.2	7	4.8	2.5		
VX 55/65	4	5.5	H metres	20.7	19.4	18.5	17	15.2	13.2	11	8.7	6.2	3.7	
VX 75/65	5.5	7.5		24.8	23.6	23	21.4	19.6	17.5	15.2	13	10.5	8	5.5

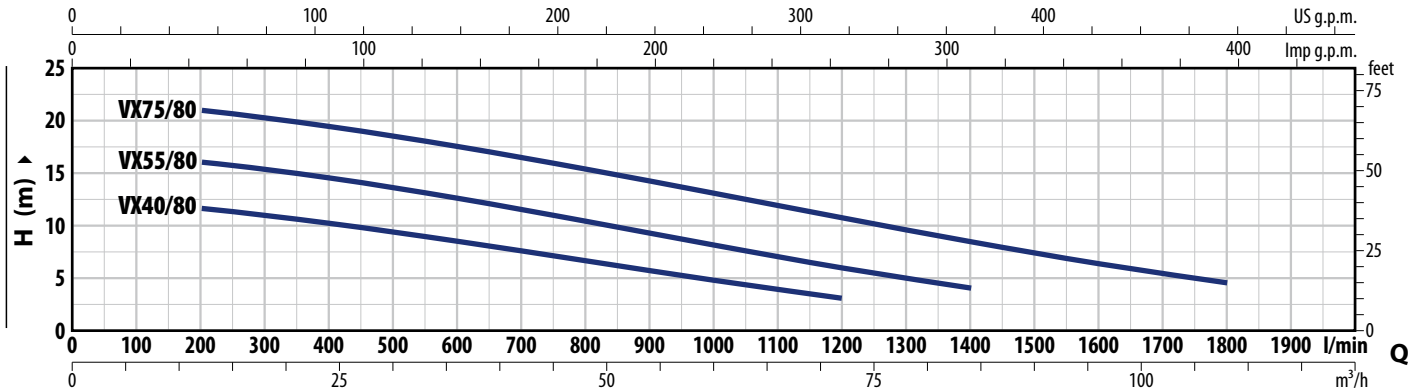

TYPE Three-phase	POWER (P2) kW	HP	Q m³/h / l/min	0 / 0	12 / 200	24 / 400	36 / 600	48 / 800	60 / 1000	72 / 1200	84 / 1400	96 / 1600	108 / 1800
VX 40/80	3	4		12.5	11.5	10.2	8.5	6.7	5	3			
VX 55/80	4	5.5	H metres	16.5	16	14.4	12.5	10.3	8	6	4		
VX 75/80	5.5	7.5		22	21	19.2	17.4	15.2	13	10.7	8.4	6.4	4.5

Q = Flow rate **H** = Total manometric head

Performance curves comply with EN ISO 9906 Grade 3B tolerance limits.

ABSORPTION

TYPE **Three-phase**	VOLTAGE **400 V**
VX 40/50	5.8 A
VX 55/50	7.0 A
VX 40/65	6.2 A
VX 55/65	7.7 A
VX 75/65	12.7 A

TYPE **Three-phase**	VOLTAGE **400 V**
VX 40/80	6.0 A
VX 55/80	8.5 A
VX 75/80	13.5 A

DIMENSIONS AND WEIGHT

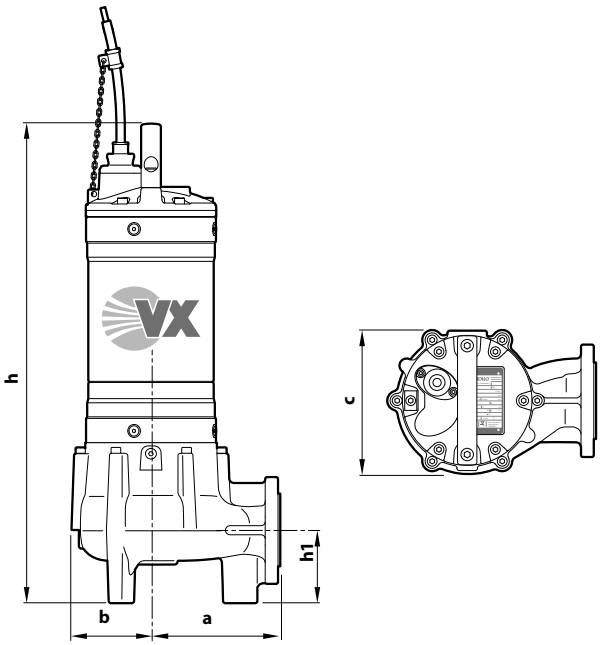

Typical installation

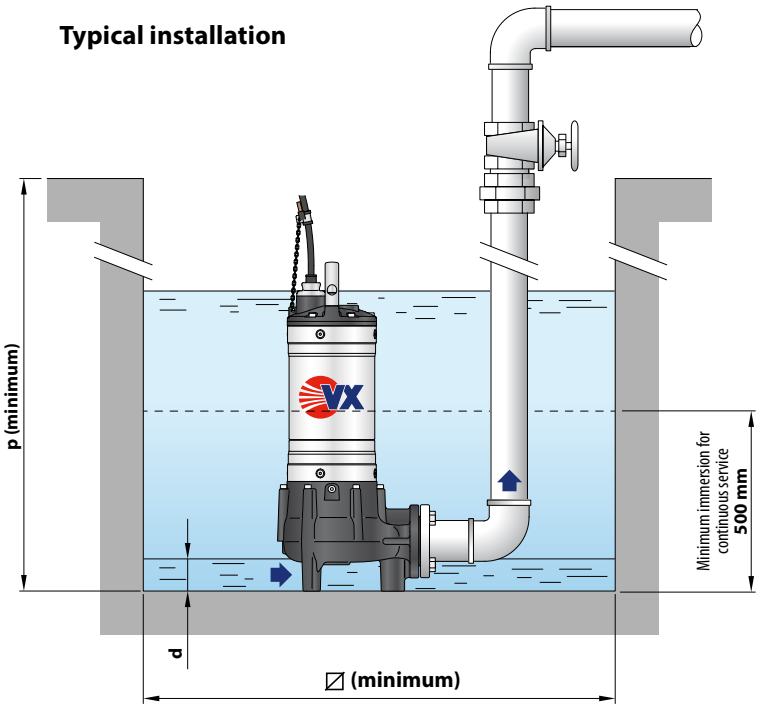

TYPE **Three-phase**	Passage of solid bodies	DIMENSIONS mm a	b	c	h	h1	d	p	⧄	kg 3~
VX 40/50	**Ø 50 mm**	170	106	193	602	100	55	700	500	50.0
VX 55/50					642					59.0
VX 40/65	**Ø 65 mm**	170	107	196	630	121	70	800	500	54.0
VX 55/65					670					60.0
VX 75/65					700					67.0
VX 40/80	**Ø 80 mm**	178	107	210	655	150	85	800	500	54.8
VX 55/80					695					60.0
VX 75/80					725					68.0

PORT FLANGE

TYPE **Three-phase**	FLANGE **DN**	F	K mm	D mm	HOLES N°	Ø (mm)
VX 40/50	**50** (PN10)	2"	125	150	4	18
VX 55/50						
VX 40/65	**65** (PN10)	2½"	145	185	8	18
VX 55/65						
VX 75/65						
VX 40/80	**80** (PN10)	3"	160	200	8	18
VX 55/80						
VX 75/80						

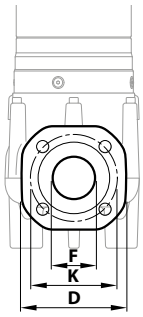

PALLET CAPACITY

TYPE **Three-phase**	NO. OF PUMPS
VX 40/50	10
VX 55/50	12
VX 40/65	12
VX 55/65	12
VX 75/65	12
VX 40/80	12
VX 55/80	12
VX 75/80	12

MATERIALS AND COMPONENTS

1	**Pump body**	Cast iron with cataphoresis treatment
2	**Impeller**	Cast iron VORTEX type with cataphoresis treatment
3	**Motor sleeve**	Stainless steel **AISI 304**
4	**Motor cover**	Cast iron with cataphoresis treatment
5	**Motor shaft**	Stainless steel **AISI 431**

6 Double mechanical seal with interposed oil chamber

Water pump	Seal	Shaft	Location	Materials
VX 50	**ED560-25**	Ø 25 mm	Motor side	Silicon carbide / Graphite / NBR
			Pump side	Silicon carbide/Silicon carbide/NBR
VX 65-80	**AR-27**	Ø 27 mm	Motor side	Silicon carbide / Graphite / NBR
	AR-25	Ø 25 mm	Pump side	Silicon carbide/Silicon carbide/NBR

7 Electric Motor

Three-phase 400 V - 50Hz
with winding integrated thermal motor protection

– Insulation: class F
– Protection rating: IP X8

8 Power cord

※ 10 metres 'H07 RN-F' type

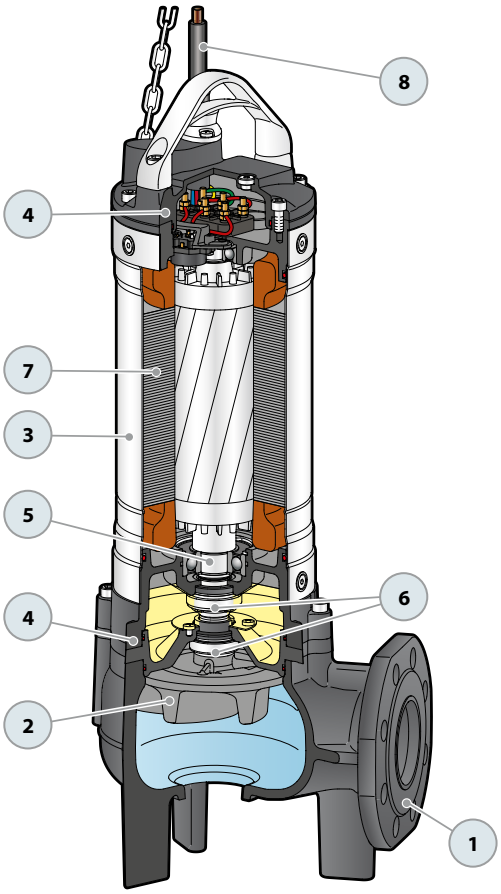

Sewage
Civil use
Industrial use

※ **Advanced design and high-quality materials assure long-term performance and reliability**

PERFORMANCE RANGE

- Flow rate up to **2300 l/min** (138 m³/h)
- Head up to **31 m**

INSTALLATION AND USE

The **BC** series is constructed from thick stainless steel and cast iron, offering exceptional robustness, abrasion resistance, and durability. Equipped with **TWO-CHANNEL** impellers, the pumps are designed to drain **sewage, sludge-mixed water, and activated and putrid sludge**.
They are suitable for a wide range of applications, including sewers, tunnels, excavations, canals, and underground parking facilities.

ELECTRIC MOTOR

※ **The electric motor is safeguarded by a special three-phase thermal protector, situated within the motor, which activates in case of overheating or abnormal power consumption.**

INCLUDES

※ Power cable length **10 m**

APPLICATION LIMITS

- Depth below water level up to **10 m** (with an appropriately sized power cable)
- Liquid temperature up to **+40 °C**
- Suspended solids transfer:
  – up to **Ø 35 mm** for BC/35
  – up to **Ø 50 mm** for BC/50
- **Minimum immersion for continuous service: 500 mm**

AVAILABLE UPON REQUEST

※ Different voltage requirements 60 Hz frequency

PATENTS - TRADE MARKS - MODELS

- Registered Community Model No. 003863158-0001

CURVES AND PERFORMANCE DATA

50 Hz

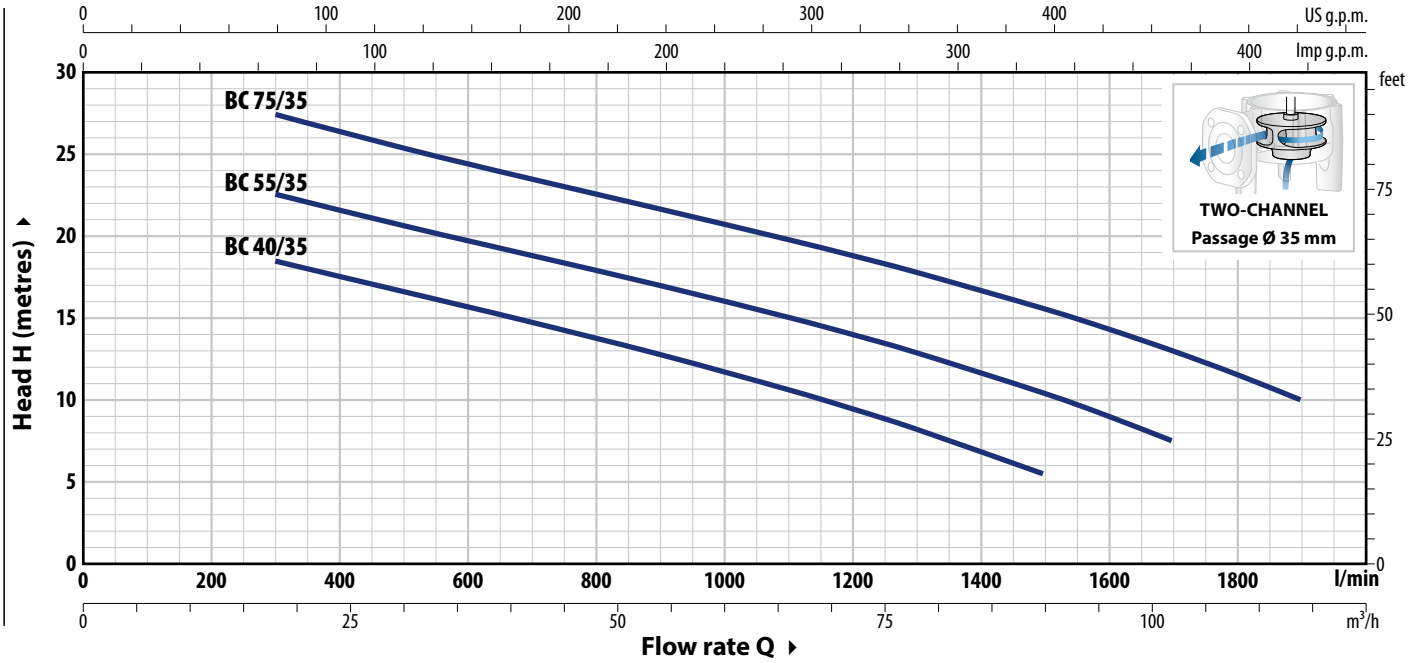

TYPE	POWER (P2)		Q m³/h	0	18	30	42	54	66	78	90	102	114
Three-phase	kW	HP	Q l/min	**0**	**300**	**500**	**700**	**900**	**1100**	**1300**	**1500**	**1700**	**1900**
BC 40/35	3	4		21.4	18.5	16.6	14.7	12.8	10.6	8.2	5.5		
BC 55/35	4	5.5	H metres	25.8	22.5	20.6	18.8	17	15	13	10.4	7.5	
BC 75/35	5.5	7.5		31	27.5	25.4	23.5	21.6	19.8	17.8	15.6	13	10

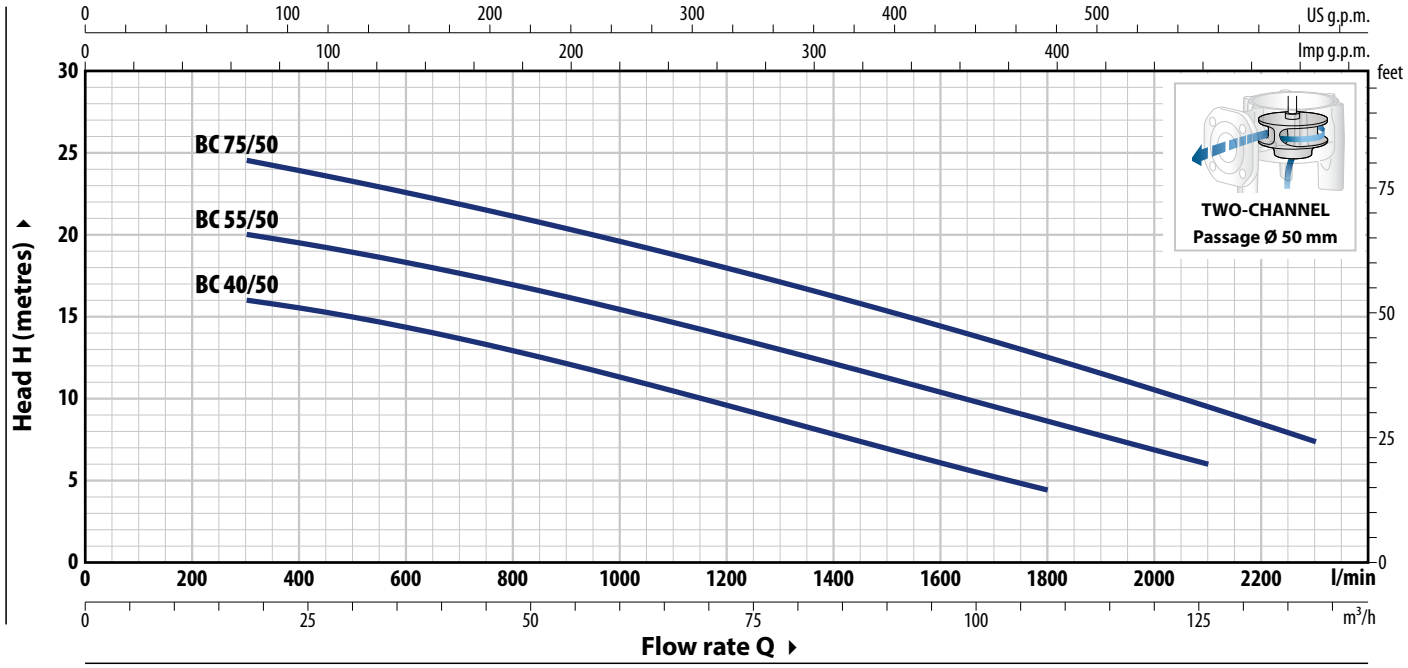

TYPE	POWER (P2)		Q m³/h	0	18	30	45	60	75	90	108	126	138
Three-phase	kW	HP	Q l/min	**0**	**300**	**500**	**750**	**1000**	**1250**	**1500**	**1800**	**2100**	**2300**
BC 40/50	3	4		16.5	16	14.8	13	11	9	6.8	4.5		
BC 55/50	4	5.5	H metres	21.5	20	19	17.5	15.6	13.5	11.3	8.7	6	
BC 75/50	5.5	7.5		26.5	24.5	23.2	21.5	19.6	17.5	15.3	12.4	9.4	7.5

Q = Flow rate **H** = Total manometric head

Performance curves comply with EN ISO 9906 Grade 3B tolerance limits.

ABSORPTION

TYPE **Three-phase**	VOLTAGE **400 V**
BC 40/35	6.2 A
BC 55/35	8.3 A
BC 75/35	13.5 A

TYPE **Three-phase**	VOLTAGE **400 V**
BC 40/50	7.0 A
BC 55/50	9.0 A
BC 75/50	13.5 A

DIMENSIONS AND WEIGHT

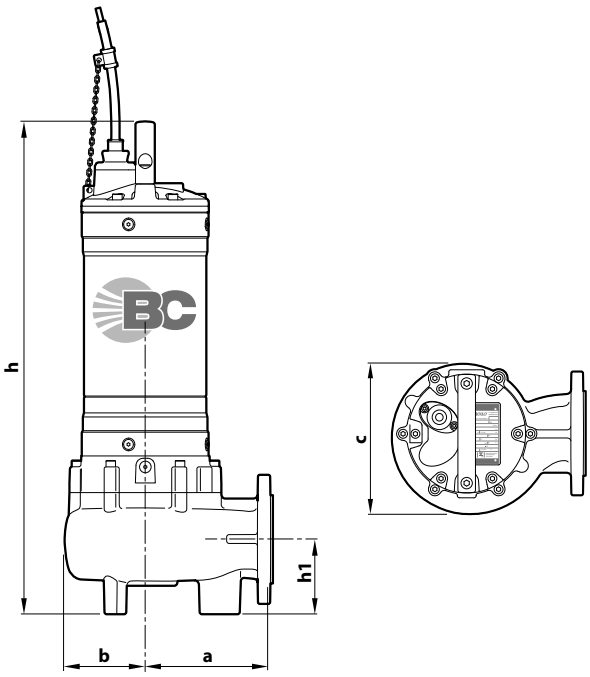

Typical installation

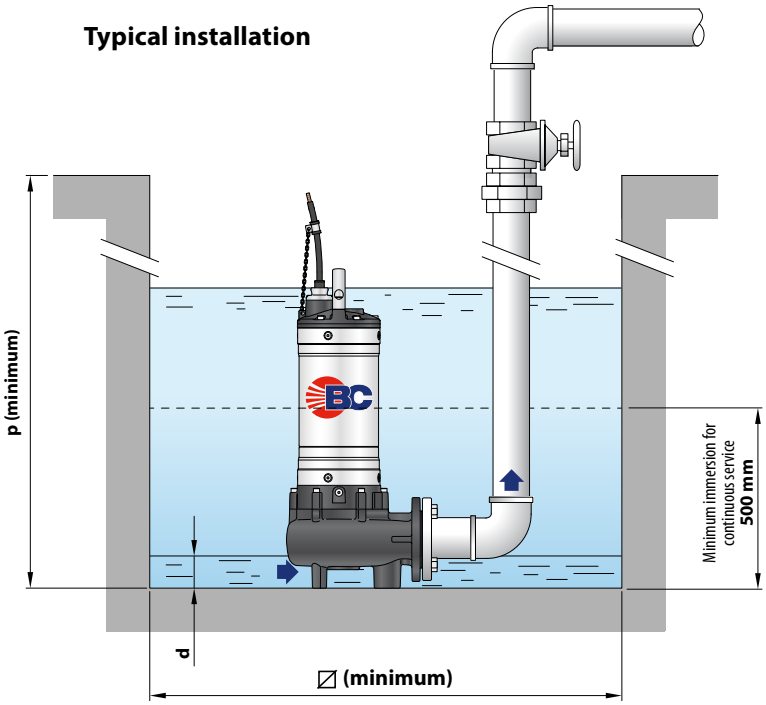

TYPE **Three-phase**	Passage of solid bodies	DIMENSIONS mm a	b	c	h	h1	d	p	⧄	3~
BC 40/35					595					56.0
BC 55/35	**Ø 35 mm**	170	113	225	635	100	40	800	500	62.2
BC 75/35					665					67.0
BC 40/50					655					58.1
BC 55/50	**Ø 50 mm**	178	107	210	695	150	85	800	500	64.3
BC 75/50					725					69.1

PORT FLANGE

TYPE **Three-phase**	FLANGE **DN**	F	K mm	D mm	HOLES N°	Ø mm)
BC 40/35						
BC 55/35	**65** (PN10)	**2½"**	145	185	4	18
BC 75/35						
BC 40/50						
BC 55/50	**80** (PN10)	**3"**	160	200	8	18
BC 75/50						

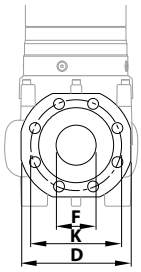

PALLET CAPACITY

TYPE **Three-phase**	NO. OF PUMPS
BC 40/35	12
BC 55/35	12
BC 75/35	12
BC 40/50	12
BC 55/50	12
BC 75/50	12

MATERIALS AND COMPONENTS

1	**Pump body**	Cast iron with cataphoresis treatment
2	**Impeller**	TWO-CHANNEL cast iron type with cataphoresis treatment
3	**Motor sleeve**	Stainless steel **AISI 304**
4	**Motor cover**	Cast iron with cataphoresis treatment
5	**Motor shaft**	Stainless steel **AISI 431**

6 Double mechanical seal with interposed oil chamber

Seal	Shaft	Location	Materials
AR-27	Ø 27 mm	Motor side	Silicon carbide / Graphite / NBR
AR-25	Ø 25 mm	Pump side	Silicon carbide/Silicon carbide/NBR

7 Electric Motor

Three-phase 400 V - 50Hz
with winding integrated thermal motor protection

– Insulation: class F
– Protection rating: IP X8

8 Power cord

※ 10 metres 'H07 RN-F' type

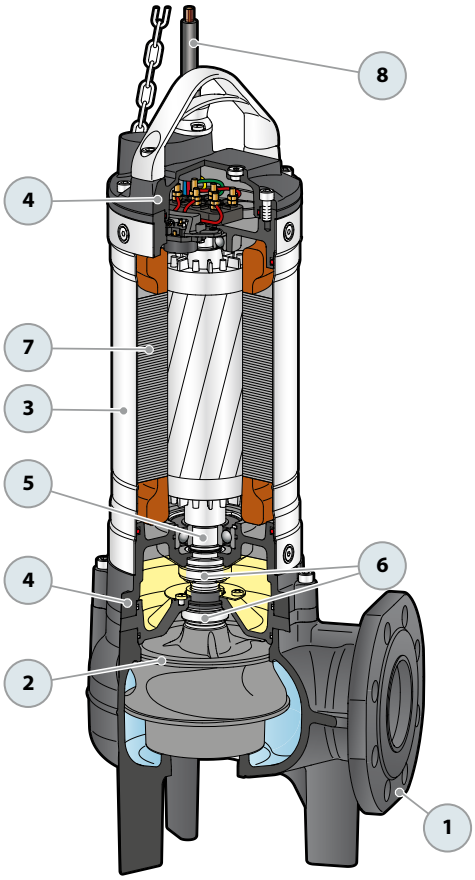

SEWAGE LIFTING SYSTEM VX - BC

VERSION WITH HORIZONTAL DELIVERY AND ¾" GUIDE PIPES

For **VX /50**	Code ASSPVX50	**DN 2**

※ Kit consisting of:

Coupling foot

Guide rail

Support for guide tubes

VERSION WITH VERTICAL DELIVERY AND ¾" GUIDE PIPES

For **VX /50**	Code ASSPVX503V	**DN 2½"**
For **VX /65, BC /35**	Code ASSPVX653V	**DN 3"**
For **BC /50**	Code ASSVXCF071V	

VERSION WITH VERTICAL DELIVERY AND 2" GUIDE TUBES

For **VX /50**	Code ASSPVX50V	**DN 3"**
For **VX /65, BC /35**	Code ASSPVX65V	
For **VX /80, BC /50**	Code ASSVXCF0705V	

※ Kit consisting of:

Coupling foot complete with counterflange

Guide rail

Support for guide tubes

● ACCESSORIES AVAILABLE FOR ORDER

RUNNING GUIDE

※ For VX /50 with Ø ¾" guide tubes	Code ASSFL009
※ For VX /65, BC /35 with Ø ¾" guide tubes	Code ASSFL010
※ For BC /50 with Ø ¾" guide tubes	Code ASSFL0018
※ For VX /50 with Ø 2" guide tubes	Code ASSFL050
※ For VX /65, BC /35 with Ø 2" guide tubes	Code ASSFL065
※ For VX /80, BC /50 with Ø 2" guide tubes	Code ASSFL072

Complete with screws and seals

for Ø ¾" guide tubes

for guide tubes Ø 2"

INTERMEDIATE GUIDE TUBE SUPPORT

※ For Ø ¾" guide tubes	Code 859SV340INTFA
※ For guide tubes Ø 2"	Code 859SV349INTFA

For reasons of stability, an intermediate support should be interposed:
– every 2 metres with ¾" guide pipes (mandatory)
– every 3 metres with 2" guide tubes (recommended)

for Ø ¾" guide tubes

for guide tubes Ø 2"

GUIDE TUBE (AISI 304 stainless steel)

※ 2 metres Ø ¾" guide tube	Code 54SARTG0052F
※ 3 metres Ø ¾" guide tube	Code 54SARTG0053F
※ 6 metres Ø ¾" guide tube	Code 54SARTG0056F
※ 3 metres Ø 2" guide tube	Code 54SARTG0063F
※ 6 metres guide tube Ø 2"	Code 54SARTG0066F

DIMENSIONS (HORIZONTAL delivery version)

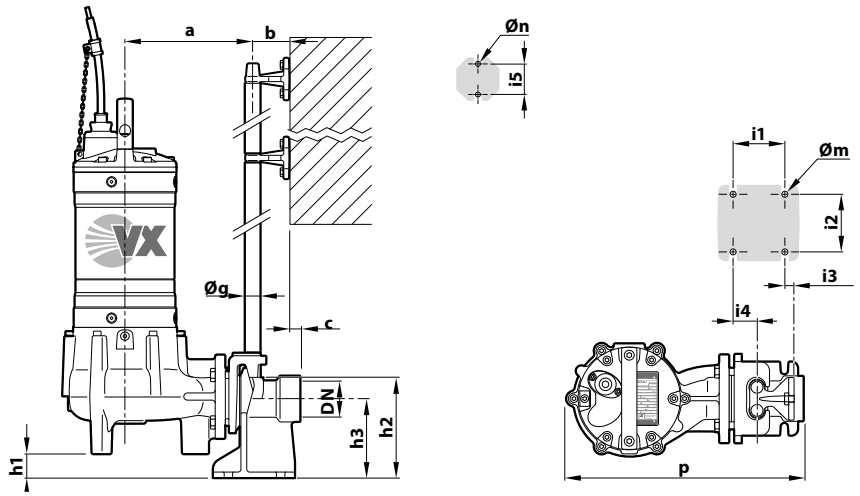

TYPE	Solid bodies mm	PORT DN	DIMENSIONS mm														
			a	b	c	p	h1	h2	h3	i1	i2	i3	i4	i5	Øg	Øm	Øn
VX /50	**Ø 50**	**2"**	214	61	17	400	30	165	130	85	94	16	40	50	¾"	12	11

DIMENSIONS (Version with VERTICAL delivery)

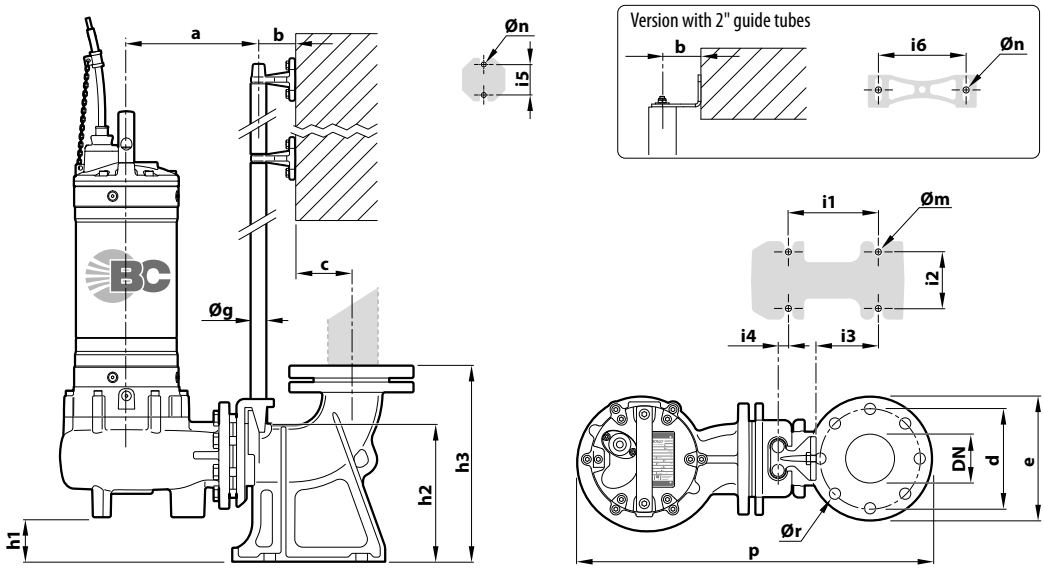

※ **Version with ¾" guide tubes**

TYPE	Solid bodies mm	PORT DN	DIMENSIONS mm																	
			a	b	c	d	e	p	h1	h2	h3	i1	i2	i3	i4	i5	Øg	Øm	Øn	Ør
VX /50	**Ø 50 mm**	**2½"**	211	61	52	125	165	506	28	164	216	120	72	62	3	50	¾"	14	11	18
VX /65	**Ø 65 mm**	**3"**	213		69	150	190	537	48	216	280	130	112	84	15					
BC /35	**Ø 35 mm**		231					550	69											
BC /50	**Ø 50 mm**		222					553	19											

※ **Version with 2" guide tubes**

TYPE	Solid bodies mm	PORT DN	DIMENSIONS mm																		
			a	b	c	d	e	p	h1	h2	h3	i1	i2	i3	i4	i5	i6	Øg	Øm	Øn	Ør
VX /50	**Ø 50 mm**	**3"**	319	86	95	160	200	706	107	264	392	250	150	34	–	80	186	2"	22	13.5	18
VX /65	**Ø 65 mm**							697	86												
VX /80	**Ø 80 mm**		328					714	57												
BC /35	**Ø 35 mm**		319					710	107												
BC /50	**Ø 50 mm**		328					714	57												

Sewage
Civil use
Industrial use

※ Submersible pumps 4 poles (1450 min^{-1})

PERFORMANCE RANGE

- Flow rate up to **900 l/min** (54 m³/h)
- Head up to **7 m**

INSTALLATION AND USE

The **VX4** series is constructed from thick cast iron, offering exceptional robustness, abrasion resistance, and longevity. Equipped with **VORTEX**-type impellers, known for their reliability and minimal clogging risk, these pumps are versatile for handling sewage with suspended solids up to **80 mm** in diameter, as well as wastewater, rainwater, city sewage, and industrial wastewater. They are suitable for a wide range of applications, including sewers, tunnels, excavations, canals, and underground parking facilities.

ELECTRIC MOTOR

※ **The electric motor is safeguarded by a special three-phase thermal protector, situated within the motor, which activates in case of overheating or abnormal power consumption.**

INCLUDES

※ Power cable length **10 m**

APPLICATION LIMITS

- Depth below water level up to **10 m** (with an appropriately sized power cable)
- Liquid temperature up to **+40 °C**
- Suspended solids transfer:
  – up to **Ø 50 mm** for VX4-10/50
  – up to **Ø 65 mm** for VX4-10/65
  – up to **Ø 80 mm** for VX4-10/80
- **Minimum immersion for continuous service: 500 mm**

AVAILABLE UPON REQUEST

※ Different voltage requirements 60 Hz frequency

PATENTS - TRADE MARKS - MODELS

- Registered Community Model No. 003863158-0002

CURVES AND PERFORMANCE DATA – n= 1450 min^{-1} 50 Hz

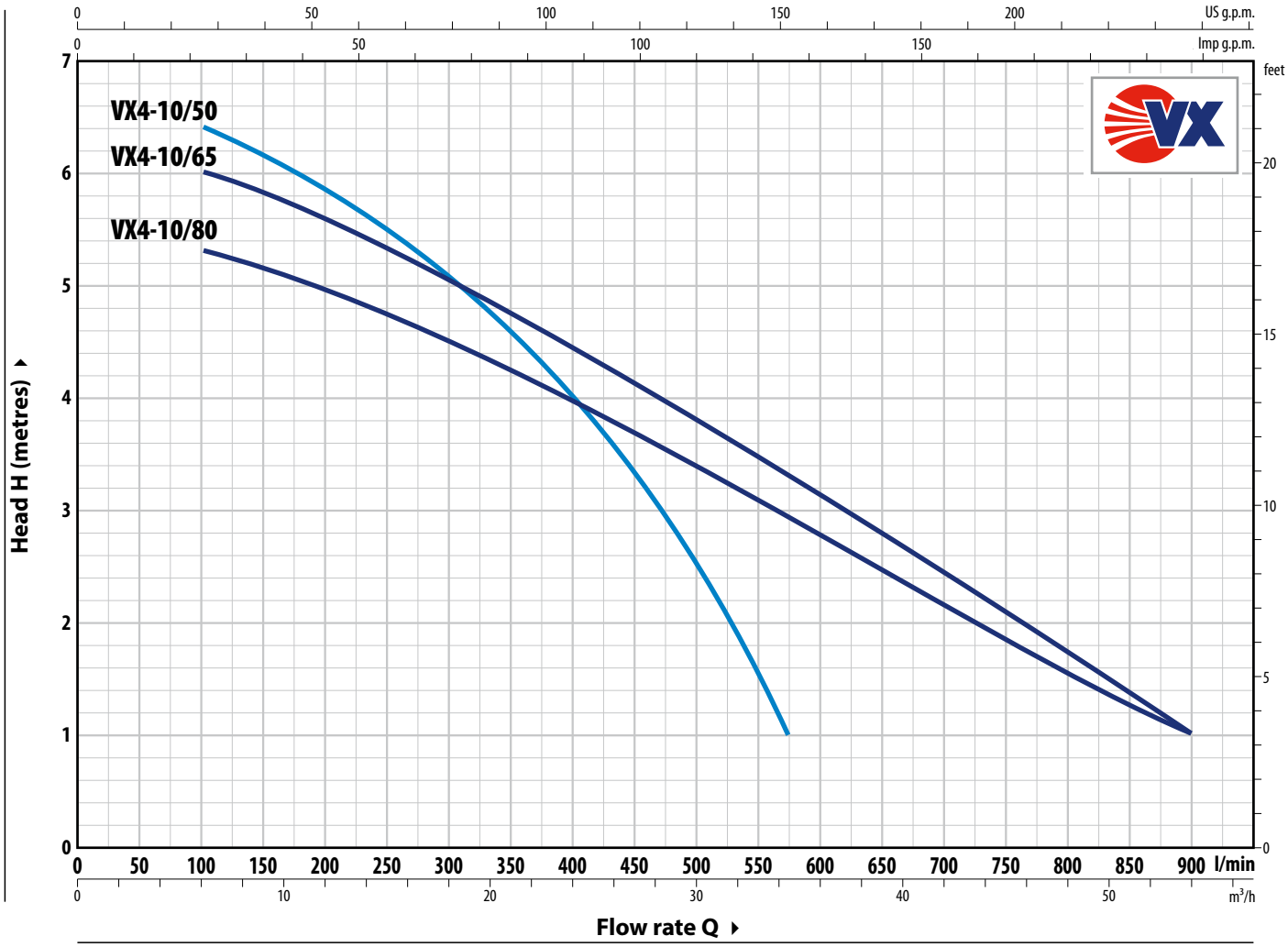

TYPE Three-phase	POWER (P2) kW	HP	Q	m³/h	0	6	12	24	30	34.5	36	45	54
				l/min	**0**	**100**	**200**	**400**	**500**	**575**	**600**	**750**	**900**
VX4-10/50	0.75	1			7	6.4	5.8	5	4	2.5	1		
VX4-10/65	0.75	1	**H**	metres	6	6	5.6	5	4.4	3.8	3.3	2	1
VX4-10/80	0.75	1			5.5	5.3	4.9	4.5	3.9	3.4	2.9	1.8	1

Q = Flow rate **H** = Total manometric head

Performance curves comply with EN ISO 9906 Grade 3B tolerance limits.

ABSORPTION

TYPE **Three-phase**	VOLTAGE **400 V**
VX4-10/50	2.7 A
VX4-10/65	2.7 A
VX4-10/80	2.7 A

DIMENSIONS AND WEIGHT

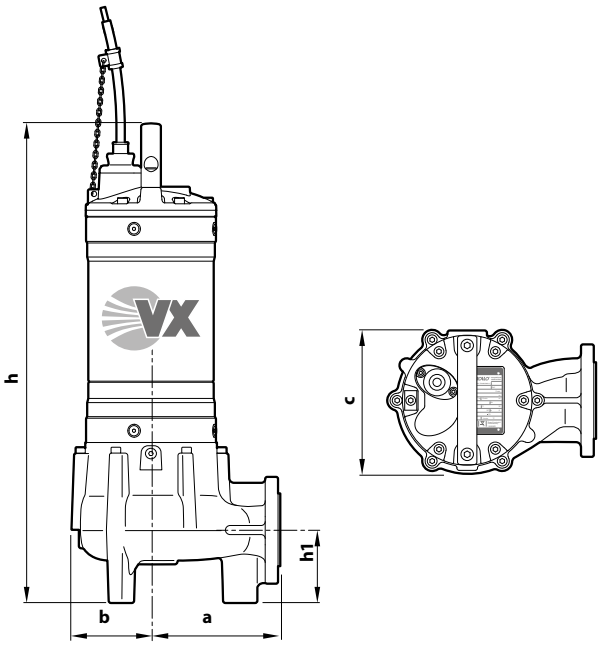

Typical installation

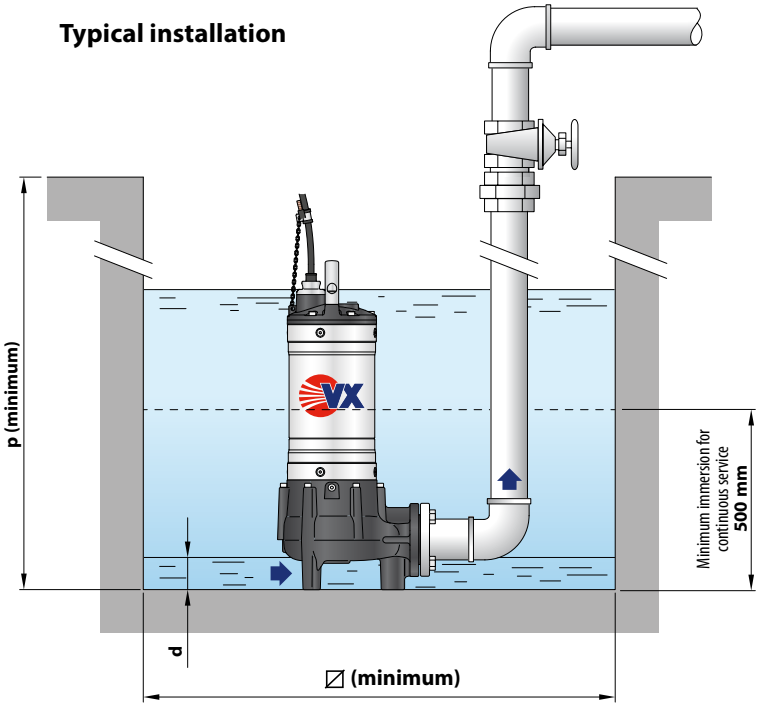

TYPE **Three-phase**	Passage of solid bodies	DIMENSIONS mm								kg
		a	b	c	h	h1	d	p	⧄	3~
VX4-10/50	**Ø 50 mm**	170	106	193	602	100	55	700	500	47.3
VX4-10/65	**Ø 65 mm**	170	107	196	630	121	70	800	500	50.6
VX4-10/80	**Ø 80 mm**	178	107	210	655	150	85	800	500	52.1

PORT FLANGE

TYPE **Three-phase**	FLANGE **DN**	F	K mm	D mm	HOLES N°	 Ø (mm)
VX4-10/50	**50** (PN10)	2"	125	150	4	18
VX4-10/65	**65** (PN10)	2½"	145	185	8	18
VX4-10/80	**80** (PN10)	3"	160	200	8	18

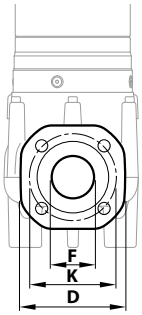

PALLET CAPACITY

TYPE **Three-phase**	NO. OF PUMPS
VX4-10/50	12
VX4-10/65	12
VX4-10/80	12

MATERIALS AND COMPONENTS

1	**Pump body**	Cast iron with cataphoresis treatment
2	**Impeller**	Cast iron VORTEX type with cataphoresis treatment
3	**Motor sleeve**	Stainless steel **AISI 304**
4	**Motor cover**	Cast iron with cataphoresis treatment
5	**Motor shaft**	Stainless steel **AISI 431**

6 Double mechanical seal with interposed oil chamber

Seal	Shaft	Location	Materials
AR-27	Ø 27 mm	Motor side	Silicon carbide / Graphite / NBR
AR-25	Ø 25 mm	Pump side	Silicon carbide/Silicon carbide/NBR

7 Electric Motor

Three-phase 400 V - 50Hz
with winding integrated thermal three-phase motor protection

– Insulation: class F
– Protection rating: IP X8

8 Power cord

※ 10 metres 'H07 RN-F' type

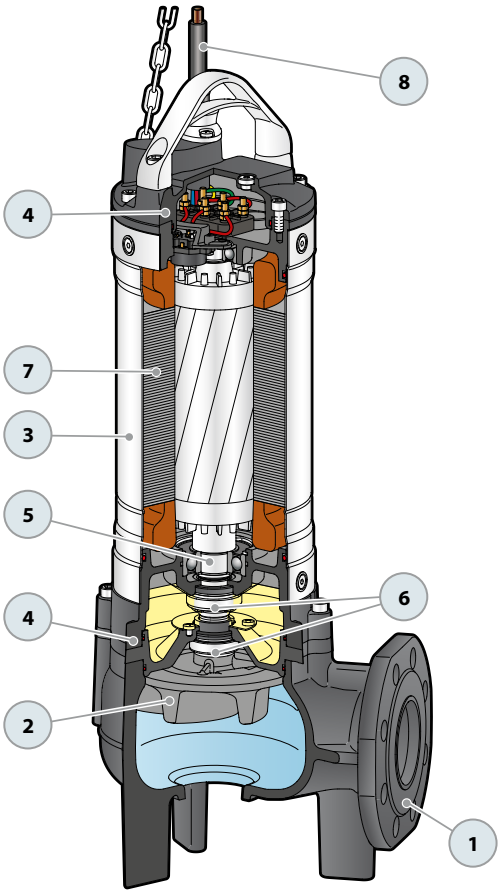

Sewage

Civil use

Industrial use

※ Submersible pumps 4 poles (1450 min^{-1})

PERFORMANCE RANGE

- Flow rate up to **1200 l/min** (72 m³/h)
- Head up to **6 m**

INSTALLATION AND USE

The **BC4** series is constructed from thick stainless steel and cast iron, offering exceptional robustness, abrasion resistance, and durability. Equipped with a **TWO-CHANNEL** impeller, the pumps are designed to **drain sewage, sludge-mixed water, and activated and putrid sludge**. They are suitable for a wide range of applications, including sewers, tunnels, excavations, canals, and underground parking facilities.

ELECTRIC MOTOR

※ **The electric motor is safeguarded by a special three-phase thermal protector, situated within the motor, which activates in case of overheating or abnormal power consumption.**

INCLUDES

※ Power cable length **10 m**

APPLICATION LIMITS

- Depth below water level up to **10 m** (with an appropriately sized power cable)
- Liquid temperature up to **+40 °C**
- Capable of processing suspended solids up to **Ø 50 mm**
- **Minimum immersion for continuous service: 500 mm**

AVAILABLE UPON REQUEST

※ Different voltage requirements 60 Hz frequency

PATENTS - TRADE MARKS - MODELS

- Registered Community Model No. 003863158-0001

CURVES AND PERFORMANCE DATA – n= 1450 min^{-1} 50 Hz

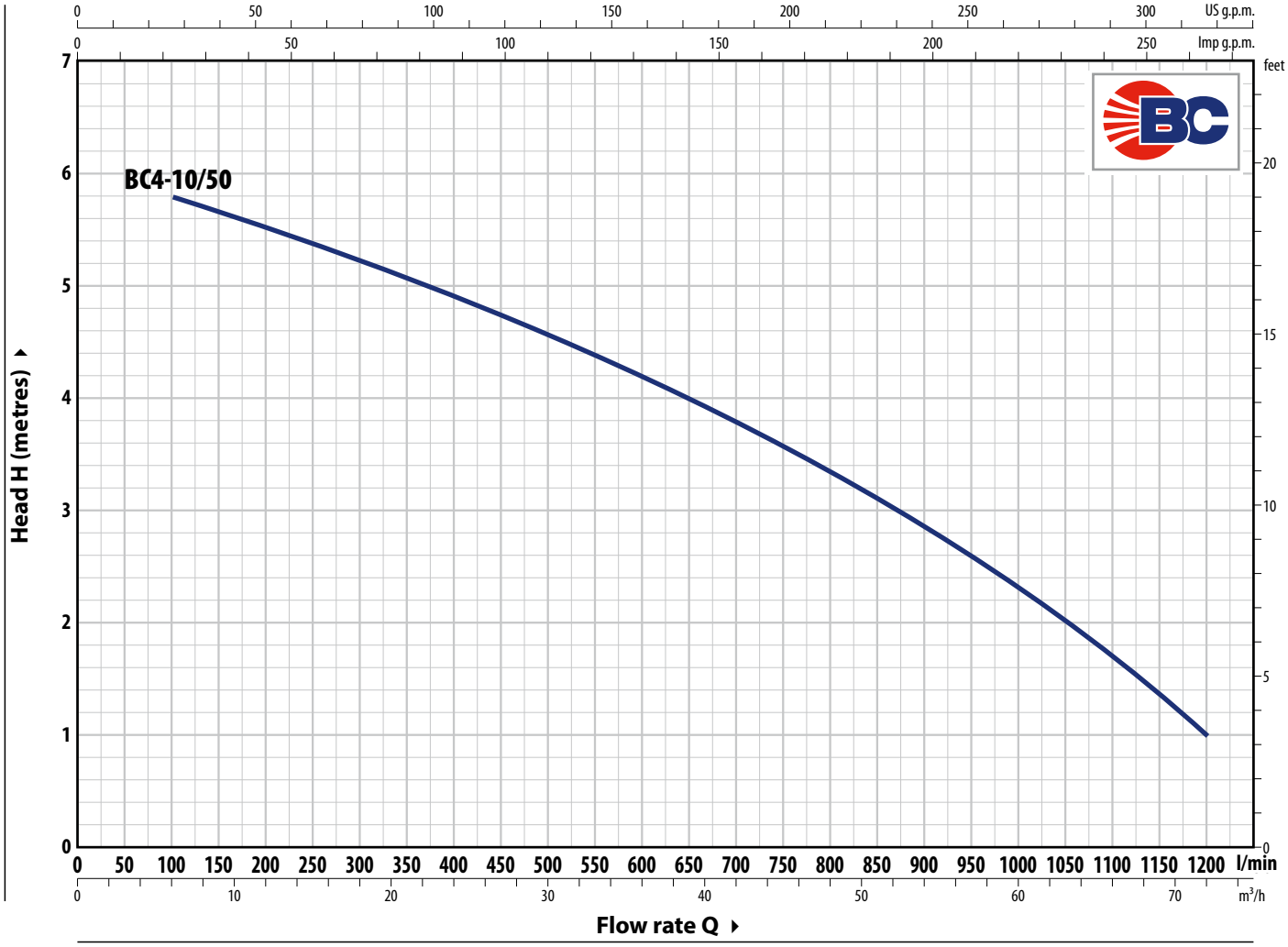

TYPE	POWER (P2)		Q	m³/h	0	6	12	24	30	36	45	54	60	72
Three-phase	kW	HP		l/min	**0**	**100**	**200**	**400**	**500**	**600**	**750**	**900**	**1000**	**1200**
BC4-10/50	0.75	1	**H**	metres	6	6	5.9	5.3	5	4.4	3.6	2.7	2	1

Q = Flow rate **H** = Total manometric head

Performance curves comply with EN ISO 9906 Grade 3B tolerance limits.

ABSORPTION

TYPE **Three-phase**	VOLTAGE **400 V**
BC4-10/50	2.7 A

DIMENSIONS AND WEIGHT

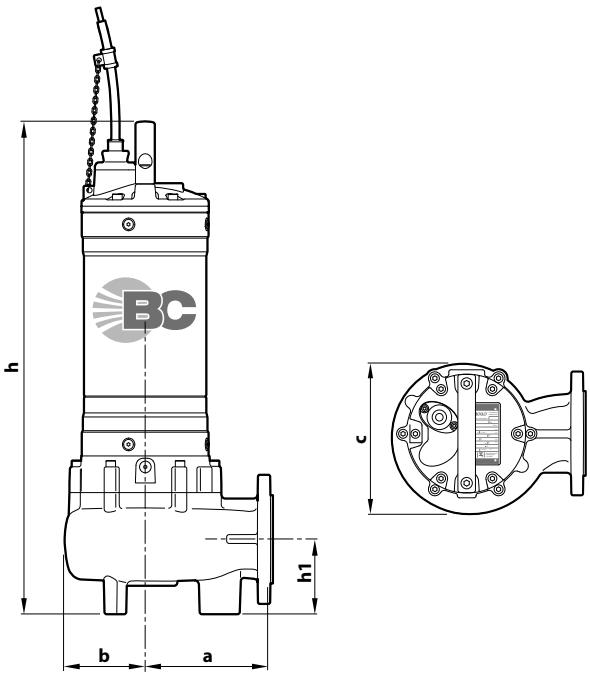

Typical installation

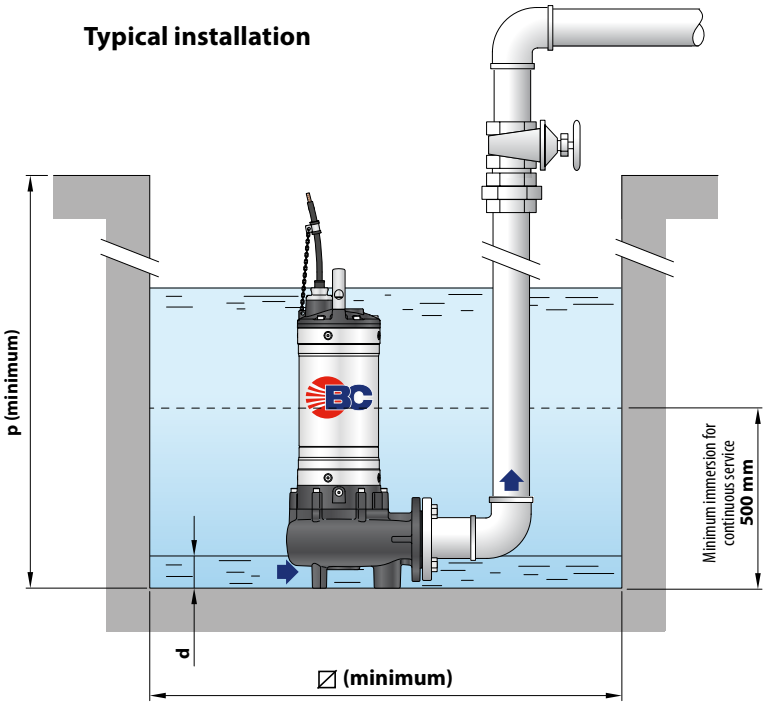

TYPE **Three-phase**	Passage of solid bodies	DIMENSIONS mm								
		a	b	c	h	h1	d	p	∅	3~
BC4-10/50	**Ø 50 mm**	178	107	210	655	150	85	800	500	55.8

PORT FLANGE

TYPE **Three-phase**	FLANGE **DN**	F	K mm	D mm	HOLES N°	 Ø mm)
BC4-10/50	**80** (PN10)	**3"**	160	200	8	18

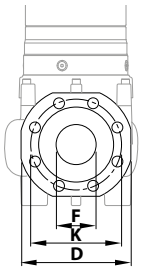

PALLET CAPACITY

TYPE **Three-phase**	NO. OF PUMPS
BC4-10/50	12

MATERIALS AND COMPONENTS

1	**Pump body**	Cast iron with cataphoresis treatment
2	**Impeller**	TWO-CHANNEL cast iron type with cataphoresis treatment
3	**Motor sleeve**	Stainless steel **AISI 304**
4	**Motor cover**	Cast iron with cataphoresis treatment
5	**Motor shaft**	Stainless steel **AISI 431**

6 Double mechanical seal with interposed oil chamber

Seal	Shaft	Location	Materials
AR-27	Ø 27 mm	Motor side	Silicon carbide / Graphite / NBR
AR-25	Ø 25 mm	Pump side	Silicon carbide/Silicon carbide/NBR

7 Electric Motor

Three-phase 400 V - 50Hz
with winding integrated thermal three-phase motor protection

– Insulation: class F
– Protection rating: IP X8

8 Power cord

※ 10 metres 'H07 RN-F' type

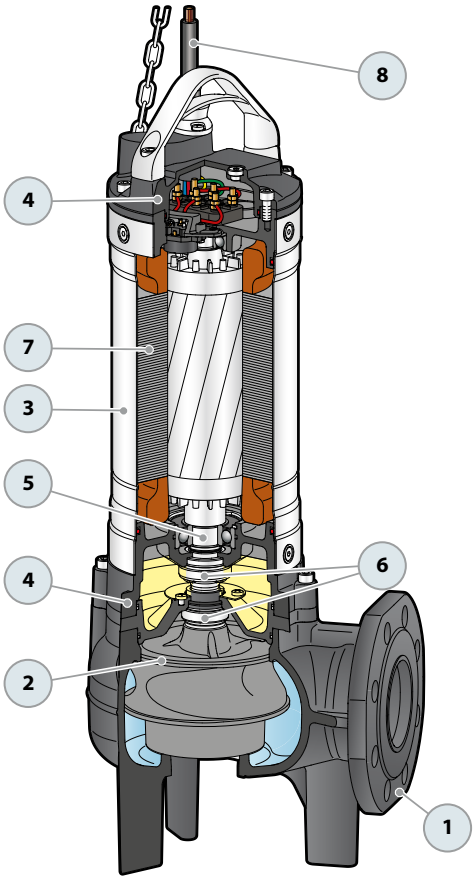

SEWAGE LIFTING SYSTEM VX4 - BC4

VERSION WITH HORIZONTAL DELIVERY AND ¾" GUIDE PIPES

For **VX4 /50**	Code ASSPVX50	**DN 2**

※ **Kit consisting of:**

Coupling foot

Guide rail

Support for guide tubes

VERSION WITH VERTICAL DELIVERY AND ¾" GUIDE PIPES

For **VX4 /50**	Code ASSPVX503V	**DN 2½"**
For **VX4 /65**	Code ASSPVX653V	**DN 3"**
For **BC4 /50**	Code ASSVXCF071V	

VERSION WITH VERTICAL DELIVERY AND 2" GUIDE TUBES

For **VX4 /50**	Code ASSPVX50V	**DN 3"**
For **VX4 /65**	Code ASSPVX65V	
For **VX4 /80, BC4 /50**	Code ASSVXCF0705V	

※ **Kit consisting of:**

Coupling foot complete with counterflange

Guide rail

Support for guide tubes

● ACCESSORIES AVAILABLE FOR ORDER

RUNNING GUIDE

※ For VX4 /50 with Ø ¾" guide tubes	Code ASSFL009
※ For VX4 /65 with Ø ¾" guide tubes	Code ASSFL010
※ For BC4 /50 with Ø ¾" guide tubes	Code ASSFL0018
※ For VX4 /50 with Ø 2" guide tubes	Code ASSFL050
※ For VX4 /65 with Ø 2" guide tubes	Code ASSFL065
※ For VX4 /80, BC4 /50 with Ø 2" guide tubes	Code ASSFL072

Complete with screws and seals

for Ø ¾" guide tubes

for guide tubes Ø 2"

INTERMEDIATE GUIDE TUBE SUPPORT

※ For Ø ¾" guide tubes	Code 859SV340INTFA
※ For guide tubes Ø 2"	Code 859SV349INTFA

For reasons of stability, an intermediate support should be interposed:
– every 2 metres with ¾" guide pipes (mandatory)
– every 3 metres with 2" guide tubes (recommended)

for Ø ¾" guide tubes

for guide tubes Ø 2"

GUIDE TUBE (AISI 304 stainless steel)

※ 2 metres Ø ¾" guide tube	Code 54SARTG0052F
※ 3 metres Ø ¾" guide tube	Code 54SARTG0053F
※ 6 metres Ø ¾" guide tube	Code 54SARTG0056F
※ 3 metres Ø 2" guide tube	Code 54SARTG0063F
※ 6 metres guide tube Ø 2"	Code 54SARTG0066F

DIMENSIONS (HORIZONTAL delivery version)

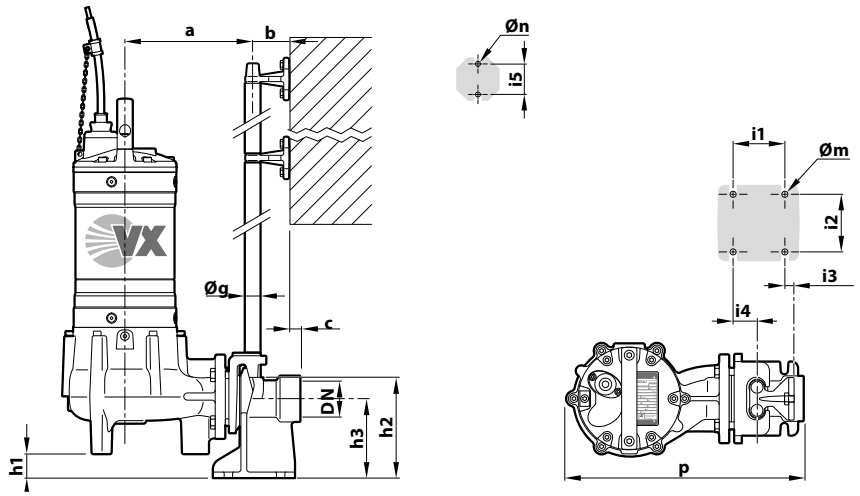

TYPE	Solid bodies mm	PORT DN	DIMENSIONS mm														
			a	b	c	p	h1	h2	h3	i1	i2	i3	i4	i5	Øg	Øm	Øn
VX4 /50	**Ø 50**	**2"**	214	61	17	400	30	165	130	85	94	16	40	50	¾"	12	11

DIMENSIONS (Version with VERTICAL delivery)

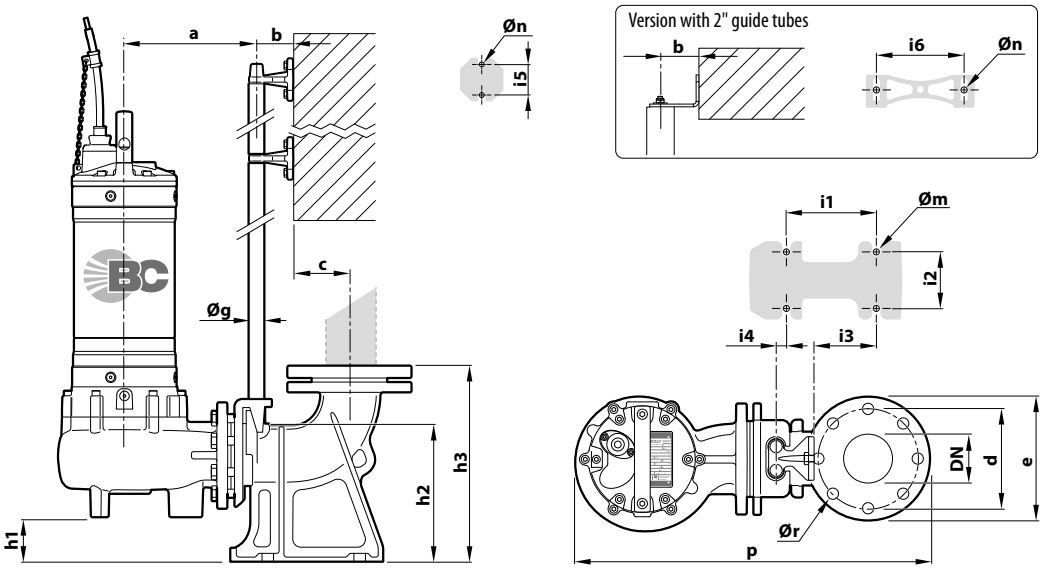

※ **Version with ¾" guide tubes**

TYPE	Solid bodies mm	PORT DN	DIMENSIONS mm																	
			a	b	c	d	e	p	h1	h2	h3	i1	i2	i3	i4	i5	Øg	Øm	Øn	Ør
VX4 /50	**Ø 50 mm**	**2½"**	211	61	52	125	165	506	28	164	216	120	72	62	3	50	¾"	14	11	18
VX4 /65	**Ø 65 mm**	**3"**	213		69	150	190	537	48	216	280	130	112	84	15					
BC4 /50	**Ø 50 mm**		222					553	19											

※ **Version with 2" guide tubes**

TYPE	Solid bodies mm	PORT DN	DIMENSIONS mm																		
			a	b	c	d	e	p	h1	h2	h3	i1	i2	i3	i4	i5	i6	Øg	Øm	Øn	Ør
VX4 /50	**Ø 50 mm**	**3"**	319	86	95	160	200	706	107	264	392	250	150	34	–	80	186	2"	22	13.5	18
VX4 /65	**Ø 65 mm**							697	86												
VX4 /80	**Ø 80 mm**		328					714	57												
BC4 /50	**Ø 50 mm**		328					714	57												

Sewage

Civil use

Industrial use

※ Submersible pumps 4 poles (1450 min^{-1})

PERFORMANCE RANGE

- Flow rate up to **2200 l/min** (132 m^3/h)
- Head up to **12.2 m**

INSTALLATION AND USE

The **VXC4** series is constructed from thick stainless steel and cast iron, offering exceptional robustness, abrasion resistance, and durability. Equipped with a **VORTEX**-type impeller, the pumps are designed to **drain sewage, sludge-mixed water, and activated and putrid sludge**.
They are suitable for a wide range of applications, including sewers, tunnels, excavations, canals, and underground parking facilities.

ELECTRIC MOTOR

※ **The electric motor is safeguarded by a special three-phase thermal protector, situated within the motor, which activates in case of overheating or abnormal power consumption.**

INCLUDES

※ Power cable length **10 m**

APPLICATION LIMITS

- Depth below water level up to **10 m** (with an appropriately sized power cable)
- Liquid temperature up to **+40 °C**
- Capable of processing suspended solids up to Ø **100 mm**
- **Minimum immersion for continuous service: 550 mm**

AVAILABLE UPON REQUEST

※ Pumps equipped with internal probes that detect the presence of water in the oil chamber
※ Different voltage requirements 60 Hz frequency

PATENTS - TRADE MARKS - MODELS

- Registered Community Model No. 003863158-0003

CURVES AND PERFORMANCE DATA – n= 1450 min^{-1} 50 Hz

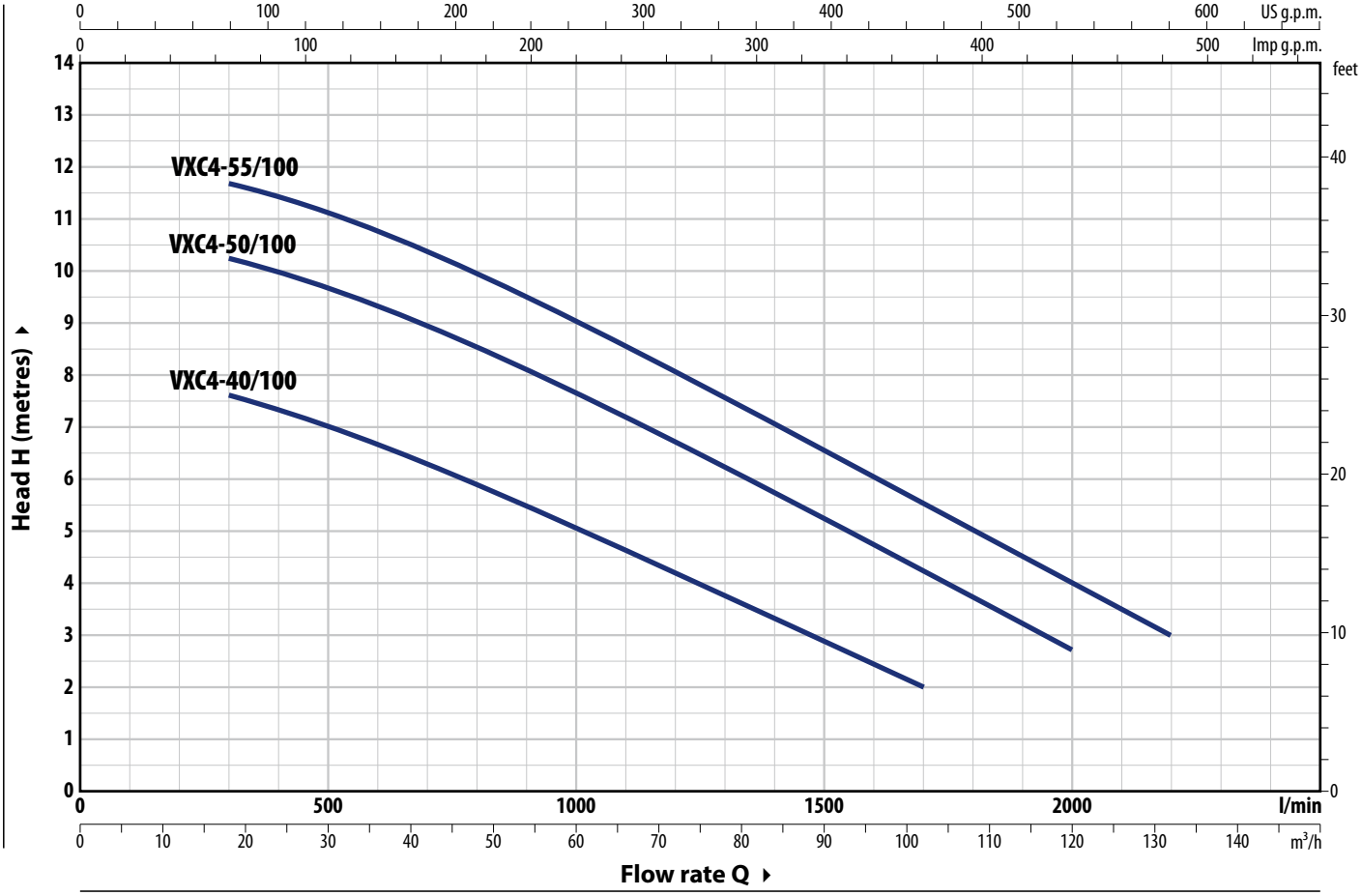

TYPE Three-phase	POWER (P2) kW	HP	Q m³/h / l/min	0 / 0	18 / 300	30 / 500	45 / 750	60 / 1000	75 / 1250	90 / 1500	102 / 1700	120 / 2000	132 / 2200
VXC4-40/100	3	4		8.3	7.6	7	6	5	4	3	2		
VXC4-50/100	3.7	5	**H** metres	10.8	10.2	9.6	8.7	7.6	6.4	5.2	4.2	2.7	
VXC4-55/100	4	5.5		12.2	11.7	11	10.2	9	7.8	6.5	5.5	4	3

Q = Flow rate **H** = Total manometric head

Performance curves comply with EN ISO 9906 Grade 3B tolerance limits.

ABSORPTION

TYPE Three-phase	VOLTAGE 400 V
VXC4-40/100	5.5 A
VXC4-50/100	7.7 A
VXC4-55/100	9.0 A

DIMENSIONS AND WEIGHT

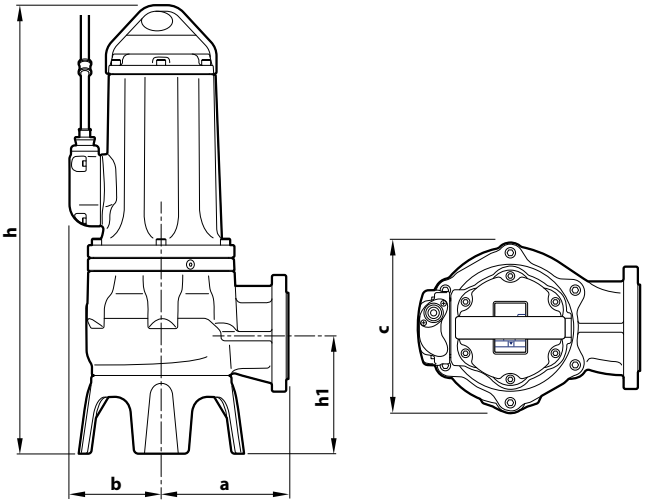

Typical installation

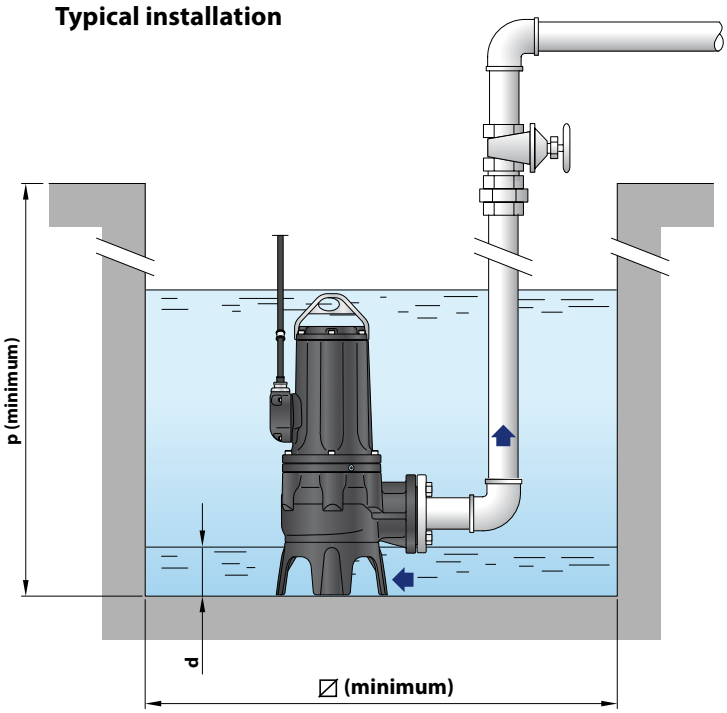

TYPE **Three-phase**	Passage of solid bodies	DIMENSIONS mm a	b	c	h	h1	d	p	∅	kg 3~
VXC4-40/100	**Ø 100 mm**	228	165	302	806	211	140	1000	1000	129.1
VXC4-50/100										129.0
VXC4-55/100										132.0

PORT FLANGE

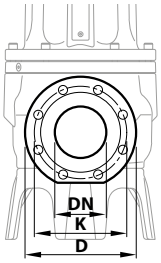

TYPE **Three-phase**	FLANGE **DN**	K mm	D mm	HOLES N°	Ø (mm)
VXC4-40/100	**100** (PN10)	180	220	8	18
VXC4-50/100					
VXC4-55/100					

COUNTERFLANGE

(CAN BE ORDERED SEPARATELY)

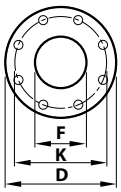

TYPE **Three-phase**	FLANGE **DN**	F	K mm	D mm	HOLES N°	Ø (mm)
VXC4-40/100	**100**	4"	180	220	8	18
VXC4-50/100						
VXC4-55/100						

PALLET CAPACITY

TYPE **Three-phase**	NO. OF PUMPS
VXC4-40/100	4
VXC4-50/100	4
VXC4-55/100	4

MATERIALS AND COMPONENTS

1	**Pump body**	Cast iron with cataphoresis treatment
2	**Base**	Cast iron with cataphoresis treatment
3	**Impeller**	Cast iron VORTEX type with cataphoresis treatment
4	**Motor holder**	Cast iron with cataphoresis treatment
5	**Motor cover**	Cast iron with cataphoresis treatment
6	**Motor shaft**	Stainless steel **AISI 431**

7 Double mechanical seal with interposed oil chamber

Seal	Shaft	Location	Materials
MG91-40D	Ø 40 mm	Motor side	Silicon carbide / Graphite / NBR
		Pump side	Silicon carbide/Silicon carbide/NBR

8 Electric motor

Three-phase 400 V - 50Hz
with winding integrated thermal motor protection

– Insulation: class F
– Protection rating: IP X8

9 Power cord

※ 10 metres 'H07 RN-F' type

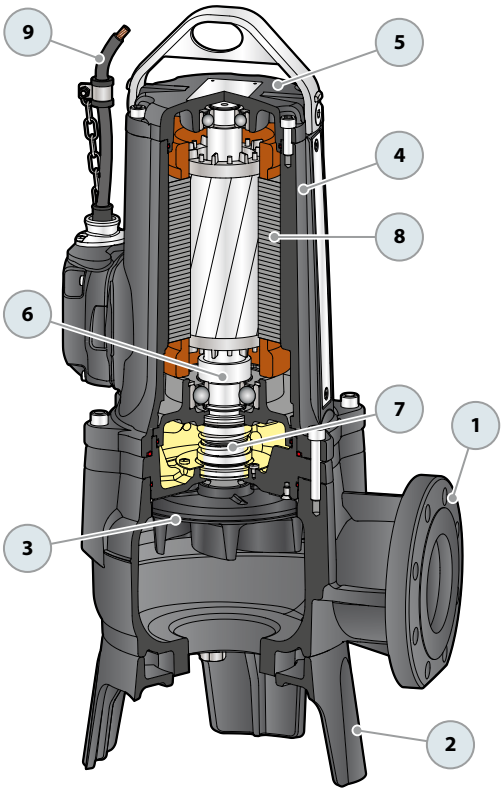

MC4 Submersible pumps - 4 POLES TWO-CHANNEL

Sewage

Civil use

Industrial use

※ Submersible pumps 4 poles (1450 min^{-1})

PERFORMANCE RANGE

- Flow rate up to **2900 l/min** (174 m^3/h)
- Head up to **16 m**

INSTALLATION AND USE

The **MC4** series is constructed from thick stainless steel and cast iron, offering exceptional robustness, abrasion resistance, and durability. Equipped with a **TWO-CHANNEL** impeller, the pumps are designed to **drain liquids containing suspended solids and short fibers, as well as sewage**, sludge-mixed water, groundwater, and surface water.
They are suitable for a wide range of applications, including apartment buildings, public facilities, industries, parking facilities, washing areas.

ELECTRIC MOTOR

※ **The electric motor is safeguarded by a special three-phase thermal protector, situated within the motor, which activates in case of overheating or abnormal power consumption.**

INCLUDES

※ Power cable length **10 m**

APPLICATION LIMITS

- Depth below water level up to **10 m** (with an appropriately sized power cable)
- Liquid temperature up to **+40 °C**
- Capable of processing suspended solids up to **Ø 55 mm**
- **Minimum immersion for continuous service: 550 mm**

AVAILABLE UPON REQUEST

※ Pumps equipped with internal probes that detect the presence of water in the oil chamber

PATENTS - TRADE MARKS - MODELS

- Registered Community Model No. 003863158-0004

CURVES AND PERFORMANCE DATA – n= 1450 min^{-1} 50 Hz

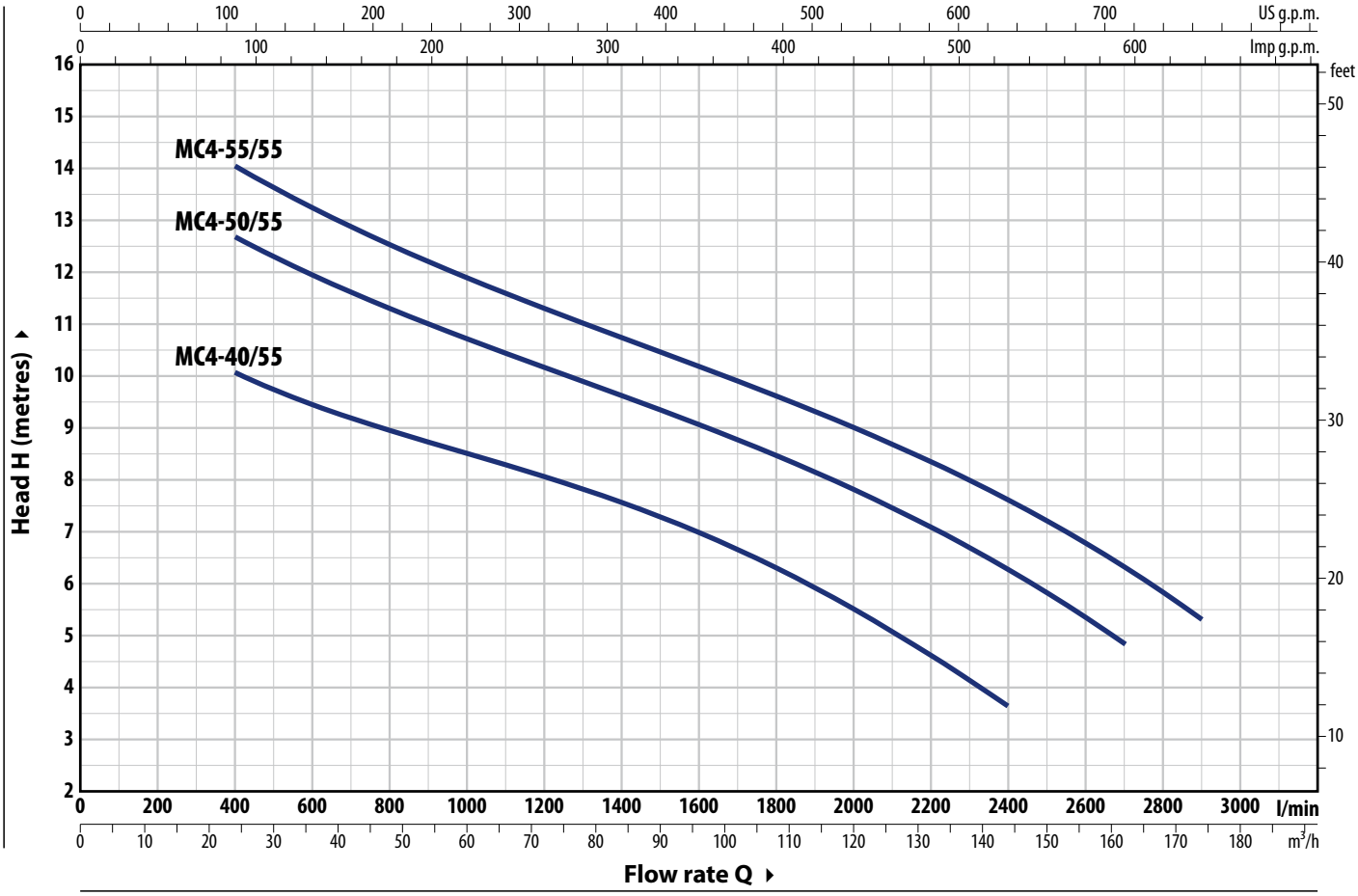

TYPE Three-phase	POWER (P2) kW	HP	Q	m³/h	0	24	48	72	96	108	120	132	144	162	174
				l/min	**0**	**400**	**800**	**1200**	**1600**	**1800**	**2000**	**2200**	**2400**	**2700**	**2900**
MC4-40/55	3	4			12	10	9	8	7	6.3	5.5	4.6	3.6		
MC4-50/55	3.7	5	**H**	metres	14.5	12.6	11.3	10	9	8.4	7.8	7	6.2	4.8	
MC4-55/55	4	5.5			16	14	12.5	11.3	10.2	9.6	9	8.3	7.6	6.3	5.3

Q = Flow rate **H** = Total manometric head

Performance curves comply with EN ISO 9906 Grade 3B tolerance limits.

ABSORPTION

TYPE **Three-phase**	VOLTAGE **400 V**
MC4-40/55	5.5 A
MC4-50/55	7.7 A
MC4-55/55	8.3 A

DIMENSIONS AND WEIGHT

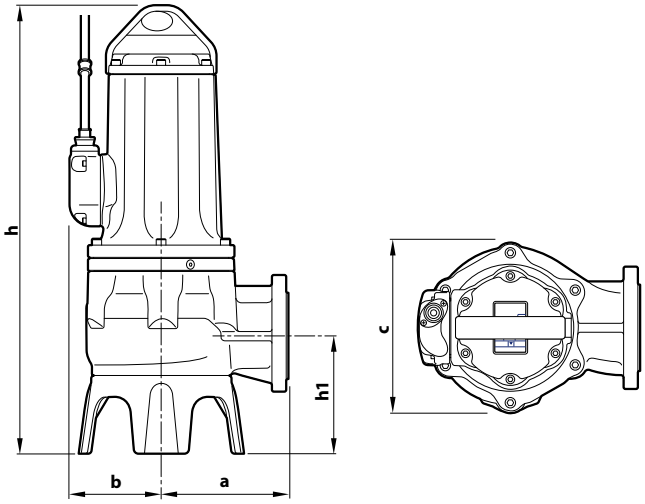

Typical installation

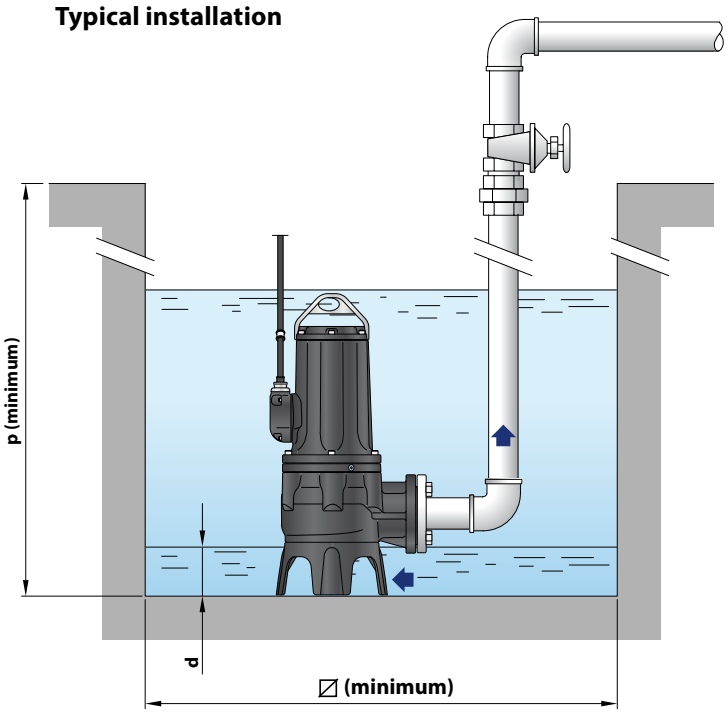

TYPE **Three-phase**	Passage of solid bodies	DIMENSIONS mm a	b	c	h	h1	d	p	⧄	kg 3~
MC4-40/55	**Ø 55 mm**	248	165	320	792	228	140	1000	1000	125.2
MC4-50/55										133.0
MC4-55/55										136.0

PORT FLANGE

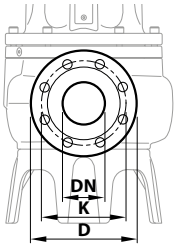

TYPE **Three-phase**	FLANGE **DN**	K **mm**	D **mm**	HOLES **N°**	**Ø (mm)**
MC4-40/55	**80** (PN10)	160	200	8	18
MC4-50/55					
MC4-55/55					

COUNTERFLANGE

(CAN BE ORDERED SEPARATELY)

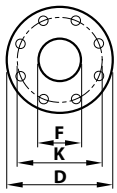

TYPE **Three-phase**	FLANGE **DN**	F	K **mm**	D **mm**	HOLES **N°**	**Ø (mm)**
MC4-40/55	**80**	3"	160	200	8	18
MC4-50/55						
MC4-55/55						

PALLET CAPACITY

TYPE **Three-phase**	NO. OF PUMPS
MC4-40/55	4
MC4-50/55	4
MC4-55/55	4

MATERIALS AND COMPONENTS

1	**Pump body**	Cast iron with cataphoresis treatment
2	**Base**	Cast iron with cataphoresis treatment
3	**Impeller**	TWO-CHANNEL cast iron type with cataphoresis treatment
4	**Motor holder**	Cast iron with cataphoresis treatment
5	**Motor cover**	Cast iron with cataphoresis treatment
6	**Motor shaft**	Stainless steel **AISI 431**

7 Double mechanical seal with interposed oil chamber

Seal	Shaft	Location	Materials
MG91-40D	Ø 40 mm	Motor side	Silicon carbide / Graphite / NBR
		Pump side	Silicon carbide/Silicon carbide/NBR

8 Electric motor

Three-phase 400 V - 50Hz
with winding integrated thermal motor protection

– Insulation: class F
– Protection rating: IP X8

9 Power cord

※ 10 metres 'H07 RN-F' type

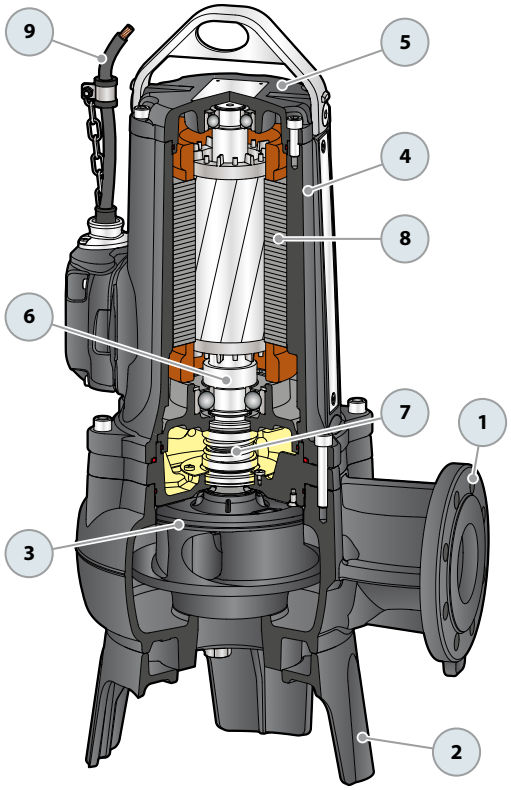

SEWAGE LIFTING SYSTEM VXC4 - MC4

VERSION WITH VERTICAL DELIVERY AND 2" GUIDE TUBES

For **VXC4**	Code ASSPVXC4V	DN **4"**
For **MC4**	Code ASSPMC4V	DN **3"**

※ Kit consisting of:

Coupling foot complete with counterflange

Slide rail with screws and gasket

Support for guide tubes

ACCESSORIES AVAILABLE FOR ORDER

RUNNING GUIDE

※ For VXC4	Code ASSFL100
※ For MC4	Code ASSFL080

Complete with screws and seals

INTERMEDIATE GUIDE TUBE SUPPORT

※ For guide tubes Ø 2"	Code 859SV349INTFA

For reasons of stability, interpose a support every 3 metres (recommended)

GUIDE TUBE (AISI 304 stainless steel)

※ 3 metres Ø 2" guide tube	Code 54SARTG0063F
※ 6 metres guide tube Ø 2"	Code 54SARTG0066F

Typical installation

1. Water pump
2. Pump Base
3. Guide Rails
4. Upper Guide Rail Support
5. Intermediate Guide Rail Support
6. Lifting chain
7. Control Panel
8. Stop Float Switch
9. Start Float Switch
10. Supplementary pump start float switch
11. Alarm float
12. Check val

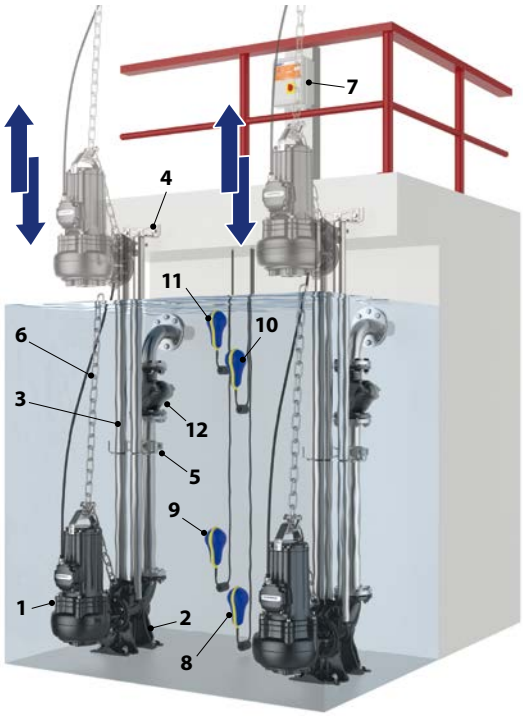

DIMENSIONS

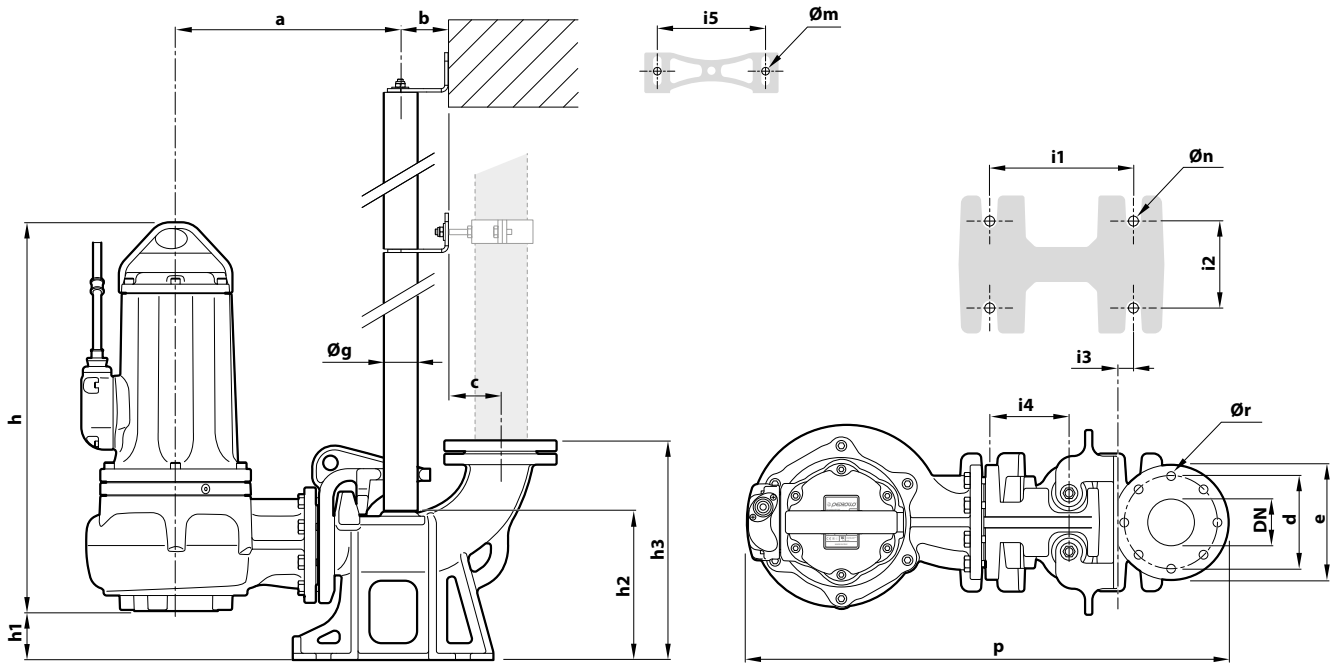

TYPE **Three-phase**	Passage of solid bodies mm	PORT **DN**	DIMENSIONS mm a	b	c	d	e	p	h	h1	h2	h3	i1	i2	i3	i4	i5	Øg	Øm	Øn	Ør
VXC4-40/100																					
VXC4-50/100	**Ø 100 mm**	**4"**	376	85	105	180	220	841	695	107	266	426	250	150	34	130	186	2"	13	16	18
VXC4-55/100																					

TYPE **Three-phase**	Passage of solid bodies mm	PORT **DN**	DIMENSIONS mm a	b	c	d	e	p	h	h1	h2	h3	i1	i2	i3	i4	i5	Øg	Øm	Øn	Ør
MC4-40/55																					
MC4-50/55	**Ø 55 mm**	**3"**	396	85	95	160	200	841	680	92	256	592	250	150	34	130	186	2"	13	16	18
MC4-55/55																					

Sewage
Civil use
Industrial use

※ Submersible pumps 4 poles (1450 min^{-1})

PERFORMANCE RANGE

- Flow rate up to **5000 l/min** (300 m^3/h)
- Head up to **22.5 m**

INSTALLATION AND USE

The **VXC4** series is constructed from thick stainless steel and cast iron, offering exceptional robustness, abrasion resistance, and durability. Equipped with a **VORTEX**-type impeller, the pumps are designed to **drain sewage, sludge-mixed water, and activated and putrid sludge**.
They are suitable for a wide range of applications, including sewers, tunnels, excavations, canals, and underground parking facilities.

ELECTRIC MOTOR

※ **Electric motor with built-in three-phase thermal protection in the winding must be connected to the control panel.**
N.B. The warranty is valid if the thermal protection is connected to the control panel.

INCLUDES

※ Power cable length **10 m**

APPLICATION LIMITS

- Depth below water level up to **10 m** (with an appropriately sized power cable)
- Liquid temperature up to **+40 °C**
- Capable of processing suspended solids up to **Ø 80 mm**
- **For continuous service, the pump must not rise more than 290 mm**

AVAILABLE UPON REQUEST

※ Pumps equipped with internal probes that detect the presence of water in the oil chamber
※ Pumps with double cable for star/delta starting
※ Different voltage requirements 60 Hz frequency

CURVES AND PERFORMANCE DATA – n= 1450 min^{-1} 50 Hz

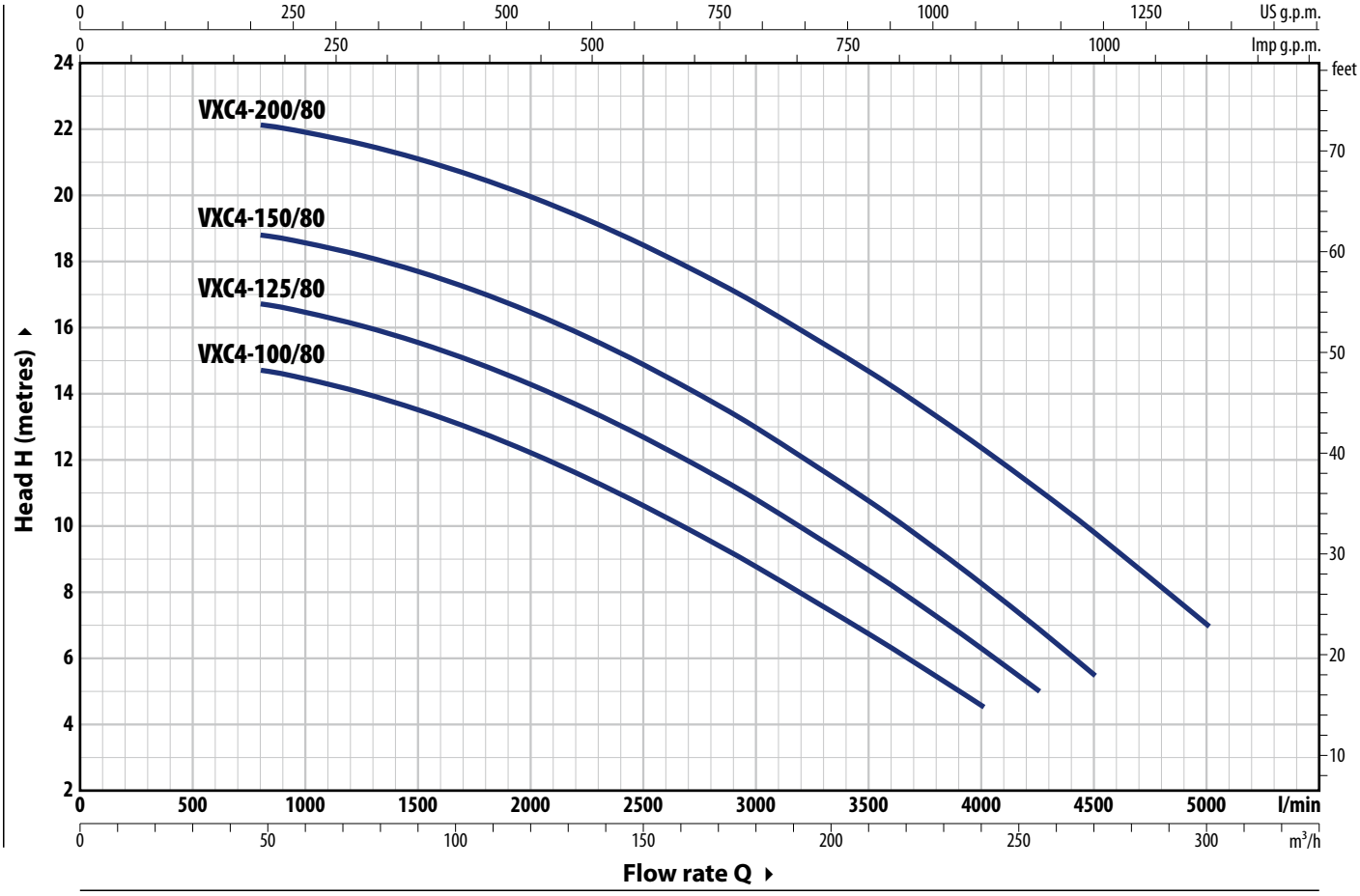

TYPE Three-phase	POWER (P2) kW	HP	Q m³/h	0	48	60	90	120	150	180	210	240	255	270	300
			Q l/min	0	800	1000	1500	2000	2500	3000	3500	4000	4250	4500	5000
VXC4-100/80	7.5	10	H metres	15	14.7	14.5	13.5	12.2	10.6	8.7	6.7	4.5			
VXC4-125/80	9.2	12.5		17	16.7	16.5	15.5	14.3	12.7	10.8	8.6	6.3	5		
VXC4-150/80	11	15		19	18.8	18.6	17.7	16.4	15	13	10.7	8.2	7	5.5	
VXC4-200/80	15	20		22.5	22.1	22	21	20	18.5	16.7	14.7	12.3	11	9.8	7

Q = Flow rate **H** = Total manometric head

Performance curves comply with EN ISO 9906 Grade 3B tolerance limits.

ABSORPTION

TYPE Three-phase	TENSIONE 230 V - Δ	400 V - ⅄	400 V - Δ	690 V - ⅄
VXC4-100/80	32.9 A	19.0 A	19.0 A	11.0 A
VXC4-125/80	36.3 A	21.0 A	21.0 A	12.1 A
VXC4-150/80	40.7 A	23.5 A	23.5 A	13.6 A
VXC4-200/80	49.3 A	28.5 A	28.5 A	16.5 A

DIMENSIONS AND WEIGHT

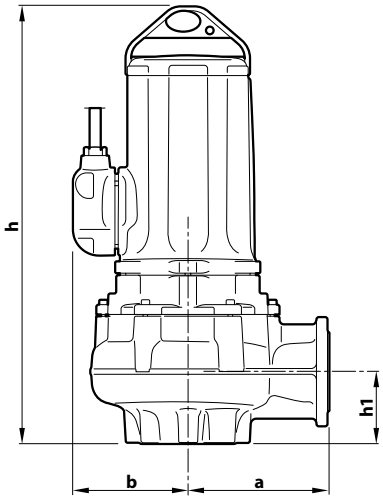

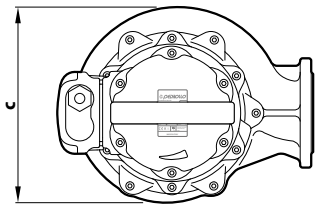

TYPE **Three-phase**	Passage of solid bodies	DIMENSIONS mm a	b	c	h	h1	kg 3~
VXC4-100/80	**Ø 80 mm**	285	228	395	858	130	215
VXC4-125/80							217
VXC4-150/80							227
VXC4-200/80							237

PORT FLANGE

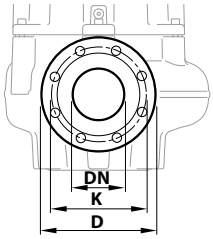

TYPE **Three-phase**	FLANGE **DN**	K mm	D mm	HOLES N°	Ø (mm)
VXC4-100/80 **VXC4-125/80** **VXC4-150/80** **VXC4-200/80**	**100** (PN10)	180	220	8	18

COUNTERFLANGE

(CAN BE ORDERED SEPARATELY)

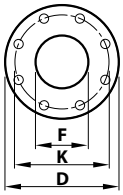

TYPE **Three-phase**	FLANGE **DN**	F	K mm	D mm	HOLES N°	Ø (mm)
VXC4-100/80 **VXC4-125/80** **VXC4-150/80** **VXC4-200/80**	**100**	4"	180	220	8	18

BASE

(CAN BE ORDERED SEPARATELY)

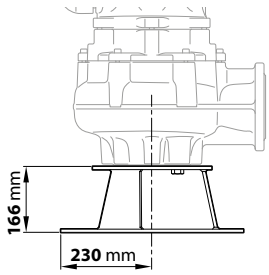

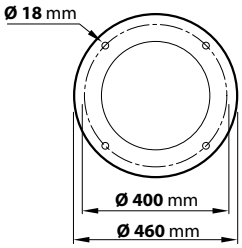

MATERIALS AND COMPONENTS

1	**Pump body**	Cast iron with cataphoresis treatment
2	**Impeller**	Cast iron VORTEX type with cataphoresis treatment
3	**Motor holder**	Cast iron
4	**Motor cover**	Cast iron
5	**Motor shaft**	Stainless steel **AISI 431**

6 Double mechanical seal with interposed oil chamber

Seal	Shaft	Location	Materials
MG1-43	Ø 43 mm	Motor side	Ceramic / Graphite / NBR
ARP-40	Ø 40 mm	Pump side	Silicon carbide/Silicon carbide/NBR

7 Electric Motor

Three-phase 230/400 V - 50 Hz or 400/690 V - 50 Hz
with winding integrated thermal three-phase motor protection to be connected to the control panel

– Insulation: class F
– Protection rating: IP X8

8 ※ Probe for detecting water in the oil chamber

9 Power cord

※ 10 metres '**EM2 quality**' type

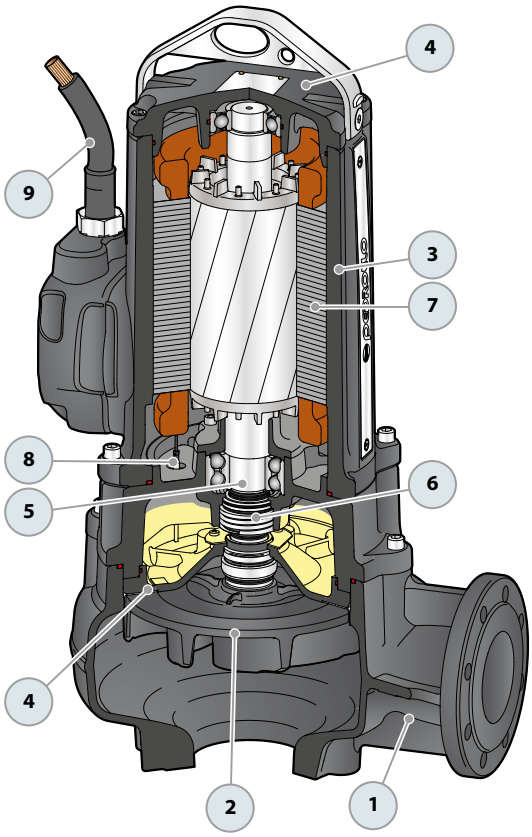

MC4 Submersible pumps - 4 POLES TWO-CHANNEL

Sewage
Civil use
Industrial use

※ Submersible pumps 4 poles (1450 min^{-1})

PERFORMANCE RANGE

- Flow rate up to **5000 l/min** (300 m^3/h)
- Head up to **28 m**

INSTALLATION AND USE

The **MC4** series is constructed from thick stainless steel and cast iron, offering exceptional robustness, abrasion resistance, and durability.
Equipped with a **TWO-CHANNEL** impeller, the pumps are designed to drain liquids containing suspended solids and short fibers, as well as **sewage, sludge-mixed water, groundwater, and surface water**. They are suitable for a wide range of applications, including apartment buildings, public facilities, industries, parking facilities, washing areas.

ELECTRIC MOTOR

※ **Electric motor with built-in three-phase thermal protection in the winding must be connected to the control panel.**
N.B. The warranty is valid if the thermal protection is connected to the control panel.

INCLUDES

※ Power cable length **10 m**

APPLICATION LIMITS

- Depth below water level up to **10 m** (with an appropriately sized power cable)
- Liquid temperature up to **+40 °C**
- Capable of processing suspended solids up to **Ø 80 mm**
- **For continuous service, the pump must not rise more than 290 mm**

AVAILABLE UPON REQUEST

※ Pumps equipped with internal probes that detect the presence of water in the oil chamber
※ Pumps with double cable for star/delta starting
※ Different voltage requirements 60 Hz frequency

CURVES AND PERFORMANCE DATA – n= 1450 min^{-1} 50 Hz

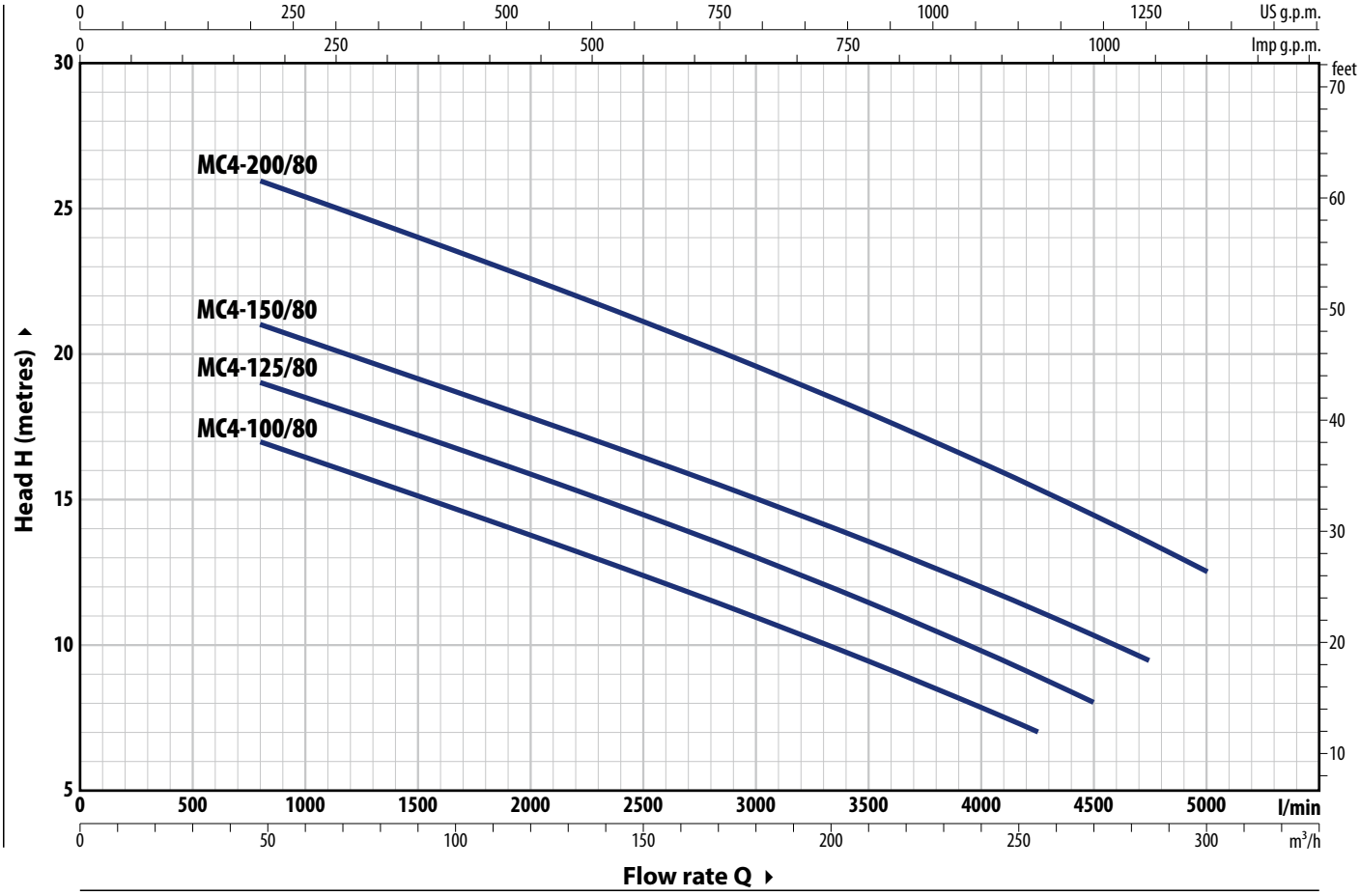

TYPE	POWER (P2)		Q m³/h	0	48	60	120	180	240	255	270	285	300
Three-phase	**kW**	**HP**	l/min	**0**	**800**	**1000**	**2000**	**3000**	**4000**	**4250**	**4500**	**4750**	**5000**
MC4-100/80	7.5	10	H metres	19	17	16.4	13.7	11	7.8	7			
MC4-125/80	9.2	12.5		21	19	18.5	15.8	13	9.8	9	8		
MC4-150/80	11	15		23.5	21	20.7	18	15.2	12.1	11.3	10.4	9.5	
MC4-200/80	15	20		28	26	25.3	22.5	19.5	16.2	15.3	14.4	13.5	12.5

Q = Flow rate **H** = Total manometric head

Performance curves comply with EN ISO 9906 Grade 3B tolerance limits.

ABSORPTION

TYPE	VOLTAGE			
Three-phase	**230 V - Δ**	**400 V - ⅄**	**400 V - Δ**	**690 V - ⅄**
MC4-100/80	29.4 A	17.0 A	17.0 A	9.8 A
MC4-125/80	34.6 A	20.0 A	20.0 A	11.6 A
MC4-150/80	38.1 A	22.0 A	22.0 A	12.7 A
MC4-200/80	49.3 A	28.5 A	28.5 A	16.5 A

DIMENSIONS AND WEIGHT

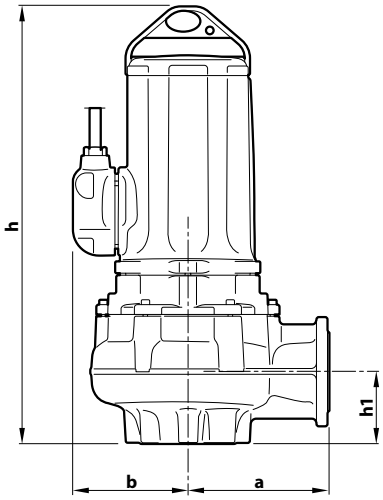

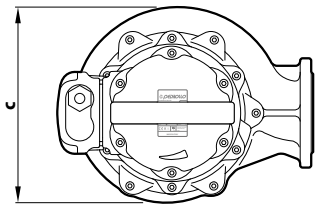

TYPE **Three-phase**	Passage of solid bodies	DIMENSIONS mm a	b	c	h	h1	kg 3~
MC4-100/80	**Ø 80 mm**	285	228	395	858	130	224
MC4-125/80							226
MC4-150/80							236
MC4-200/80							246

PORT FLANGE

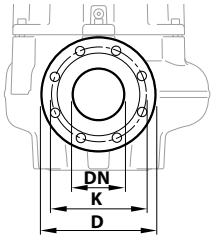

TYPE **Three-phase**	FLANGE **DN**	K mm	D mm	HOLES N°	HOLES Ø (mm)
MC4-100/80 **MC4-125/80** **MC4-150/80** **MC4-200/80**	**100** (PN10)	180	220	8	18

COUNTERFLANGE

(CAN BE ORDERED SEPARATELY)

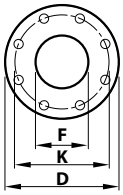

TYPE **Three-phase**	FLANGE **DN**	F	K mm	D mm	HOLES N°	HOLES Ø (mm)
MC4-100/80 **MC4-125/80** **MC4-150/80** **MC4-200/80**	**100**	4"	180	220	8	18

BASE

(CAN BE ORDERED SEPARATELY)

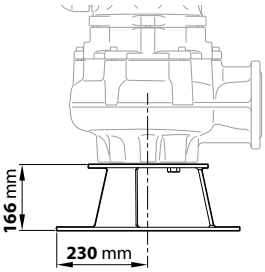

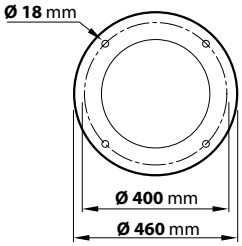

MATERIALS AND COMPONENTS

1	**Pump body**	Cast iron with cataphoresis treatment
2	**Impeller**	TWO-CHANNEL cast iron type with cataphoresis treatment
3	**Motor holder**	Cast iron
4	**Motor cover**	Cast iron
5	**Motor shaft**	Stainless steel **AISI 431**

6 **Double mechanical seal with interposed oil chamber**

Seal	Shaft	Location	Materials
MG1-43	Ø 43 mm	Motor side	Ceramic / Graphite / NBR
ARP-40	Ø 40 mm	Pump side	Silicon carbide/Silicon carbide/NBR

7 **Electric Motor**

Three-phase 230/400 V - 50 Hz or 400/690 V - 50 Hz
with winding integrated thermal three-phase motor protection to be connected to the control panel

– Insulation: class F
– Protection rating: IP X8

8 ※ **Probe for detecting water in the oil chamber**

9 **Power cord**

※ 10 metres '**EM2 quality**' type

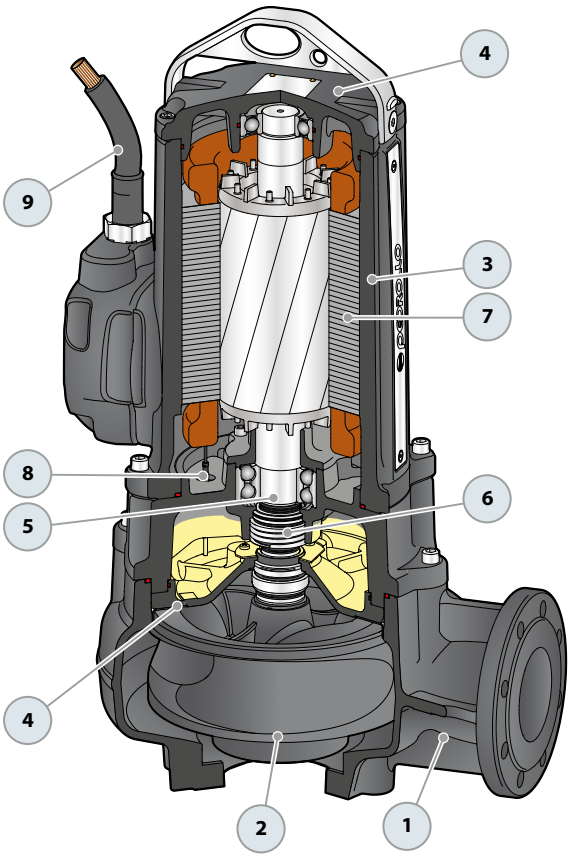

SEWAGE LIFTING SYSTEM VXC4 - MC4

VERSION WITH VERTICAL DELIVERY AND 2" GUIDE TUBES

For **VXC4, MC4**	Code ASSPVXC4V	DN **4"**

※ Kit consisting of:

Coupling foot complete with counterflange

Slide rail with screws and gasket

Support for guide tubes

ACCESSORIES AVAILABLE FOR ORDER

RUNNING GUIDE

※ For VXC4, MC4	Code ASSFL100

Complete with screws and seals

INTERMEDIATE GUIDE TUBE SUPPORT

※ For guide tubes Ø **2"**	Code 859SV349INTFA

For reasons of stability interpose a support every 3 metres

GUIDE TUBE (AISI 304 stainless steel)

※ 3 metres Ø 2" guide tube	Code 54SARTG0063F
※ 6 metres guide tube Ø 2"	Code 54SARTG0066F

Typical installation

1. Water pump
2. Pump Base
3. Guide Rails
4. Upper Guide Rail Support
5. Intermediate Guide Rail Support
6. Lifting chain
7. Control panel
8. Stop Float Switch
9. Start Float Switch
10. Supplementary pump start float switch
11. Alarm float
12. Check valve
13. Pump Pedestal

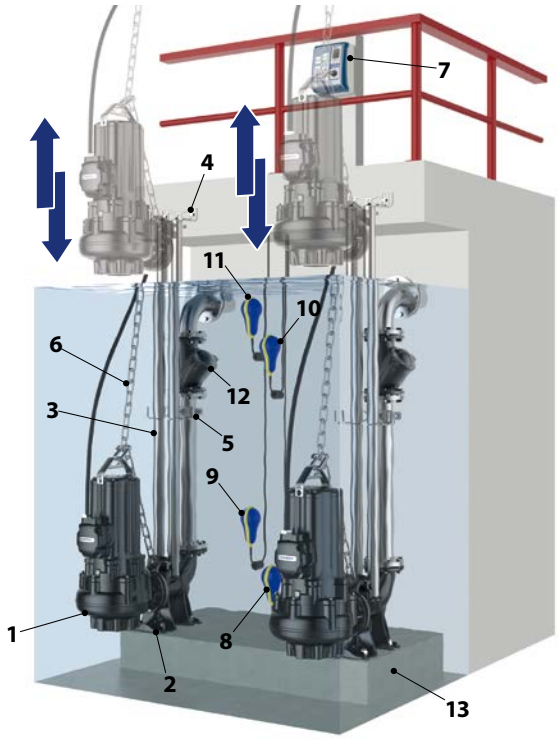

DIMENSIONS

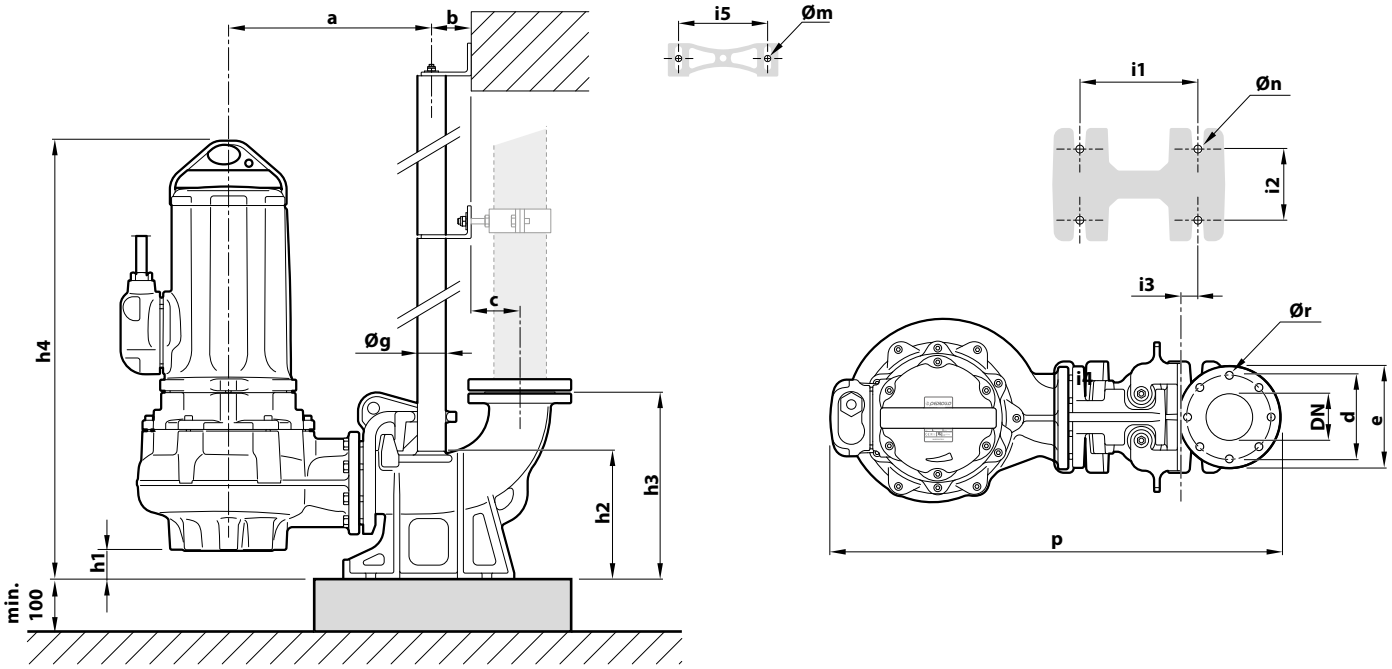

TYPE **Three-phase**	Passage of solid bodies mm	PORT **DN**	DIMENSIONS mm																	
			a	b	c	d	e	p	h1	h2	h3	h4	i1	i2	i3	i5	Øg	Øm	Øn	Ør
VXC4 /80 **MC4 /80**	**Ø 80 mm**	**100**	435	85.5	104.5	180	220	965	77	275	400	935	250	150	34	187	2"	13.5	22	18

SAR 40 Lift and collection stations

INSTALLATION AND USE

The **SAR 40** lift and collection stations are designed to handle clear water, rainwater, and wastewater from household drains like washing machines, dishwashers, and sinks, especially in situations where connection to the main sewer system is impractical or impossible due to distance or gravity constraints.

The **SAR 40** stations are compact and easy to install in basements, single-residence garages, or even underground

COMPONENTS INCLUDED

※ **40 litres** polyethylene tank with a non-walkable and non-driveable cover.

※ Single-phase submersible pump.

※ Standard **5-metres** power cable .

※ Swing check valve for models with drainage pumps only (for clear wastewater).

AVAILABLE UPON REQUEST

※ **SAR 40 lift station, equipped with a single-phase submersible pump with a float switch, based on your specific requirements.**

※ **10-metres** power cable.

※ Full-flow check valve (for external installation) designed for vortex and grinder pumps.

※ SAR 40 with grinder pump

TYPE	POWER (P2) kW	HP	MAXIMUM FLOW RATE litres/min	PREVALENCE MAX metres	
TRITUS-TX	**0.55**	**0.75**	**90**	**11.5**	

※ **Suitable for sewage**
※ Start of production 06.2024

※ SAR 40 with drainage pumps

TYPE	POWER (P2) kW	HP	MAXIMUM FLOW RATE litres/min	PREVALENCE MAX metres	
TOP 1 -GM	**0.25**	**0.33**	**160**	**6.0**	
RXm 1 -GM	**0.25**	**0.33**	**160**	**7.0**	

※ **Suitable for clear wastewater**

※ SAR 40 with vortex pumps

TYPE	POWER (P2) kW	HP	MAXIMUM FLOW RATE litres/min	PREVALENCE MAX metres	
TOP 2 VORTEX-GM	**0.37**	**0.50**	**155**	**7.0**	
TEX 2	**0.37**	**0.50**	**220**	**8.3**	

※ **Suitable for dirty waste water**

DIMENSIONS AND WEIGHT

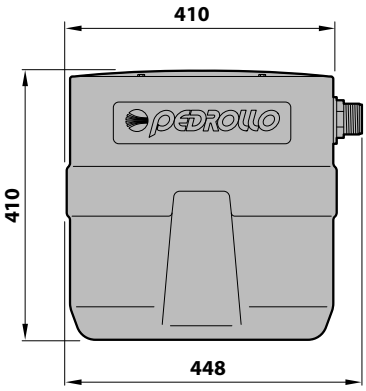

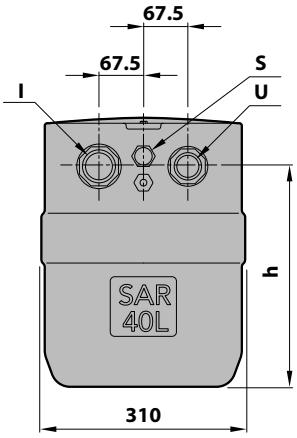

KEY:

I collection pipe connection
U discharge pipe connection
S ventilation pipe connection

TYPE	PORTS I[1]	PORTS U[1]	PORTS S[1]	h	kg
SAR 40 - TRITUS-TX	1½"	1¼"	½"	335	15.9
SAR 40 - TOP 1-GM				305	14.3
SAR 40 - RXm 1-GM					15.2
SAR 40 - TOP 2 VORTEX-GM				335	14.4
SAR 40 - TEX 2					15.0

[1] Male threaded connection

EXAMPLES OF INSTALLATION

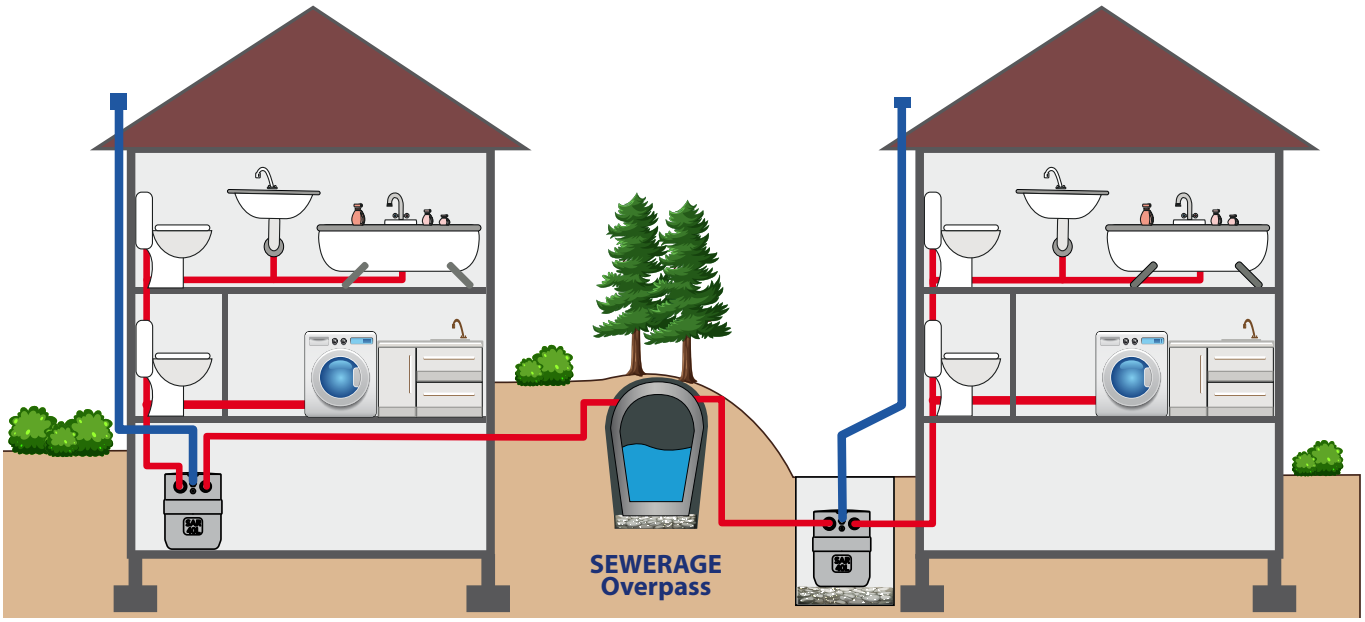

Surface installation **Underground installation**

SAR 100 Lift and collection stations

INSTALLATION AND USE

SAR 100 lift and collection stations are designed to handle clear water, rainwater, and wastewater from household drains like washing machines, dishwashers, sinks, and toilets, especially in situations where connection to the main sewer system is impractical or impossible due to distance or gravity constraints.

The **SAR 100** stations are compact and easy to install either on the floor or underground, both inside and outside of single or two-family homes.

COMPONENTS INCLUDED

※ **100 litres** polyethylene tank with a non-walkable and non-driveable cover.

※ Single-phase submersible pump.

※ Standard **10-metres** power cable.

※ Control panel (only for **SAR 100-TIGm 1.1** and **1.3**)

AVAILABLE UPON REQUEST

※ **SAR 100 lift station, equipped with a single-phase submersible pump with a float switch, based on your specific requirements**

※ SAR 100 with drainage pumps

TYPE	POWER (P2) kW	HP	MAXIMUM FLOW RATE litres/min	PREVALENCE MAX metres	
TOP 3	**0.55**	**0.75**	**260**	**10.0**	
RXm 3	**0.55**	**0.75**	**220**	**11.5**	
Dm 10	**0.75**	**1.0**	**300**	**15.5**	
Dm 20	**0.75**	**1.0**	**250**	**19.0**	

※ **suitable for clear wastewater**

※ SAR 100 with vortex pumps

TYPE	POWER (P2) kW	HP	MAXIMUM FLOW RATE litres/min	PREVALENCE MAX metres	
TOP 3-VORTEX	**0.55**	**0.75**	**170**	**8.2**	
RXm 3/20	**0.55**	**0.75**	**240**	**9.5**	
ZXm 2/30	**0.55**	**0.75**	**320**	**12.5**	
VXm 10/35	**0.75**	**1.0**	**400**	**10.0**	

※ **suitable for dirty waste water**

※ SAR 100 with grinder pumps (TRITUS)

TYPE	POWER (P2) kW	HP	MAXIMUM FLOW RATE litres/min	PREVALENCE MAX metres	
TIGm 0.55	**0.55**	**0.75**	**130**	**14.5**	
TIGm 0.75	**0.75**	**1.0**	**140**	**17.5**	
TIGm 1.1	**1.1**	**1.5**	**150**	**22.5**	
TIGm 1.3	**1.3**	**1.75**	**250**	**20.5**	

※ **suitable for sewage water**

DIMENSIONS AND WEIGHT

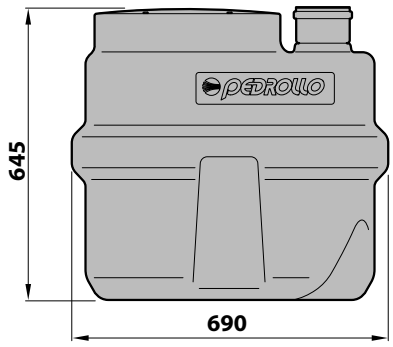

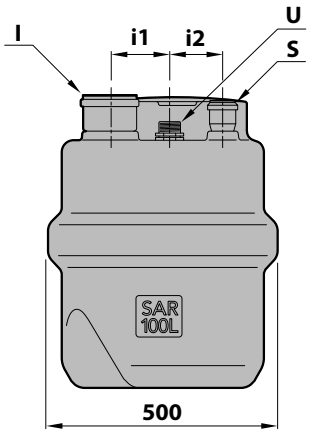

KEY:

I collection pipe port

U discharge pipe connection

S ventilation pipe port

TYPE	PORTS I	U(1)	S	i1	I2	kg
SAR 100 - TOP 3	DN 110	1¼"	DN 50	145	100	29.0
SAR 100 - RXm 3		1¼"				29.9
SAR 100 - Dm 10		1½"				36.3
SAR 100 - Dm 20		1½"				36.3
SAR 100 - TOP 3-VORTEX		1¼"				29.1
SAR 100 - RXm 3/20		1¼"				30.0
SAR 100 - ZXm 2/30		1½"				33.1
SAR 100 - VXm 10/35		1½"				37.5
SAR 100 - TIGm 0.55		1½"				38.2
SAR 100 - TIGm 0.75		1½"				38.3
SAR 100 - TIGm 1.1		1½"				40.6
SAR 100 - TIGm 1.3		1½"				40.6

(1) Male threaded connection

SAR 250 Lift and collection stations

INSTALLATION AND USE

SAR 250 lift and collection stations are designed to handle clear water, rainwater, and wastewater from household and civil drains like washing machines, dishwashers, sinks, and toilets, especially in situations where connection to the main sewer system is impractical or impossible due to distance or gravity constraints.

SAR 250 stations are compact and easy to install, suitable for floor or underground placement, both indoors and outdoors of multi-unit buildings.

COMPONENTS INCLUDED

※ **SAR 250** polyethylene tank with a non-driveable cover that can support pedestrian traffic up to a maximum of 100 kg.

※ Single-phase submersible pump.

※ Control panel (only for **SAR 250-TIGm 1.1** and **1.3**).

※ Standard **10-metres** power cable.

AVAILABLE UPON REQUEST

※ **SAR 250 lift station, equipped with a single-phase submersible pump with a float switch, based on your specific requirements.**

※ Three-phase submersible pump

※ **Alarm kit** (Code: KSKIT-ALLARME) equipped with control panel, self-powered siren, and float

※ **300 mm extension kit** (Code No. KSKIT-308MA) for installing the "SAR" tank at greater depths

※ "SAR" Stations with check valve and ball valve in the discharge pipe.

※ SAR 250 with drainage pumps

TYPE	POWER (P2) kW	HP	MAXIMUM FLOW RATE litres/min	PREVALENCE MAX metres	
TOP 3	**0.55**	**0.75**	**260**	**10.0**	
TOP 4	**0.75**	**1.0**	**320**	**12.5**	
TOP 5	**0.92**	**1.25**	**360**	**15.0**	
RXm 3	**0.55**	**0.75**	**220**	**11.5**	
Dm 10	**0.75**	**1.0**	**300**	**15.5**	
Dm 20	**0.75**	**1.0**	**250**	**19.0**	
Dm 30	**1.1**	**1.5**	**275**	**26.0**	

※ suitable for clear wastewater

※ SAR 250 with VORTEX pumps

TYPE	POWER (P2) kW	HP	MAXIMUM FLOW RATE litres/min	PREVALENCE MAX metres	
RXm 3/20	**0.55**	**0.75**	**240**	**9.5**	
ZXm 2/40	**0.55**	**0.75**	**400**	**11**	
VXm 10/35	**0.75**	**1**	**400**	**10**	
VXm 15/35	**1.1**	**1.5**	**500**	**13.5**	
VXm 15/50	**1.1**	**1.5**	**650**	**11**	

※ suitable for dirty waste water

※ SAR 250 with grinder pumps (TRITUS)

TYPE	POWER (P2) kW	HP	MAXIMUM FLOW RATE litres/min	PREVALENCE MAX metres	
TIGm 0.75	**0.75**	**1.0**	**140**	**17.5**	
TIGm 1.1	**1.1**	**1.5**	**150**	**22.5**	
TIGm 1.3	**1.3**	**1.75**	**250**	**20.5**	

※ **suitable for sewage water**

DIMENSIONS AND WEIGHT

TYPE	PORTS I	U(1)	S	kg
SAR 250 - TOP 3		1¼"		49.7
SAR 250 - TOP 4		1½"		53.3
SAR 250 - TOP 5		1½"		54.3
SAR 250 - RXm 3		1¼"		50.6
SAR 250 - Dm 10		1½"		57.0
SAR 250 - Dm 20		1½"		57.0
SAR 250 - Dm 30		1½"		60.4
SAR 250 - RXm 3/20	DN 110	1¼"	DN 50	50.7
SAR 250 - ZXm 2/40		1½"		53.8
SAR 250 - VXm 10/35		1½"		58.2
SAR 250 - VXm 15/35		1½"		61.0
SAR 250 - VXm 15/50		2"		61.5
SAR 250 - TIGm 0.75		1½"		59.0
SAR 250 - TIGm 1.1		1½"		61.3
SAR 250 - TIGm 1.3		1½"		61.3

(1) Male threaded connection

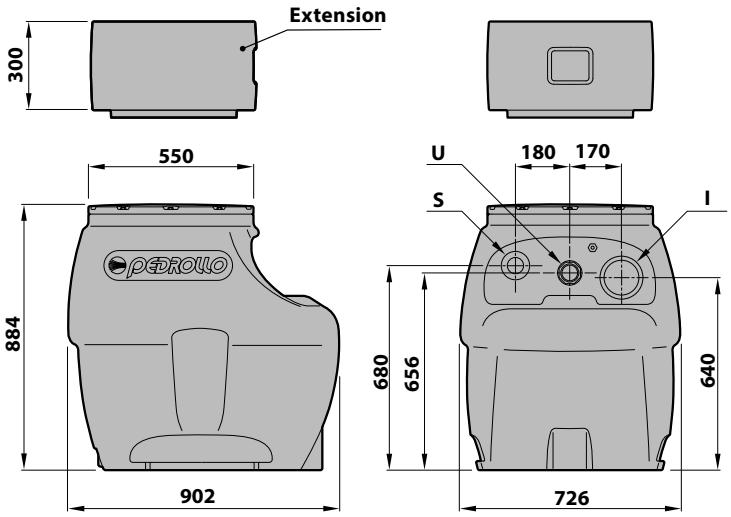

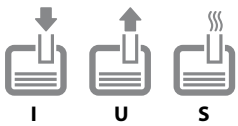

KEY:
- **I** collection pipe port
- **U** discharge pipe connection
- **S** ventilation pipe port

SAR 550 Lift and collection stations

INSTALLATION AND USE

The **SAR 550** lift and collection stations are designed to handle clear water, rainwater, or dirty water from civil and industrial drains, where the sewer network is too far away or not accessible by gravity.
The **SAR 550** stations are compact and easy to install on the floor or underground, both indoors and outdoors of residential buildings, offices, public establishments, courtyards, and parking facilities, for sewage or rainwater disposal.

COMPONENTS INCLUDED

※ **550 litres** polyethylene tank with a non-driveable cover that can support pedestrian traffic up to a maximum of 100 kg.
※ **Two single-phase pumps (without float switches) pre-installed and already connected to a control panel.**
※ Standard **10-metres** power cable .
※ Control panel (**E2** model).
※ Three float switches with the following functions:
1) Alternating activation of one of the two pumps
2) Activation of the second pump at maximum level
3) Shutdown of the pump at minimum level

AVAILABLE UPON REQUEST

※ **SAR 550 lift station, equipped with two single-phase pumps, based on your specific requirements.**
※ **Three-phase submersible pump.**

OPTIONAL

※ **Alarm kit** (Code: KSKIT-ALLARME) equipped with control panel, self-powered siren, and float
※ **300 mm extension kit** (Code No. KSKIT-308MA) for installing the "SAR" tank at greater depths
※ "SAR" Stations with check valve and ball valve in the discharge pipe

※ SAR 550 with drainage pumps

TYPE	POWER (P2) kW	POWER (P2) HP	MAXIMUM FLOW RATE [1] pump litres/min	PREVALENCE MAX metres	
TOP 4	**0.75**	**1**	**320**	**12.5**	
TOP 5	**0.92**	**1.25**	**360**	**15**	
Dm 10	**0.75**	**1**	**300**	**15.5**	
Dm 20	**0.75**	**1**	**250**	**19**	
Dm 30	**1.1**	**1.5**	**275**	**26**	

※ suitable for clear wastewater

※ SAR 550 with VORTEX pumps

TYPE	POWER (P2) kW	POWER (P2) HP	MAXIMUM FLOW RATE [1] pump litres/min	PREVALENCE MAX metres	
VXm 10/35	**0.75**	**1**	**400**	**10**	
VXm 15/35	**1.1**	**1.5**	**500**	**13.5**	
VXm 10/50	**0.75**	**1**	**550**	**8.5**	
VXm 15/50	**1.1**	**1.5**	**650**	**11**	
BCm 10/50	**0.75**	**1**	**600**	**11**	
BCm 15/50	**1.1**	**1.5**	**750**	**14**	

※ suitable for dirty waste water

※ SAR 550 with grinder pumps (TRITUS)

TYPE	POWER (P2) kW	POWER (P2) HP	MAXIMUM FLOW RATE [1] pump litres/min	PREVALENCE MAX metres	
TIGm 0.75	**0.75**	**1**	**140**	**17.5**	
TRm 0.9	**0.9**	**1.25**	**170**	**15**	
TRm 1.1	**1.1**	**1.5**	**140**	**21.5**	
TRm 1.3	**1.3**	**1.75**	**220**	**22.5**	
TRm 1.5	**1.5**	**2**	**270**	**25**	

※ suitable for sewage water

(*) On request "SAR" stations with coupling feet and guide pipes for pump descent

DIMENSIONS AND WEIGHT

TYPE	PORTS I	PORTS U(1)	PORTS S	kg
SAR 550 - TOP 4	DN 110	1½"	DN 50	109.0
SAR 550 - TOP 5		1½"		110.9
SAR 550 - Dm 10		1½"		116.4
SAR 550 - Dm 20		1½"		116.4
SAR 550 - Dm 30		1½"		123.2
SAR 550 - VXm 10/35		1½"	DN 75	118.8
SAR 550 - VXm 15/35		1½"		124.4
SAR 550 - VXm 10/50		2		119.8
SAR 550 - VXm 15/50		2		125.4
SAR 550 - BCm 10/50		2		120.8
SAR 550 - BCm 15/50		2		126.0
SAR 550 - TIGm 0.75		1½"	DN 50	120.4
SAR 550 - TRm 0.9		1¼"		136.4
SAR 550 - TRm 1.1		1¼"		139.7
SAR 550 - TRm 1.3		1¼"		139.4
SAR 550 - TRm 1.5		1½"		178.4

(1) Male threaded connection

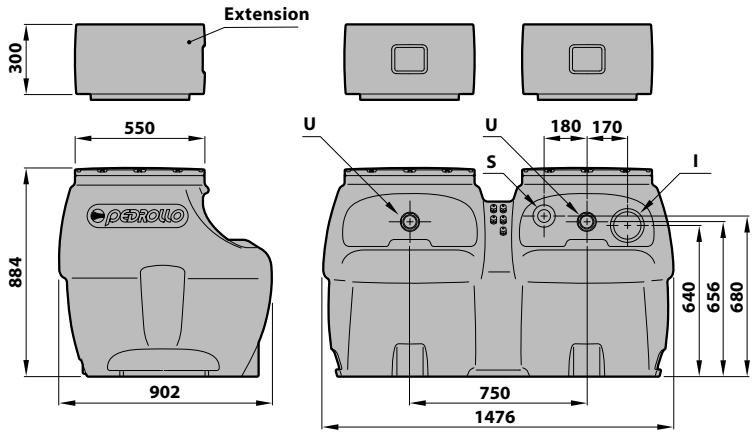

Only for TR versions with coupling feet

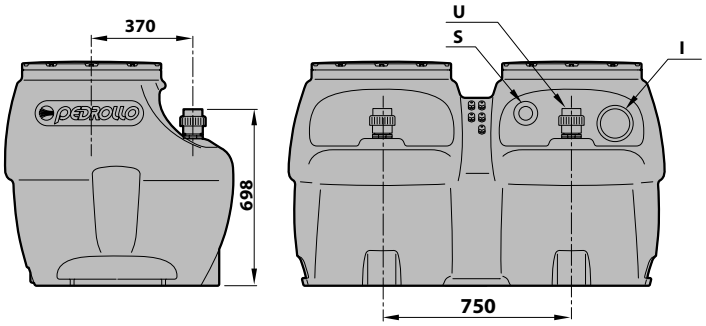

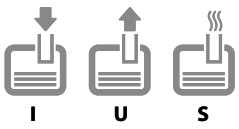

KEY:

I collection pipe port

U discharge pipe connection

S ventilation pipe port

EASYPUMP Pumps with electronic control device

Domestic use

FUTURE JET-EP

INSTALLATION AND USE

EASYPUMP is a ready-to-use and easy-to-install pressurization system, designed to increase water pressure for residential use or irrigation purposes.

EASYPUMP features a single-phase pump paired with an electronic control unit, known as EASYPRESS.
EASYPRESS ensures automatic activation or deactivation of the pump based on water consumption, offering protection against dry running and system leaks. it also has an integrated non-return valve and a micro-accumulator that allows operation without the need for an expansion tank.

EASYPUMP activates automatically when the system's pressure drops below the preset threshold (**1.5 bar**) and continues to run as long as water is flowing**.**

COMPONENTS INCLUDED

- ※ **Single-phase pump**
- ※ **EASYPRESS electronic control device with 1.5 bar restart pressure**
- ※ **GSR quick-connect coupling**
- ※ **1.5 metres cable with Schuko plug**

EXAMPLES OF INSTALLATION

※ To minimize frequent restarts resulting from brief usage or system leaks, it is advisable to install an expansion tank pre-filled to **1.2 bar** (e.g., tank **1SF**).

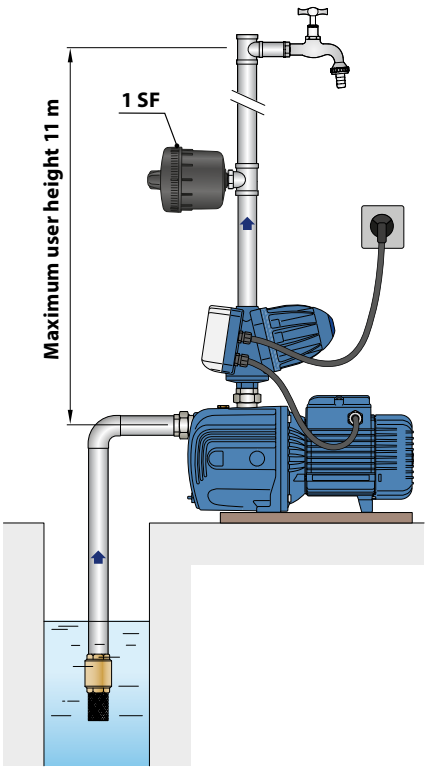

TYPE **Single-phase**	**POWER (P2)** **kW**	 **HP**	**Q** l/min	**H** metres
3CPm 80-EP	0.45	0.60	5 – 80	38 – 5
4CPm 80-EP	0.55	0.75	5 – 80	50 – 10
4CPm 100-EP	0.75	1	5 – 130	50 – 5
3CRm 80-EP	0.45	0.60	5 – 80	38 – 5
4CRm 80-EP	0.55	0.75	5 – 80	50 – 10
4CRm 100-EP	0.75	1	5 – 130	50 – 5
CPm 158-EP	0.75	1	10 – 90	34 – 25
FUTURE JETm 2C - EP	0.75	1	5 – 120	52 – 10
FUTURE JETm 2A - EP	0.90	1.25	5 – 120	56 – 13.7
JCRm 2C - EP	0.75	1	5 – 70	51 – 24
JCRm 2A - EP	0.90	1.25	5 – 70	55 – 28
PLURIJETm 3/80-EP	0.48	0.65	5 – 80	38 – 5
PLURIJETm 4/80-EP	0.55	0.75	5 – 80	50 – 10
PLURIJETm 4/100-EP	0.75	1	5 – 130	50 – 5

HYDROFRESH 24 CL

INSTALLATION AND USE

The **HYDROFRESH** group is designed for residential water supply or irrigation purposes and is available with a **24 litres** or a **60 litres** horizontal expansion tank. This cost-effective, ready-to-use system improves pressurization through two key features:

- an **expansion tank** designed to reduce the number of times the pump needs to turn on and counteract any loss of water pressure that occurs when you open a faucet
- a **pressure switch** that automatically controls the pump operation

TYPE	POWER (P2) kW	POWER (P2) HP	CAPACITY litres	FLOW RATE (1) litres/min	CALIBRATION (2) bar
HYDROFRESH 24 CL					
FUTURE JETm 1A - **24 CL**	0.55	0.75	**24**	90	1.2 – 3.2
FUTURE JETm 2C - **24 CL**	0.75	1	**24**	110	1.2 – 3.2
FUTURE JETm 1A-ST - **24 CL**	0.55	0.75	**24**	90	1.2 – 3.2
FUTURE JETm 2C-ST - **24 CL**	0.75	1	**24**	110	1.2 – 3.2
HYDROFRESH 60 CL					
FUTURE JETm 1A - **60 CL**	0.55	0.75	**60**	90	1.2 – 3.2
FUTURE JETm 2C - **60 CL**	0.75	1	**60**	110	1.2 – 3.2
FUTURE JETm 1A-ST - **60 CL**	0.55	0.75	**60**	90	1.2 – 3.2
FUTURE JETm 2C-ST - **60 CL**	0.75	1	**60**	110	1.2 – 3.2

(1) Maximum flow rate corresponding to the minimum set pressure of the pressure switch
(2) Pressure switch calibration (recommended)

COMPONENTS INCLUDED

- ※ **Single-phase pump**
- ※ **Expansion tank**
- ※ **PSG-1 pressure switch**
- ※ **Pressure Gauge**
- ※ **Flexible hose**
- ※ **Brass fitting**
- ※ **1.5 metres cable with Schuko plug**

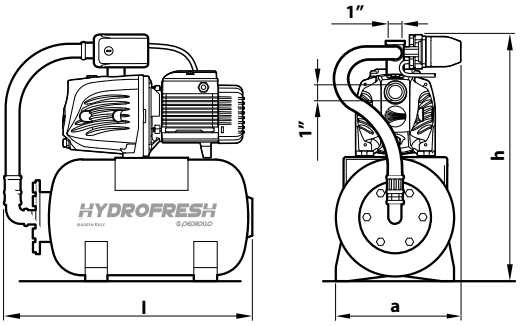

DIMENSIONS AND WEIGHT

HYDROFRESH 24 CL	DIMENSIONS mm l	DIMENSIONS mm a	DIMENSIONS mm h	WEIGHT kg
FUTURE JETm 1A - **24 CL**	535	255	520	**18.7**
FUTURE JETm 2C - **24 CL**			530	**22.0**
FUTURE JETm 1A-ST - **24 CL**			560	**15.8**
FUTURE JETm 2C-ST - **24 CL**			570	**19.2**
HYDROFRESH 60 CL				
FUTURE JETm 1A - **60 CL**	730	340	657	**23.7**
FUTURE JETm 2C - **60 CL**			675	**27.0**
FUTURE JETm 1A-ST - **60 CL**	730	340	678	**20.8**
FUTURE JETm 2C-ST - **60 CL**			703	**24.2**

DG-BLU

Automatic pressurization system with inverter

Clean water

Domestic use

Civil use

PRODUCT DESCRIPTION

DG-BLU is a cutting-edge, automatic pressurization system featuring a high-efficiency, self-priming pump with multiple impellers. It comes complete with a storage tank, pressure and flow sensors, and a check valve, all designed to work quietly and efficiently**.**

This compact powerhouse stands out for its advanced electronic inverter control, which intelligently manages the system performance by:

- keeping the pressure constant according to water usage;
- monitoring hydraulic and electrical conditions to safeguard against malfunctions;
- allowing for integration with another DG-BLU unit through an optional expansion card;
- adapting seamlessly to any type of pressurization system, even existing ones;
- reducing electrical consumption with lower startup and running currents, achieving greater energy efficiency.

INSTALLATION AND USE

※ **DG-BLU** is designed to cater to the needs of single and two-family homes.

※ **DUAL-DG-BLU** units are pre-assembled pump systems, perfectly suited for multi-unit residences.

TECHNICAL DATA

※ Power supply: **1~ 230 V** ± 10%

※ Frequency: **50/60 Hz**

※ Insulation: **class F**

※ Maximum current absorbed:
- **7.5 A** DG-BLU 3
- **10 A** DG-BLU 5

※ Maximum power input P1:
- **1.0 kW** DG-BLU 3
- **1.5 kW** DG-BLU 5

※ Protection rating: **IP X4**

※ Set point from the factory: **3 bar**

※ 1.5 metres cable with Schuko plug

APPLICATION LIMITS

- Manometric suction head up to **8 m**
- Liquid temperature between **0 °C** and **+40 °C**
- Ambient temperature between 0 °C and **+40 °C**
- Max. port pressure **4 bar**
- Max pressure **10 bar**
- Continuous running duty **S1**

PATENTS - TRADE MARKS - MODELS

- Registered community model No. 015048622-0001

CERTIFICATIONSIN PROGRESS

WRAS APPROVED PRODUCT · ATTESTATION DE CONFORMITE SANITAIRE ACS · NSF Certified to NSF/ANSI 61 & 372 · C US

 ※ **Start of production 06.2024** ※

PERFORMANCE CURVES

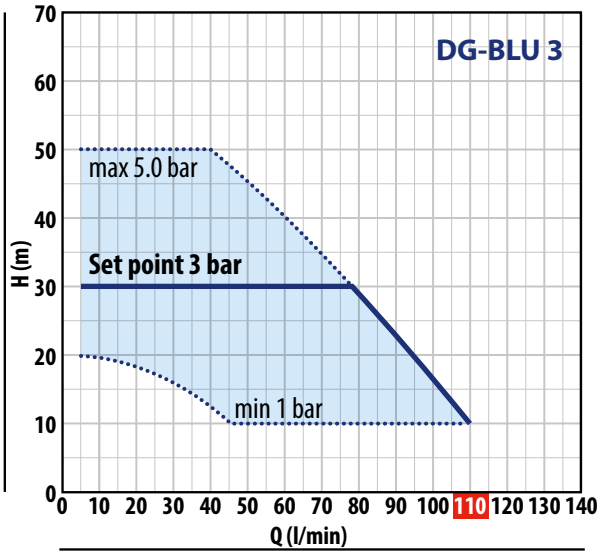

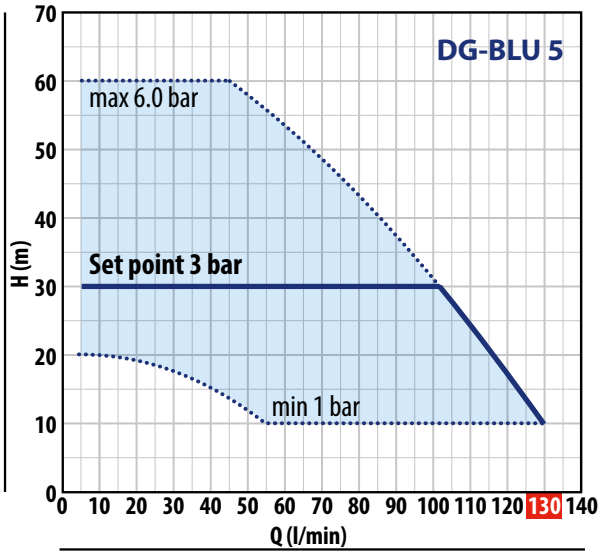

TYPE	POWER P2			PERFORMANCE		PERFORMANCE (ADJUSTABLE SET POINT)					
				Q	H	Set Point Min		Set Point Calibration Std		Set Point Max	
Single-phase	**kW**	**HP**	▲	l/min	metres	bar	l/min	bar	l/min	bar	l/min
DG-BLU 3	0.75	1	IE3	5 – **110**	50 – 10	1.0	45 – **110**	**3.0**	5 – **79**	5.0	5 – 40
DG-BLU 5	1.1	1.5		5 – **130**	60 – 10	1.0	55 – **130**	**3.0**	5 – **102**	6.0	5 – 45

Q = Flow rate **H** = Total manometric head ▲Efficiency three-phase motor (IEC 60034-30-1)

PERFORMANCE CURVES FOR A GROUP OF TWO DG-BLU UNITS

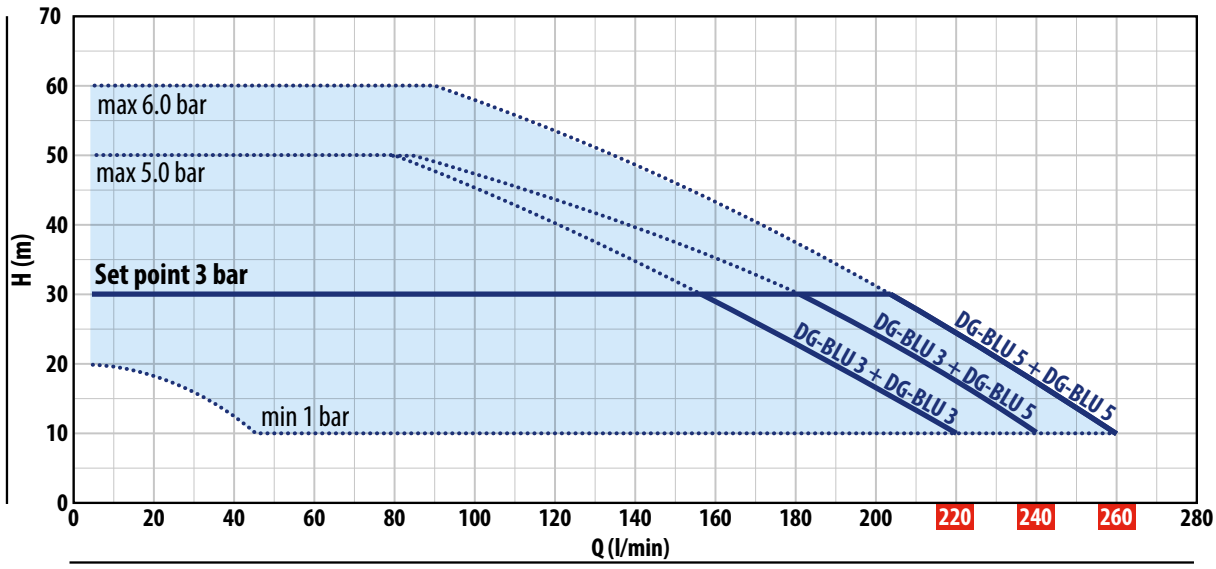

TYPE	POWER P2			PERFORMANCE		PERFORMANCE (ADJUSTABLE SET POINT)					
				Q	H	Set Point Min		Set Point Calibration Std		Set Point Max	
Single-phase	**kW**	**HP**	▲	l/min	metres	bar	l/min	bar	l/min	bar	l/min
DUAL DG-BLU 3+3	0.75+0.75	1+1	IE3	5 – **220**	50 – 10	1.0	45 – **220**	**3.0**	5 – **158**	5.0	5 – **80**
DUAL DG-BLU 3+5	0.75+1.1	1+1.5		5 – **240**	50 – 10	1.0	45 – **240**	**3.0**	5 – **181**	5.0	5 – **85**
DUAL DG-BLU 5+5	1.1+1.1	1.5+1.5		5 – **260**	60 – 10	1.0	55 – **260**	**3.0**	5 – **204**	6.0	5 – **90**

Q = Flow rate **H** = Total manometric head
▲Three-phase motor efficiency (IEC 60034-30-1)

Performance curves comply with EN ISO 9906 Grade 3B tolerance limits.

DG-BLU

KEY FEATURES

ALL IN ONE
- Self-priming multistage pump
- Frequency inverter
- Expansion tank
- Check valve
- Pressure and flow sensor

INSTALLABLE ANYWHERE
Thanks to its compactness, quiet operation, and 360° adjustable connections, DG-BLU can be installed anywhere

QUIET

COMPACT

CONSTANT PRESSURE

EASY TO USE

TYPICAL INSTALLATION

ABOVE GROUND
(drawing from a shallow tank or well)

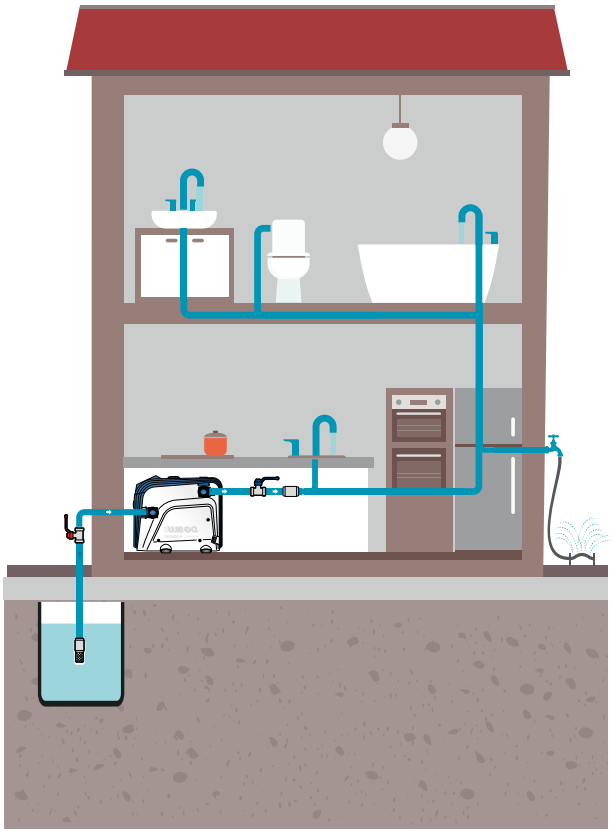

BELOW GROUND
(tank or aqueduct)

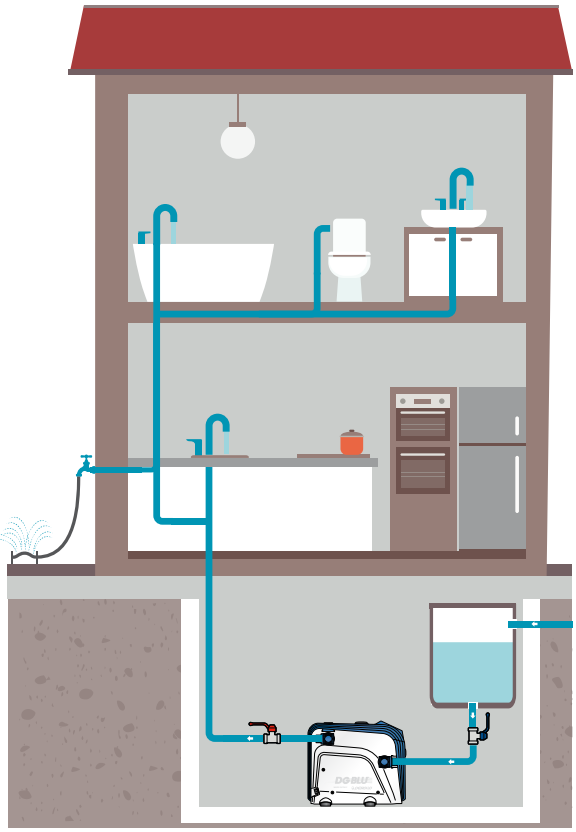

DIMENSIONS AND WEIGHTS (mm)

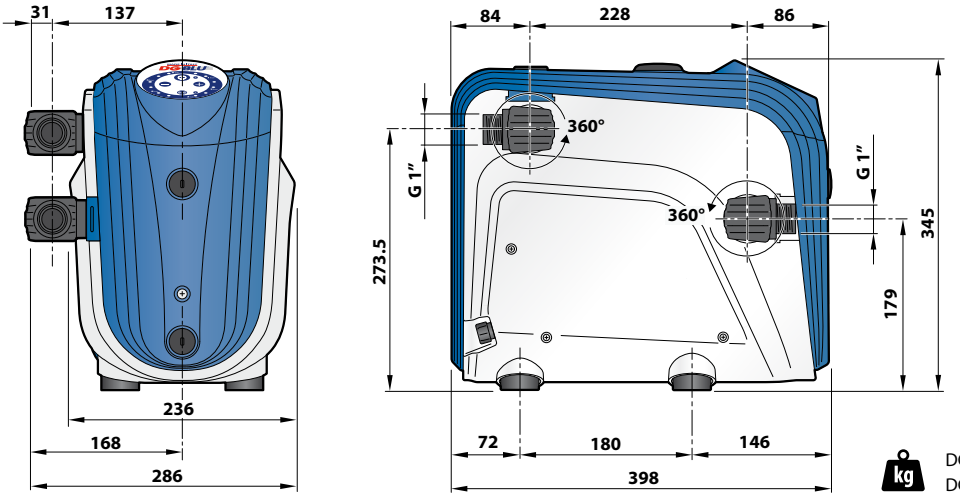

DG-BLU 3: **15 kg**
DG-BLU 5: **16 kg**

DUAL DG-BLU DIMENSIONS AND WEIGHTS (mm)

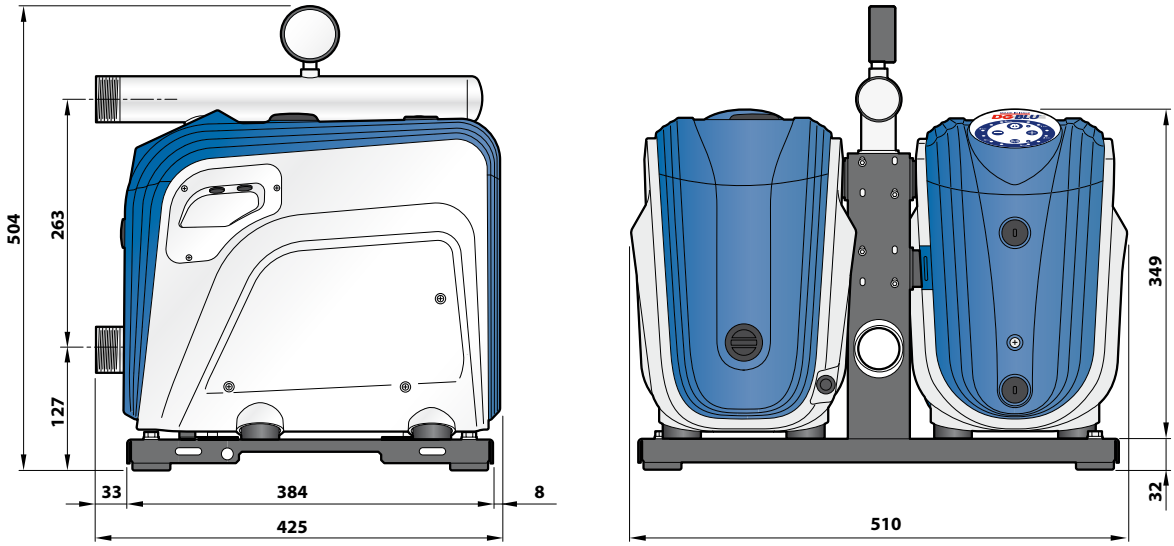

DUAL DG-BLU 3+3: **43 kg**
DUAL DG-BLU 3+5: **44 kg**
DUAL DG-BLU 5+5: **45 kg**

OPTIONAL ACCESSORIES

Connection kit for two DG-BLU units

Electronic expansion board

Kit for wall installation of a single DG-BLU

Wall installation kit of a two-unit group

EASYSMALL Automatic control device

Clean water Domestic use

INSTALLATION AND USE

EASYSMALL is a compact and **cost-effective** electronic control and protection device for single-phase domestic pumps with power up to **1.5 HP**.

PRODUCT DESCRIPTION

※ **EASYSMALL** features a pressure sensor and a flow sensor linked to an electronic system that automatically activates the pump when a faucet's opening lowers the pressure below a specified level and deactivates it when the flow stops or dips under **2 l/min**.

※ **EASYSMALL** is also equipped with:
- a pressure gauge for immediate pressure readings;
- an integrated and inspectable check valve;
- Two outlets to fit existing systems and to allow for the installation of a small expansion tank, ensuring better operation (**1SF**).

EASYSMALL's integrated electronics protect the pump from:

※ Dry running
※ frequent starts due to leaks in the system;
※ lockout due to system inactivity.

DIMENSIONS AND WEIGHT

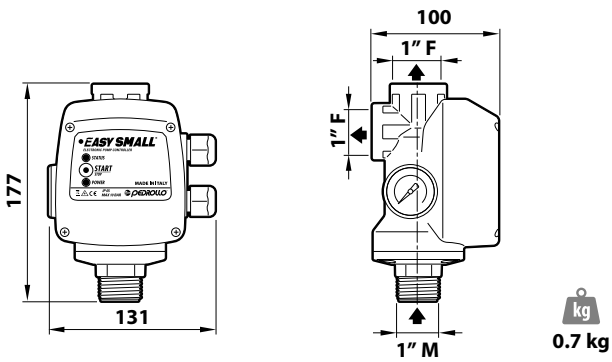

TECHNICAL DATA

TYPE	P2		Power supply		Continuous duty current
Single-phase	kW	HP	Volt	Hz	
EASYSMALL	1.1	1.5	230	50/60	10 A

PERFORMANCE RANGE

※ Restart pressure: **1.5 bar**
※ Max load capacity: **120 l/min** (7.2 m³/h)

APPLICATION LIMITS

※ Liquid temperature up to **+50 °C**
※ Ambient temperature up to **+40 °C**
※ Maximum operating pressure **10 bar**
※ Protection rating: **IP 65**

ACCESSORIES

※ **1SF 1 litre(1" M) technopolymer tank**

※ **GSR** Special three-piece coupling with o-ring seal (**1"**)

PATENTS - TRADE MARKS - MODELS

※ Registered Community Model No. 001774928
※ EASYSMALL® registered trademark No. 0001511131

ADJUSTMENT

To avoid frequent restarts due to possible microleaks in the system and for greater energy savings, the **1SF** tank should be installed with a precharge of **1.2 bar**.

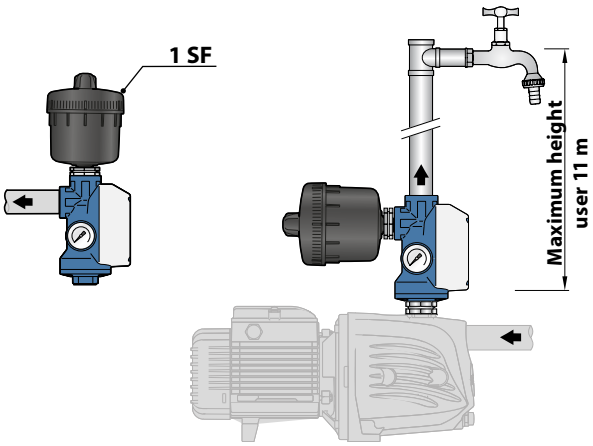

EASYPRESS Automatic control device

Clean water Domestic use

TECHNICAL DATA

TYPE Single-phase	P2 kW	P2 HP	Power supply Volt	Power supply Hz	Continuous duty current
EASYPRESS	1.5	2	230	50/60	13 A

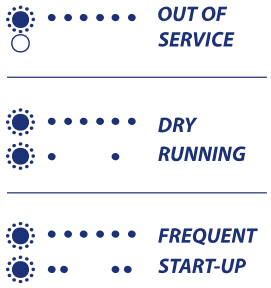

The **EASYPRESS** features 2 LED indicators to show the system's operating status and alerting to any issues through blinking patterns. A guide on the user interface helps to identify specific problems indicated by the LEDs..

PERFORMANCE RANGE

※ Restart pressure: **1.5 bar**
※ Maximum volume capacity: **170 l/min** (10 m³/h)

INSTALLATION AND USE

EASYPRESS is a durable and reliable electronic device designed to control and safeguard single-phase domestic pumps with a power capacity up to **2 HP**.

PRODUCT DESCRIPTION

※ **EASYPRESS** features a pressure sensor and a flow sensor linked to an electronic system that automatically activates the pump when a faucet's opening lowers the pressure below a specified level and deactivates it when the flow stops or dips under **2 l/min**.

※ **The EASYPRESS** is equipped with:
- Circuit board
- Pressure Gauge
- Integrated micro-accumulation enables operation even without an expansion tank, though the use of a **1SF tank is recommended**.

The integrated electronics protect the pump from:
※ dry running
※ frequent start-ups due to leaks in the system;
※ lockout due to plant inactivity.

APPLICATION LIMITS

※ Liquid temperature up to **+55 °C**
※ Ambient temperature up to **+40 °C**
※ Maximum operating pressure **10 bar**
※ Protection rating: **IP 65**

PATENTS - TRADE MARKS - MODELS

※ Registered Community Model No. 868062
※ Patent No. IT 1388969, IT 1388970
※ EASYPRESS® registered trademark No. 0001334481

ACCESSORIES

※ **GSR** Special three-piece coupling with o-ring seal (**1"**)

GSR

AVAILABLE UPON REQUEST

※ **EASYPRESS** version with **0.8 bar** restart pressure
※ **EASYPRESS** version with restart pressure **2.2 bar**
※ Version with power cable with Schuko plug and motor pump connection cable

DIMENSIONS AND WEIGHT

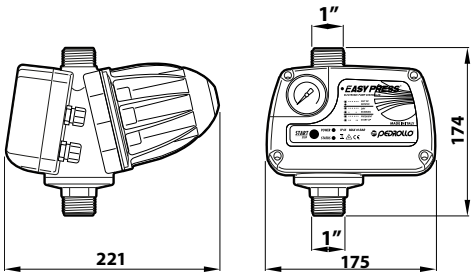

kg 1.63 kg

Maximum user height

Version **2.2 bar** = **18 m**

Version **1.5 bar** = **11 m**

Version **0.8 bar** = **5 m**

Typical installation

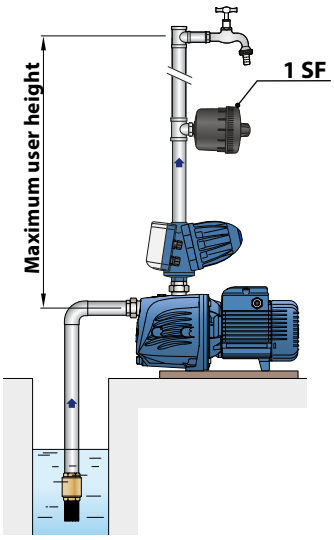

PRESFLO VARIO Automatic control device

Clean water Domestic use

TECHNICAL DATA

TYPE Single-phase	P2 kW	P2 HP	Power supply Volt	Power supply Hz	Continuous duty current
PRESFLO VARIO	1.5	2	230	50/60	13 A

PRESFLO VARIO features 2 LED indicators to show the system's operating status and alerting to any issues through blinking patterns. A guide on the user interface helps to identify specific problems indicated by the LEDs.

INSTALLATION AND USE

PRESFLO VARIO is an electronic device designed to control and protect single-phase domestic pumps with a power capacity of up to 2 HP. It is ideal for water supply and pressure boosting in residential settings, as well as for small-scale irrigation applications.

PRODUCT DESCRIPTION

※ **PRESFLO VARIO** features a pressure sensor and a flow sensor linked to an electronic system that automatically activates the pump when a faucet's opening lowers the pressure below a specified level and deactivates it when the flow stops or dips under **2 l/min**.

※ **Adjustable restart pressure ranging from 0.8 bar to 2.4 bar.**

※ **PRESFLO VARIO** is also equipped with**:**

- Pressure Gauge
- Integrated micro-accumulation enables operation even without an expansion tank, though the use of a **1SF tank is recommended**;

The integrated electronics protect the pump from:

※ dry running

※ frequent start-ups due to leaks in the system.

PERFORMANCE RANGE

※ Maximum volume capacity: **170 l/min** (10 m³/h)

※ Restart pressure: **adjustable** (factory setting **1.5 bar**)

APPLICATION LIMITS

※ Liquid temperature up to **+40 °C**

※ Ambient temperature up to **+40 °C**

※ Maximum operating pressure **10 bar**

※ Protection rating: **IP 65**

PERFORMANCE AND SAFETY STANDARDS

The electronic circuit board inside the **PRESFLO VARIO** has passed the most rigorous **EMC tests** for electromagnetic compatibility.

AVAILABLE UPON REQUEST

※ Version with power cable with Schuko plug and pump connection cable

ADJUSTMENT

PRESFLO VARIO has a knob for quick and intuitive adjustment of the restart pressure from a minimum **of 0.8 bar** to a maximum of **2.4 bar**

DIMENSIONS AND WEIGHT

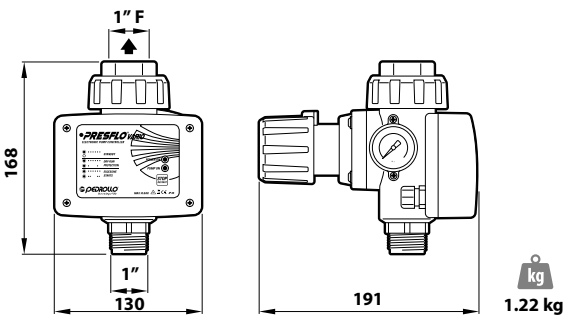

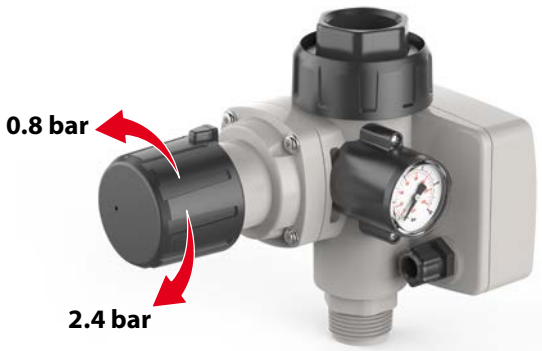

PRESFLO MULTI Automatic control device

Clean water Domestic use

TECHNICAL DATA

TYPE Single-phase	P2 kW	P2 HP	Power supply Volt	Power supply Hz	Continuous duty current
PRESFLO MULTI	1.5	2	230	50/60	13 A

STANDBY	
DRY-RUN PROTECTION	
EXCESSIVE STARTS	
OVERLOAD	

PRESFLO MULTI features 2 LED indicators to show the system's operating status and alerting to any issues through blinking patterns. A guide on the user interface helps to identify specific problems indicated by the LEDs.

INSTALLATION AND USE

PRESFLO MULTI is an electronic device designed to control and protect single-phase domestic pumps with a power capacity of up to 2 HP. It is ideal for water supply and pressure boosting in residential settings, as well as for small-scale irrigation applications.

PRODUCT DESCRIPTION

※ **PRESFLO MULTI** features a pressure sensor and a flow sensor linked to an electronic system that automatically activates the pump when a faucet's opening lowers the pressure below a specified level and deactivates it when the flow stops or dips under **2 l/min**.

※ **PRESFLO MULTI** is also equipped with:
- Pressure Gauge
- integrated **1-litre** expansion tank useful in case of leaks and to protect against water hammer;
- option to adjust the restart pressure from **1 bar** to **5 bar**;
- capability to set the maximum current up to **16 A**

The integrated electronics protect the pump from:
※ dry running
※ frequent start-ups due to leaks in the system;
※ Overcurrent

DIMENSIONS AND WEIGHT

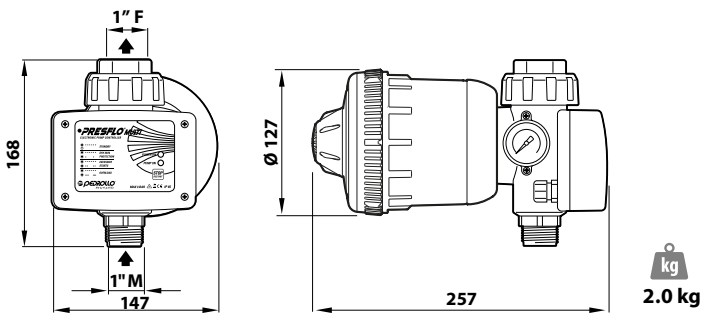

PERFORMANCE RANGE

※ Maximum volume capacity: **170 l/min** (10 m³/h)
※ Adjustable restart pressure (factory setting **2 bar**)
※ maximum current: **adjustable** up to **16 A**.

APPLICATION LIMITS

※ Liquid temperature up to **+40 °C**
※ Ambient temperature up to **+40 °C**
※ Maximum operating pressure **8 bar**
※ Protection rating: **IP 65**

PERFORMANCE AND SAFETY STANDARDS

The electronic circuit board inside the **PRESFLO MULTI** has passed the most rigorous **EMC tests** for electromagnetic compatibility.

AVAILABLE UPON REQUEST

※ Version with power cable with Schuko plug and pump connection cable

ADJUSTMENT

PRESFLO MULTI is equipped with two trimmers and a screwdriver for simple and intuitive adjustment of:
- restart pressure from **1 bar** to **5 bar**
- amperometric protection from **4** to **16 A**

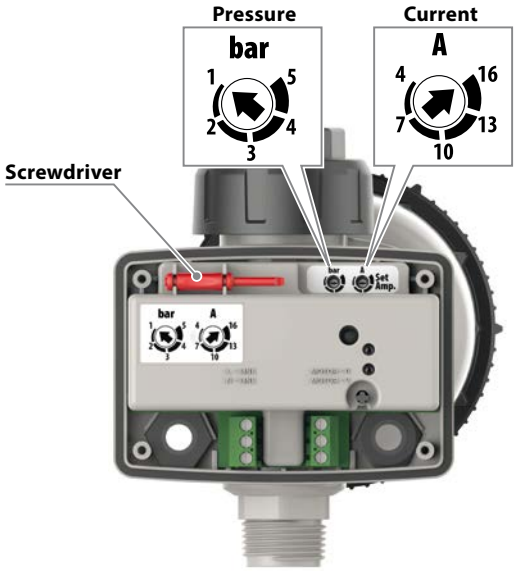

PRESET Electronic pressure switch:

Clean water Domestic use

INSTALLATION AND USE

PRESET is an electronic device ideal for the control and protection of single-phase domestic pumps with power up to 2 HP, in connection with autoclaves for water supply and pressure boosting in domestic applications and for residential irrigation systems.

PRODUCT DESCRIPTION

※ **PRESET** activates the pump when opening a faucet reduces system pressure below the operational threshold and turns it off once pressure surpasses the shut-off limit, serving as a modern alternative to conventional mechanical pressure switches.

※ **PRESET** is equipped with:
- **pressure sensor enabling accurate digital control of start and stop pressures from 0.8 to 9 bar;**
- display for reading the operating parameters;
- integrated and inspectable non-return valve.

The integrated electronics protect the pump from:
※ dry running
※ frequent start-ups due to leaks in the system;
※ Overcurrent

DIMENSIONS AND WEIGHT

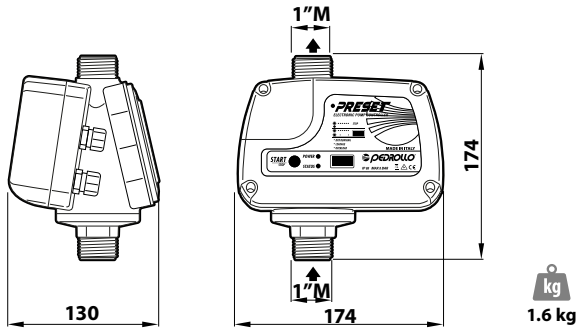

TECHNICAL DATA

TYPE Single-phase	P2 kW	P2 HP	Power supply Volt	Power supply Hz	Continuous duty current
PRESET	1.5	2	230	50/60	13 A

PERFORMANCE RANGE

※ Running pressure: adjustable from **0.8** to **9 bar** (factory setting at **2 bar**)
※ Cut-off pressure: adjustable from **1** to **9.2 bar**(factory setting **3 bar**)
※ Maximum current: adjustable (factory setting **16 A)**

APPLICATION LIMITS

※ Liquid temperature up to **+40 °C**
※ Ambient temperature up to **+40 °C**
※ Maximum working pressure: **10 bar**
※ Protection rating: **IP 65**

PERFORMANCE AND SAFETY STANDARDS

The circuit board inside the **PRESET** has passed the most stringent **EMC tests** for electromagnetic compatibility.

ADJUSTMENT

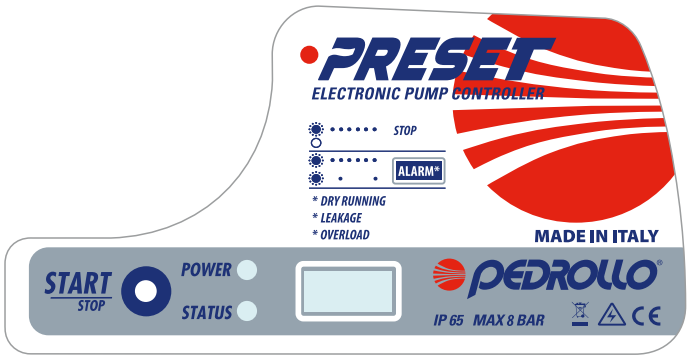

Pressing the START button begins a step-by-step guide to configure PRESET, which involves setting specific parameters:

※ operating pressure (M)
※ shut-off pressure (A)
※ maximum allowed current (C)
※ operating time at no flow (TD)
※ restart time after shutdown (TP)

EP Electronic protection device

Domestic use

PRODUCT DESCRIPTION

EP is an electronic device designed to safeguard the pump by automatically shutting it off in case of:

※ Dry running
※ Overcurrent
※ Overvoltage
※ Undervoltage

TECHNICAL DATA

Single-phase supply voltage	**110/230 V ±10**
Frequency	**50-60 Hz**
Maximum pump current	**16 A**
Maximum pump power	**2 HP**
Operating temperature	From **-5** to **45 °C**
Maximum ambient temperature	**55 °C**
Protection rating	**IP 55**

INSTALLATION

Fig. 1

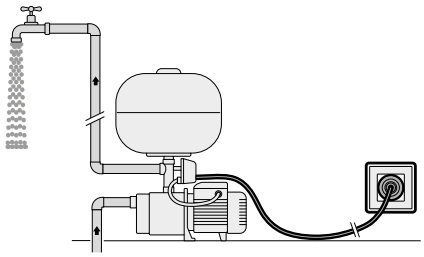

Fig. 2

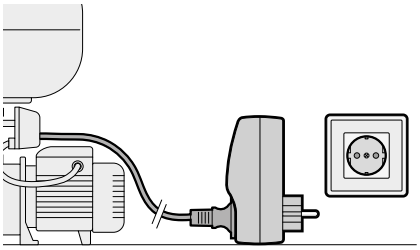

Fig. 3

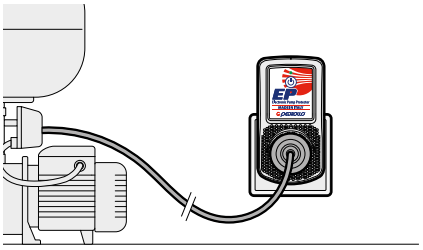

VIDEO TUTORIAL

USER INTERFACE

- Key ⏻ with **START/STOP** function, self-learning and alarm reset.
- Multicoloured LED indicator. It flashes and changes colour depending on the status of the EP device.

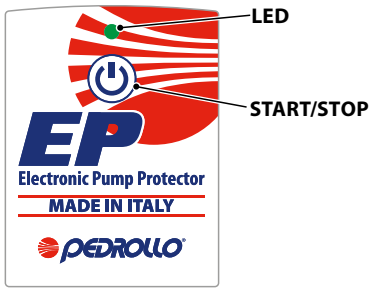

LED light description	Meaning of the LED light
Indicator light OFF:	Device off
Steady GREEN light	Powered Device
Steady BLUE light	Device in regular operation
Flashing RED light	Dry running
Red light fixed	Overcurrent
Steady YELLOW light	Overvoltage/undervoltage
Continuously variable colour indicator	Self-learning phase (WIZARD)

INSTALLATION AND OPERATION

After verifying the water system is functioning correctly, proceed with the following steps:

※ Operate the pump with the delivery point open **(Fig. 1).**

※ Disconnect the plug of the pump's power cable from the power socket, leaving the supply point open, and drain the system completely **(Fig. 2).**

※ Insert the pump's power cable plug into the EP device **(Fig. 2).**

※ Plug the EP device into the outlet (**Fig. 3**) and start the self-learning procedure (see instruction manual).

After completing the self-learning procedure, the system is ready for use.

STEADYPRES Inverter with water passage

Clean water

INSTALLATION AND USE

STEADYPRES is an inverter-based electronic control device compatible with both surface and submersible pumps, SINGLE-PHASE or THREE-PHASE, up to **1.5 HP (1.1 kW)**. Designed for domestic water supply and irrigation, it seamlessly integrates with any pressurization system, including existing setups, to enhance comfort, extend system lifespan, and achieve significant energy savings.

PRODUCT DESCRIPTION

STEADYPRES is connected to the pump's delivery system and adjusts the motor's rotation speed by modulating the output voltage's value and frequency. This adaptation is based on the required water flow, ensuring constant pressure within the system.

STEADYPRES components:
- electronic frequency converter (inverter);
- integrated pressure and flow sensors;
- user interface with keypad and LED indicators for intuitive parameter reading;
- integrated and inspectable non-return valve;
- rear threaded connection to equip the system with a small expansion tank.

STEADYPRES protects the pump from:
※ Dry running
※ Overcurrent
※ Undervoltage
※ Overheating
※ Short circuit or current leakage

VERSATILE PRODUCT

STEADYPRES can be paired with both single-phase and three-phase pumps, featuring internal switches for configuration settings of

※ **the output frequency at 50 Hz or 60 Hz**
※ **the output supply voltage**
(single-phase or three-phase 230V)

N	Position	Selector switch position	Value
1	Operating FREQUENCY	**ON**	60 Hz
		OFF	50 Hz
2	SINGLE-PHASE or THREE-PHASE output	**ON**	MT (three-phase)
		OFF	MM (single-phase)

KEY FEATURES

※ Quick and intuitive pressure adjustment via +/- buttons (**1-9 bar**)
※ Energy-saving with reduced pump absorption
※ Reduced noise operation
※ Minimal pressure drops
※ Extended pump lifespan

OPTIONAL

※ **Expansion board** enables parallel connection of up to two devices, forming pumping groups.

TECHNICAL DATA	M/M USE (Single-phase / Single-phase)	M/T USE (Single-phase / Three-phase)
Power supply voltage	1 ~ 230 V	1 ~ 230 V
Pump motor voltage	1 ~ 230 V	3 ~ 230 V
Permissible voltage variation	± 10%	± 10%
Supply frequency	50/60 Hz	50/60 Hz
Maximum electric pump motor current	8.5 A	7.0 A
Maximum electric pump motor power	1.5 HP	1.5 HP
Setting pressure	1÷9 bar	1÷9 bar
Maximum liquid temperature	+40 °C	+40 °C
Room temperature	0 °C ÷ 40 °C	0 °C ÷ 40 °C
Maximum pressure	10 bar	10 bar
Protection rating	IP 65	IP 65

USER INTERFACE

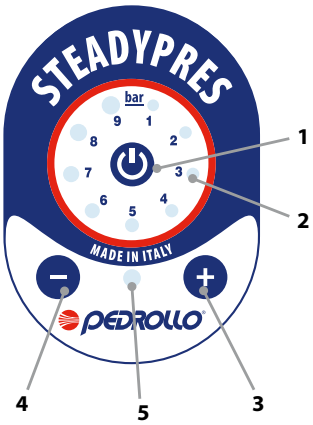

KEY

1) ON/OFF button

2) Operation and alarm LED indicators

3) Increase pressure button

4) Decrease pressure button

5) Operating status LED

DIMENSIONS AND WEIGHT (mm)

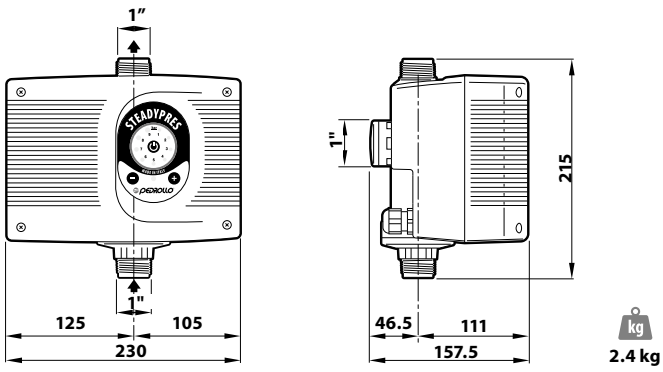

TYPICAL INSTALLATION

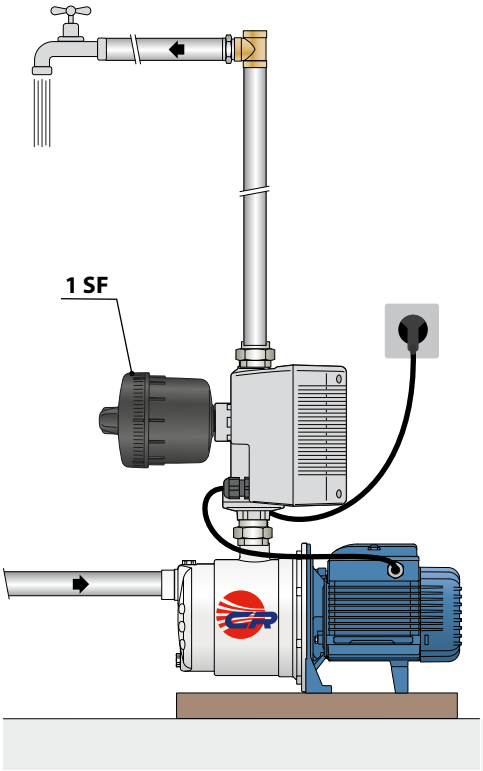

N.B.: It's advisable to install a membrane EXPANSION TANK (**1SF**) downstream of the inverter to:

※ decrease pump start frequency

※ absorbe excess pressure from the system, like water hammer

STEADYPRES Inverter with water passage

Clean water

Domestic use

Civil use

INSTALLATION AND USE

STEADYPRES is an electronic device that manages and controls both surface and submersible pumps using inverter technology.

STEADYPRESIt is designed for water supply in homes, businesses, and for irrigation purposes. Suitable for all kinds of pressurization systems, including existing ones, STEADYPRES enhances comfort, extends the system's lifespan, and significantly reduces energy consumption.

PRODUCT DESCRIPTION

STEADYPRES is connected to the pump's delivery system and regulates the motor's rotation speed by adjusting the voltage and frequency of the output, in response to water flow demand, ensuring constant pressure within the system.

STEADYPRES components:
- electronic frequency converter (inverter);
- pressure and flow sensor;
- user interface with keypad and display to facilitate setting and reading operations;
- integrated and inspectable non-return valve.

STEADYPRES features include:
※ A display and keypad for easy, step-by-step setup of operating parameters with two levels of adjustment:
  - BASIC, for setting pressure and current;
  - ADVANCED, for customizing the inverter for specific system needs .

※ Internal electronic components are cooled as water flows through the device, helping to dissipate heat.

STEADYPRES protects the pump from:
※ Dry running
※ Overcurrents
※ Overvoltage
※ Undervoltage
※ Overheating
※ Short circuit
※ Phase failure in connections (for TT version)

KEY FEATURES

※ Easy installation, adjustment and setting.
※ Energy saving due to lower absorption of the pump.
※ Control of hydraulic and electrical operating parameters and protection against faults.
※ Reduced noise operation.
※ Longer pump life.

OPTIONAL A RICHIESTA

※ **Expansion board**, which allows:
  - RS485 communication to link up to three STEADYPRES inverters and create pumping groups;
  - alternating pump operation;
  - configuration of a dry input contact (e.g. float, double set point);
  - configuration of a dry output contact (e.g. alarm)

TECHNICAL DATA	STEADYPRES MM 11	STEADYPRES MM 16	STEADYPRES MT 10	STEADYPRES TT 6	STEADYPRES TT 8
Power supply voltage	1 ~ 230 V	1 ~ 230 V	1 ~ 230 V	3 ~ 400 V	3 ~ 400 V
Pump motor voltage	1 ~ 230 V	1 ~ 230 V	3 ~ 230 V	3 ~ 400 V	3 ~ 400 V
Permissible voltage variation	± 10%	± 10%	± 10%	± 10%	± 10%
Supply frequency	50/60Hz	50/60Hz	50/60Hz	50/60Hz	50/60Hz
Maximum pump motor current	11 A	16 A	10 A	6 A	8 A
Maximum pump motor power	2 HP (1.5 kW)	3 HP (2.2 kW)	3 HP (2.2 kW)	3 HP (2.2 kW)	4 HP (3 kW)
Setting pressure	1÷10 bar	1÷10 bar	1÷10 bar	1÷10 bar	1÷10 bar
Maximum liquid temperature	+40 °C	+40 °C	+40 °C	+40 °C	+40 °C
Room temperature	0 °C ÷ 40 °C	0 °C ÷ 40 °C	0 °C ÷ 40 °C	0 °C ÷ 40 °C	0 °C ÷ 40 °C
Maximum pressure	10 bar	10 bar	10 bar	10 bar	10 bar
Protection rating	IP 65	IP 65	IP 65	IP 65	IP 65
Weight	3 kg	4 kg	3 kg	4 kg	4 kg

USER INTERFACE

※ **The keypad makes it easy to access and navigate through configuration menus, allowing you to adjust and view various operating parameters such as system pressure, operating frequency, absorbed current, and alarm messages.**

※ **LED light signals indicate the pump's operating status for quick checking.**

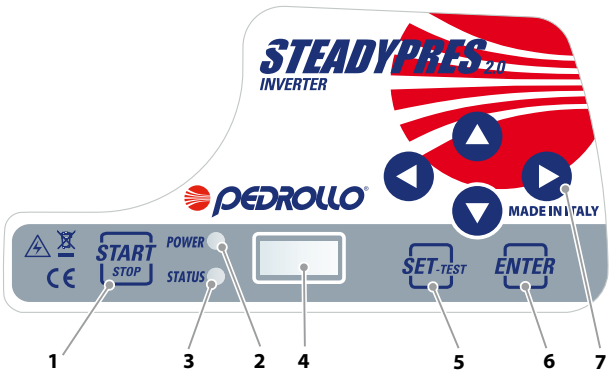

KEY

1) ON/OFF button
2) Red networking LED
3) Green run LED
4) Display
5) SET button
6) ENTER confirmation button
7) Scroll Arrows

DIMENSIONS (mm)

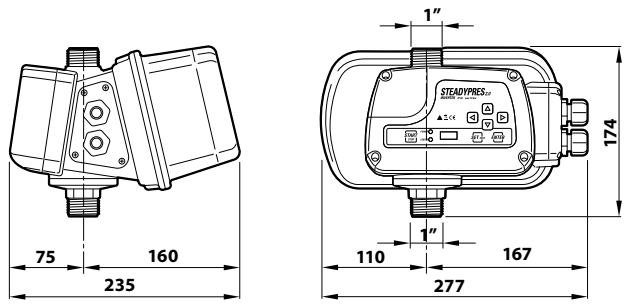

TYPICAL INSTALLATION

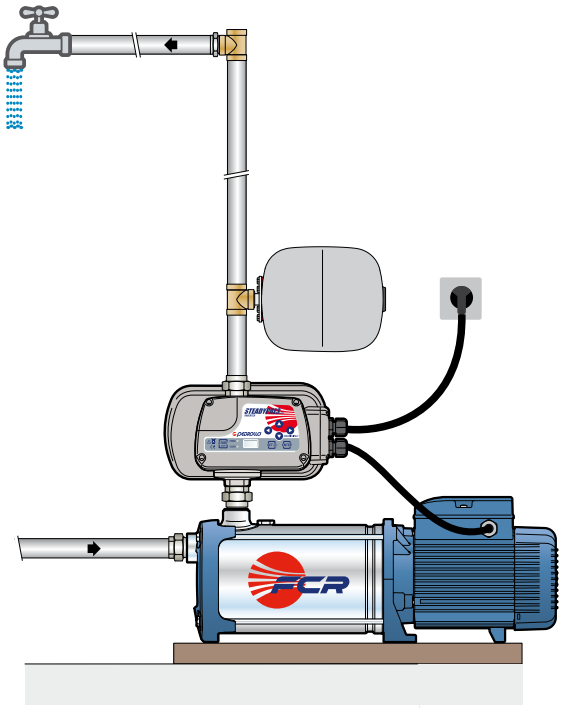

N.B.: it's advisable to install a membrane EXPANSION TANK downstream of the inverter to:

※ decrease pump start frequency
※ absorb excess pressure from the system, like water hammer

DG FIT Wall-mounted inverter

Domestic use

Civil use

INSTALLATION AND USE

DG FIT is an inverter-based electronic control device designed for single-phase surface or submersible pumps.

It is utilized for water supply in residential, commercial, and irrigation applications, and is compatible with all types of pressurization systems, including existing ones.

DG FIT ensures maximum comfort, extends the system's service life, and facilitates significant energy savings.

DG FIT protects the pump from:

※ Dry running
※ Overcurrent
※ Overvoltage
※ Undervoltage
※ Overheating
※ Short circuit

PRODUCT DESCRIPTION

DG FIT is a wall-mounted frequency converter which, equipped with a pressure sensor, allows the rotation speed of the motor to adjust dynamically according to the amount of water required, thus ensuring constant pressure in the system.

DG FIT is characterised by:

※ A display and keypad for easy, step-by-step setup of operating parameters with two levels of adjustment:
- **BASIC**, for setting pressure and current;
- **ADVANCED**, for customizing the inverter for specific system needs.

※ Electronic components are cooled by an integrated fan to ensure heat dissipation.

※ Integrated expansion board, which allows:
- RS 485 communication for up to three **DG FIT** to talk to each other
- configuration of a dry input contact (e.g. float, double set point)
- configuration of a dry output contact (e.g. alarm)

※ Input signal: pressure sensor
※ Arrangement for wall connection

ADVANTAGES IN USE

※ Easy installation, adjustment and setting.
※ Energy saving due to lower absorption of the pump.
※ Control of hydraulic and electrical operating parameters and protection against faults.
※ Reduced noise operation.
※ Longer pump life.
※ Possibility to connect up to three devices to create pressurization units

TECHNICAL DATA	DG FIT MM 8	DG FIT MM 11	DG FIT MM 16
Power supply voltage	1 ~ 230 V	1 ~ 230 V	1 ~ 230 V
Pump motor voltage	1 ~ 230 V	1 ~ 230 V	1 ~ 230 V
Permissible voltage variation	± 10%	± 10%	± 10%
Supply frequency	50/60Hz	50/60Hz	50/60Hz
Maximum pump motor current	8.5 A	11 A	16 A
Maximum pump motor power	1.5 HP (1.1 kW)	2 HP (1.5 kW)	3 HP (2.2 kW)
Room temperature	0 °C ÷ 40 °C	0 °C ÷ 40 °C	0 °C ÷ 40 °C
Protection rating	IP 54	IP 54	IP 54
RS-485 communication	standard	standard	standard
Dry input contact	standard	standard	standard
Dry contact output	standard	standard	standard

USER INTERFACE

The keypad simplifies the process of accessing and navigating configuration menus, enabling the adjustment, and monitoring of various operational parameters, including system pressure, operating frequency, absorbed current, and alarm messages. LED indicators provide quick insights into the pump's operational status at a glance.

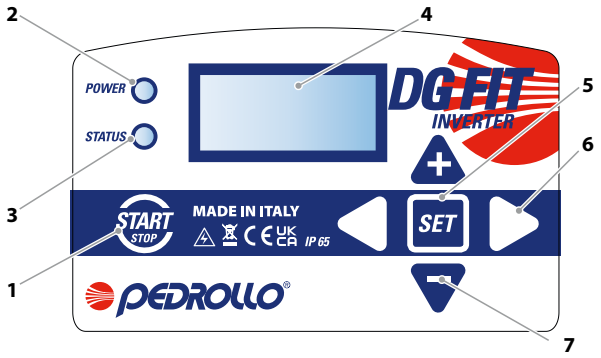

KEY

1) Power on/off key
2) Red networking LED
3) Green run LED
4) Display
5) SET button
6) Menu/parameter input/output arrows
7) Menu/parameter scrolling arrows

DIMENSIONS (mm)

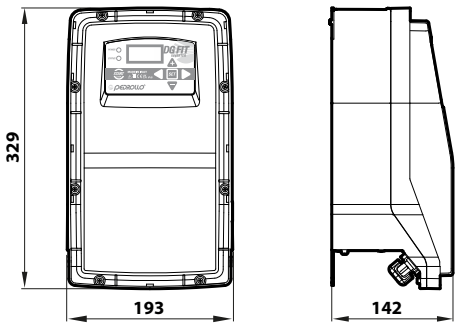

kg
3.5 kg

TYPICAL INSTALLATION

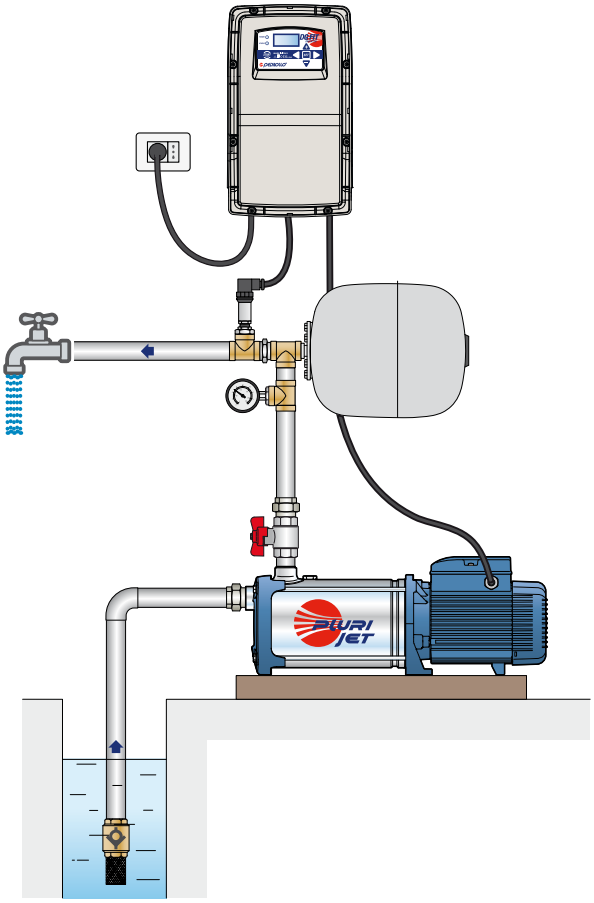

N.B.: it's neceadvisable to install a membrane EXPANSION TANK downstream of the inverter to:

※ decrease pump start frequency
※ absorb excess pressure from the system, like water hammer

PRO-DG Wall-mounted inverter

INSTALLATION AND USE

PRO-DG is an inverter-based electronic control device compatible with both surface and submersible pumps, with motor powers of up to 15 HP. It is specifically engineered for professional applications in water supply, distribution, and transportation across commercial, industrial, and agricultural sectors.
Additionally, **PRO-DG** seamlessly integrates with all types of pressurization systems, including existing setups, ensuring enhanced comfort, prolonged system lifespan, and significant energy savings.

PRO-DG protects the pump from:
※ Dry running
※ Overcurrent
※ Overheating
※ Lack of phases in connections (for TT versions)
※ Motor faults

PRODUCT DESCRIPTION

PRO-DG is a frequency inverter to be installed on the wall using the **WALL MOUNT SUPPORT** installation kit , which includes a ventilation system to induce forced cooling of the electronic components.
Connected to an appropriate pressure sensor, **PRO-DG** adjusts the motor rotation speed to be varied according to water demand and maintains a constant pressure in the system for greater comfort and energy savings.

PRO-DG features include:
- RS485 communication facilitates the connection of up to 8 devices and the creation of pumping groups comprising multiple pumps of the same type.
- a display and keypad enable straightforward and intuitive configuration of basic operating parameters through a start-up wizard consisting of a few simple steps.

KEY FEATURES

※ Easy programming and adjustment
※ Constant pressure in the system
※ Energy Conservation
※ Reduced noise operation
※ Compatible with all pumps on the market
※ Communication of up to eight devices
※ Intelligent intervention management in case of anomalies

OPTIONAL A RICHIESTA

※ An expansion board can be connected to the MT2-11 and TT3-11 models (standard in the TT3-30 model), providing the following capabilities:
- connect to monitoring systems with ModBus connection;
- take a differential pressure reading by connecting a second pressure transducer.

TECHNICAL DATA	PRO-DG MT2-11A	PRO-DG TT3-11A	PRO-DG TT3-30A
Power supply voltage	1 ~ 230 V	3 ~ 400 V	3 ~ 400 V
Pump motor voltage	3 ~ 230 V	3 ~ 400 V	3 ~ 400 V
Permissible voltage variation	± 10%	± 10%	± 10%
Supply frequency	50/60Hz	50/60Hz	50/60Hz
Maximum inverter input current	20 A	12 A	31 A
Maximum electric pump motor current	11 A	11 A	30 A
Maximum electric pump motor power	3 HP	5.5 HP	15 HP
Room temperature	-10 °C ÷ 40 °C	-10 °C ÷ 40 °C	-10 °C ÷ 40 °C
Protection rating	IP 55*	IP 55*	IP 55*
No. of 4-20 mA inputs	1	1	2
No. of configurable digital inputs	2	2	4
RS485 Communication	standard	standard	standard
Motor temperature probe input	optional	optional	standard
0-10 V input	optional	optional	standard
Modbus communication	optional	optional	standard

* IP 54 degree of protection when using the "WALL MOUNT SUPPORT" accessory for wall installation

USER INTERFACE

The keypad simplifies the process of accessing and navigating configuration menus, enabling the adjustment, and monitoring of various operational parameters, including system pressure, operating frequency, absorbed current, and alarm messages. LED indicators provide quick insights into the pump's operational status at a glance

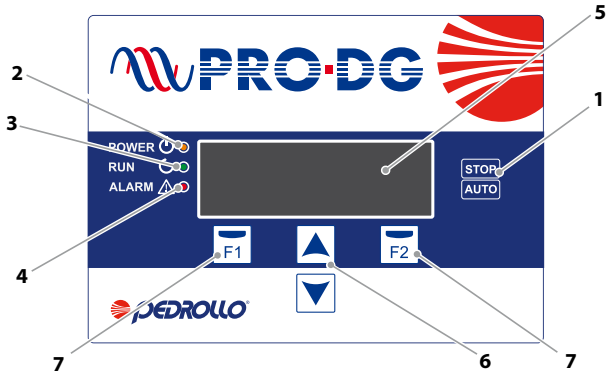

KEY

1) Manual switch-off button
2) Networking LED
3) Running LEDs
4) Alarm LED
5) Display
6) Scroll Arrows
7) FUNCTION KEYS.

DIMENSIONS (mm)

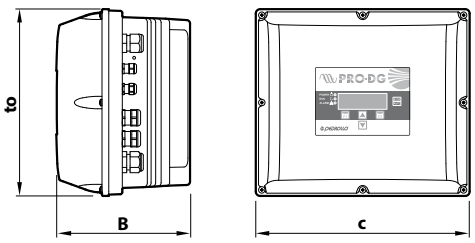

TYPE	DIMENSIONS mm			kg
	a	b	c	
PRO-DG MT 2-11A	183	149	230	2.8
PRO-DG TT 3-11A	183	149	230	2.8
PRO-DG TT 3-30A	276	198	316	6.4

TYPICAL INSTALLATION

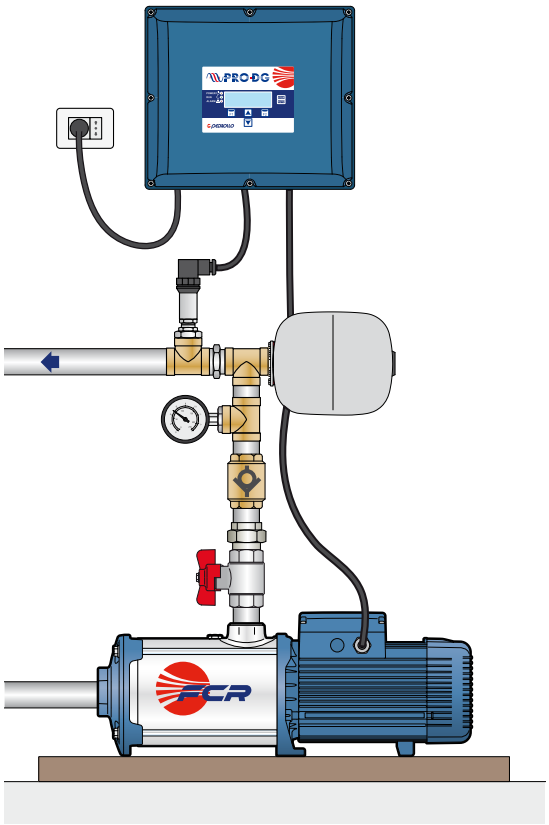

PRO-DG is designed for wall-mounting exclusively when fitted with the WALL MOUNT SUPPORT, available for separate purchase

COMBIPRESS "CB2" Fixed speed pressure units

Domestic use

Civil use

Industrial use

Agricultural use

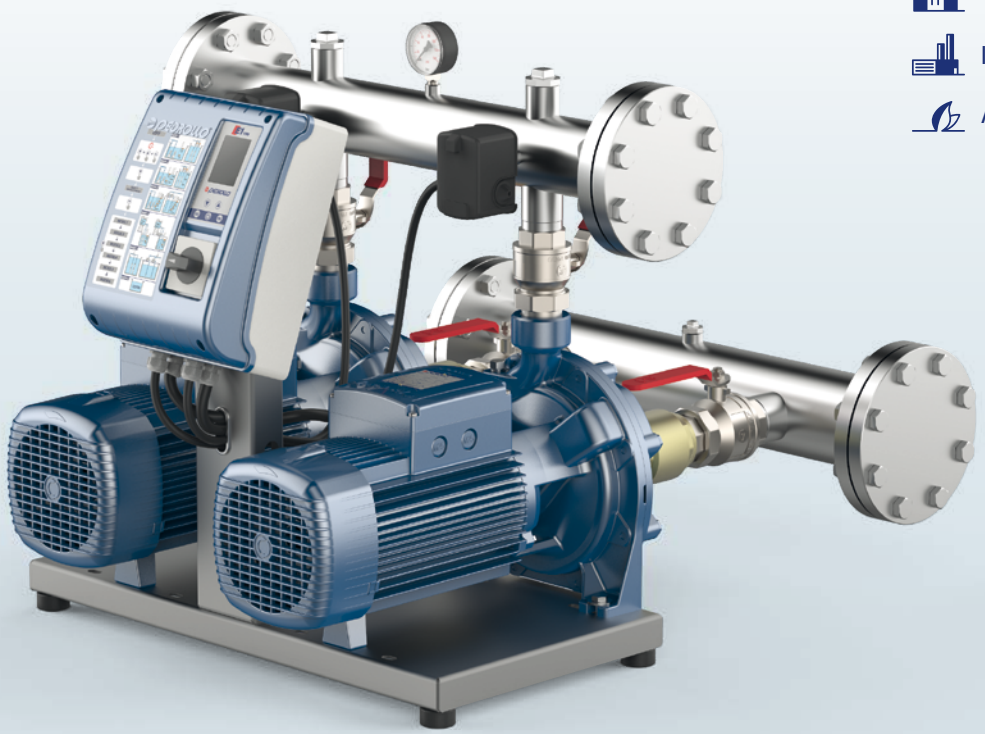

INSTALLATION AND USE

CB2 is a pre-assembled pumping system comprising two pumps, designed for water supply and pressurization in residential, commercial, public buildings, hotels, hospitals, as well as for garden and agricultural irrigation.

CB2 is suitable for pumping clean water or aqueous solutions that do not chemically or mechanically damage the materials used and do not contain abrasive or fibrous substances.

PRODUCT DESCRIPTION

CB2 is a pressurization system featuring two pumps assembled in a unit, ready for connection to the water mains or a primary collection tank.

Controlled by mechanical pressure switches, **CB2** ensures automatic activation of one or both pumps in response to increased user demand, optimizing water supply and minimizing electricity consumption. The system's electronic circuitry facilitates automatic pump switching during start/stop cycles and provides protection against potential faults.

COMPONENTS

※ **Pumps** connected in parallel via suction and discharge manifolds. Each unit is equipped with ball valves on the discharge and suction side, non-return valves on the suction side (with 2CP, 3-5CR, FCR, MK pumps) or on the discharge side (with HT pumps).

※ **BASE** made of metal profile and fitted with adjustable vibration-damping feet.

※ **PRESSURE SWITCHES** mounted on the delivery manifold and connected to the control panel for switching the pumps on and off according to regulation.

※ **ELECTRONIC CONTROL PANEL** (model **E2**) provides protection against dry running by monitoring electrical parameters and allows advanced users to adjust settings to tailor the operation of the pressure unit to specific system requirements.

※ Power supply:
- **CB2m**: single-phase 230 V - 50 Hz
- **CB2**: three-phase 400 V - 50 Hz

CB2 – 2CP

Pressurization units comprising two twin impeller centrifugal pumps, designed to enhance water pressure. Ideal for both residential and commercial water supply applications, they are well-suited for large-scale garden and agricultural irrigation. They also excel at handling clean water in various industrial settings.

TECHNICAL DATA

- Liquid temperature between **+5 °C** and **+55 °C**
- Ambient temperature between **+5 °C** and **+40 °C**
- Max. pressure in the pump body **10 bar** (6 bar for 2CP25/130)
- Continuous running duty **S1**

CB2 – 3-5CR

Pressurization units comprising two multistage centrifugal pumps. They are well-suited for domestic water supply, garden irrigation, and general clean water handling.

TECHNICAL DATA

- Liquid temperature between **+5 °C** and **+55 °C**
- Ambient temperature between **+5 °C** and **+40 °C**
- Max. pressure in the pump body **7 bar**
- Continuous running duty **S1**

CB2 – FCR

Pressurization units comprising two horizontal multistage centrifugal pumps.

Especially well-suited for residential and commercial water supply, industrial pressure boosting, and garden and field irrigation.

TECHNICAL DATA

- Liquid temperature between **+5 °C** and **+55 °C**
- Ambient temperature between **+5 °C** and **+40 °C**
- Max. pressure in pump body **11 bar** (for FCR 80-100 7 bar)
- Continuous running duty **S1**

CB2 – MK

Pressurization units comprising two vertical multistage centrifugal pumps.

They are suitable for residential and commercial water supply, garden irrigation and general clean water handling.

TECHNICAL DATA

- Liquid temperature between **+5 °C** and **+55 °C**
- Ambient temperature between **+5 °C** and **+40 °C**
- Max. pressure in pump body **11 bar**
- Continuous running duty **S1**

CB2 – HT

Pressurization units comprising two vertical multistage centrifugal pumps.

They are well-suited for residential and commercial water supply, irrigation, and general clean water handling, including industrial applications

TECHNICAL DATA

- Liquid temperature between **+5 °C** and **+55 °C**
- Ambient temperature between **+5 °C** and **+40 °C**
- Max. pressure in the pump body **16 bar**
- Continuous running duty **S1**

CB2 – 2CP

FIELD AND PERFORMANCE DATA

50 Hz

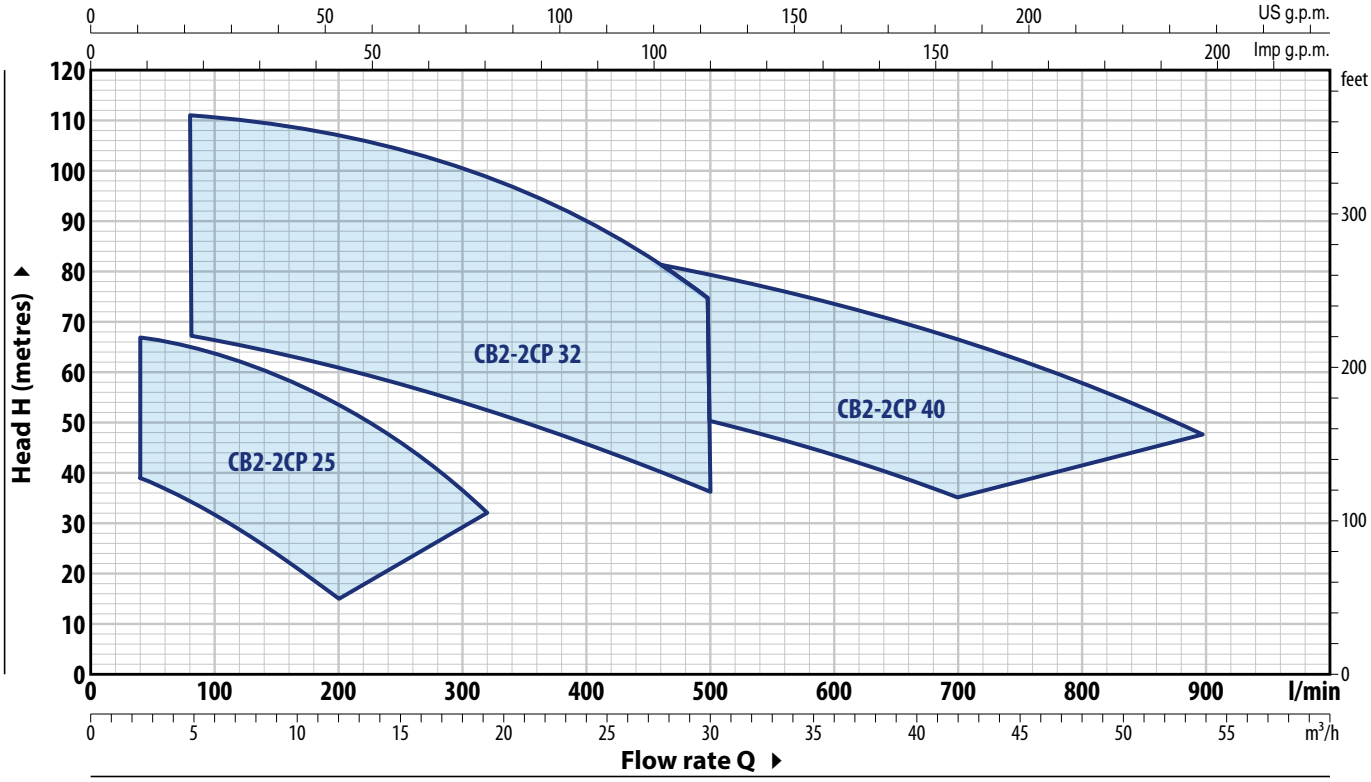

TYPE		POWER P2		Q m³/h	0	2.4	4.8	7.2	9.6	10.8	12.0	13.2	14.4	16.8	19.2
Single-phase	**Three-phase**	**kW**	**HP**	Q l/min	**0**	**40**	**80**	**120**	**160**	**180**	**200**	**220**	**240**	**280**	**320**
CB2 - 2CPm 25/130	–	2x0.75	2x1		42	39	34.5	28.5	22	18	15				
CB2 - 2CPm 25/14B	**CB2 - 2CP 25/14B**	2x1.1	2x1.5		54	52	47.5	41	32.5	27.5	22				
CB2 - 2CPm 25/16C	**CB2 - 2CP 25/16C**	2x1.1	2x1.5	**H** metres	47	46	44	40.5	36	33.5	30.5	27.5	24		
CB2 - 2CPm 25/16B	**CB2 - 2CP 25/16B**	2x1.5	2x2		58	56	54	51	47.5	45.5	43	40	37	30	
–	**CB2 - 2CP 25/16A**	2x2.2	2x3		68	67	65	62	58.5	56	54	51	48	40.5	32

TYPE		POWER P2		Q m³/h	0	4.8	7.2	9.6	12.0	14.4	16.8	19.2	21.6	24.0	30.0
Single-phase	**Three-phase**	**kW**	**HP**	Q l/min	**0**	**80**	**120**	**160**	**200**	**240**	**280**	**320**	**360**	**400**	**500**
–	**CB2 - 2CP 32/200C**	2x3	2x4		70	67	65	63	60.5	58	55	52	48.5	45.5	36
–	**CB2 - 2CP 32/200B**	2x4	2x5.5		85	81	79	77	74.5	71.5	69	66	62.5	59	49
–	**CB2 - 2CP 32/210B**	2x5.5	2x7.5	**H** metres	94	94	93	91	89	86	83	79	75	70	56
–	**CB2 - 2CP 32/210A**	2x7.5	2x10		112	111	110	109	107	105	102	99	95	90	74

TYPE		POWER P2		Q m³/h	0	12	18	24	30	36	42	48	54
Single-phase	**Three-phase**	**kW**	**HP**	Q l/min	**0**	**200**	**300**	**400**	**500**	**600**	**700**	**800**	**900**
–	**CB2 - 2CP 40/180C**	2x4	2x5.5		65	63	60	55.5	50	43	35		
–	**CB2 - 2CP 40/180B**	2x5.5	2x7.5	**H** metres	80	78	75	71	65.5	59	51	42	
–	**CB2 - 2CP 40/180A**	2x7.5	2x10		92	90	87.5	84	79	73.5	66	58	48

Q = Flow rate **H** = Total manometric head

Performance curves comply with EN ISO 9906 Grade 3B tolerance limits.

※ **The data shown in the diagram and tables indicate performance with 2 pumps in operation**

PERFORMANCE CURVES

50 Hz

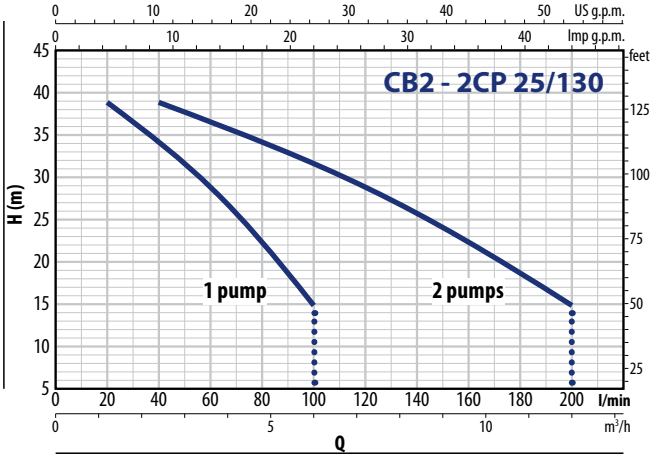

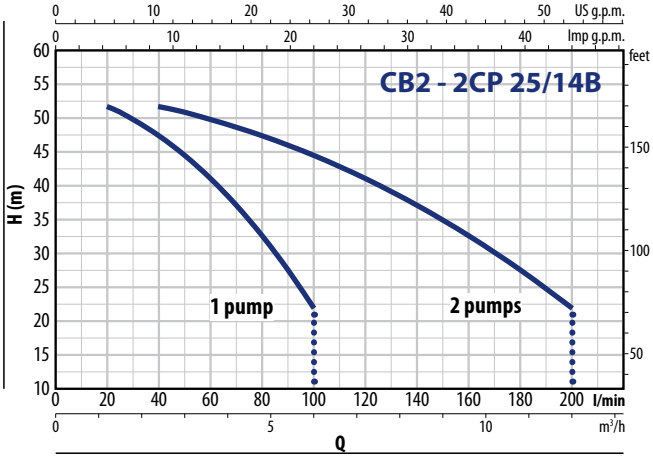

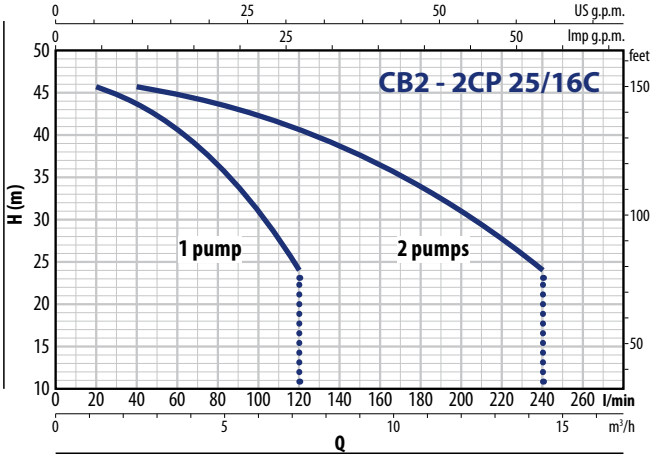

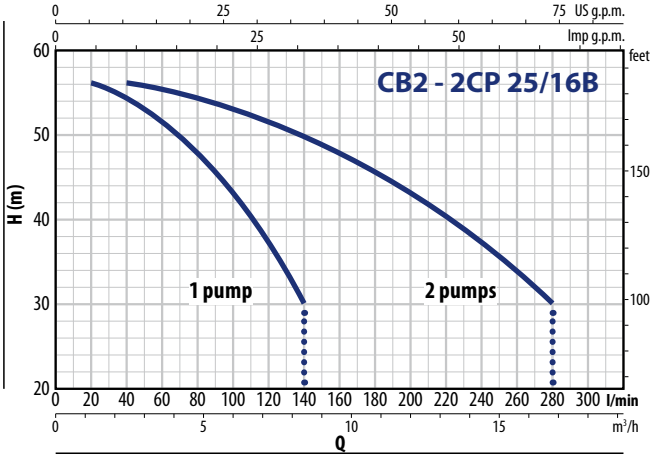

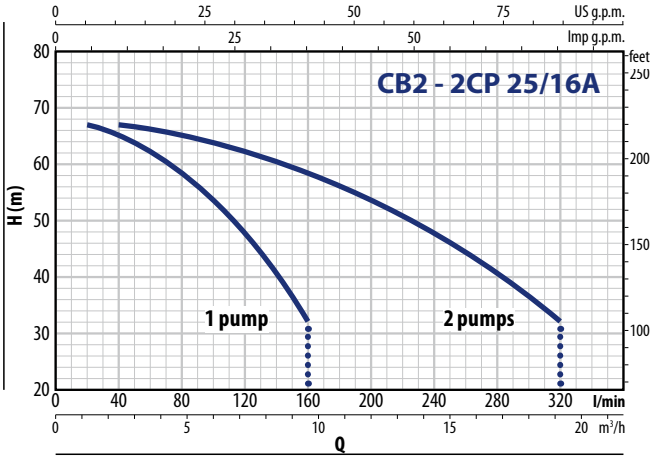

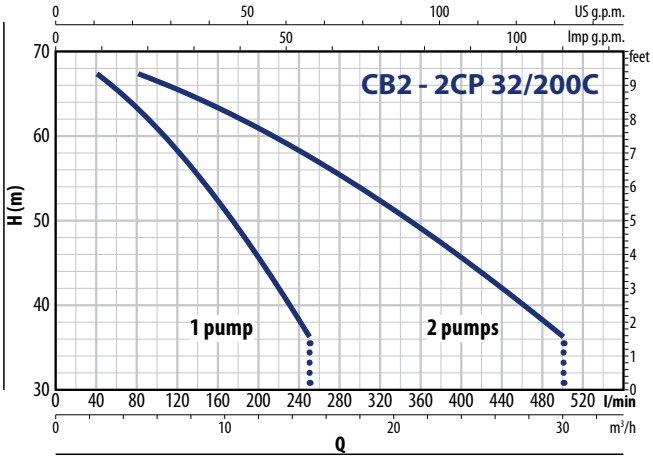

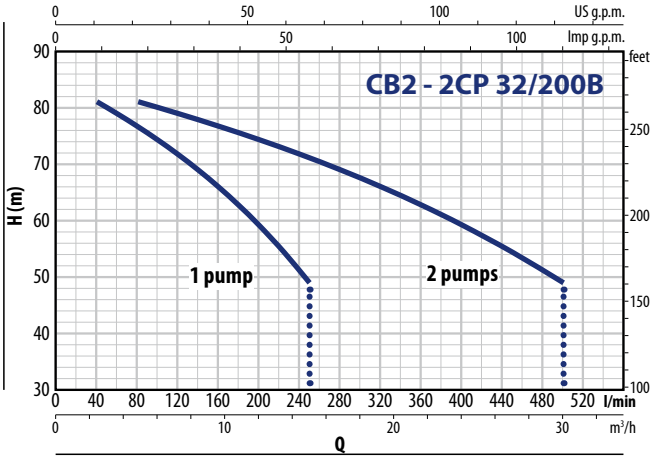

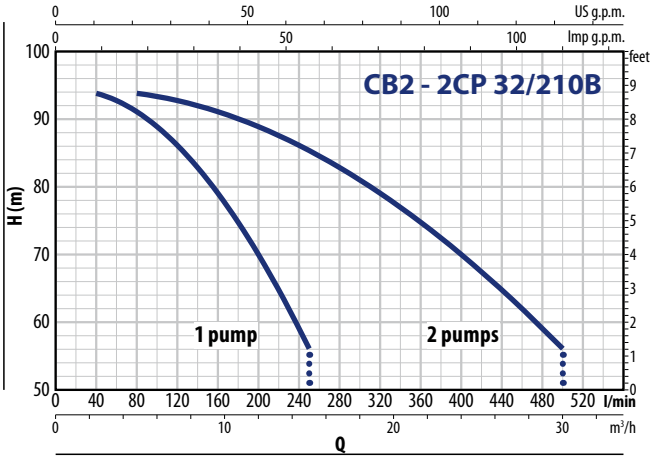

CB2 – 2CP

PERFORMANCE CURVES

50 Hz

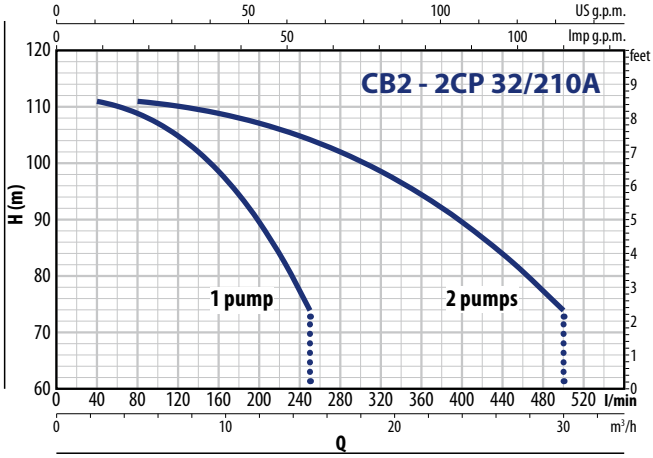

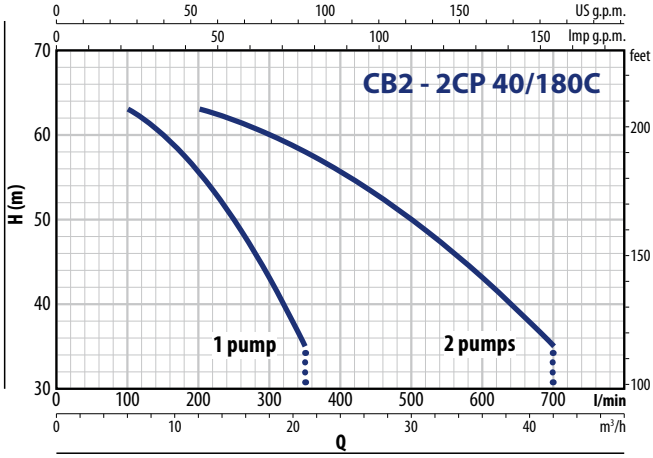

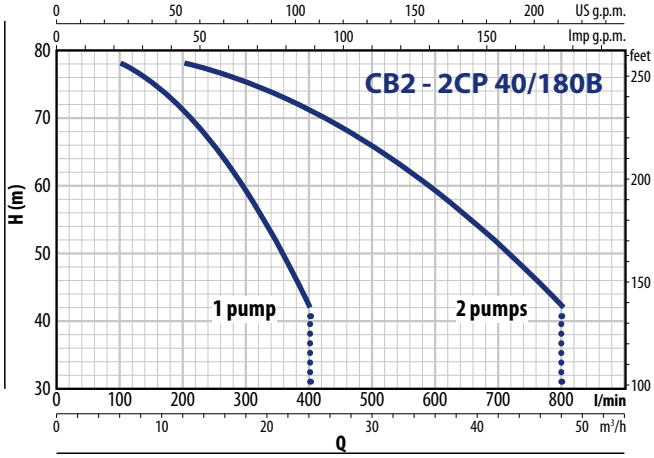

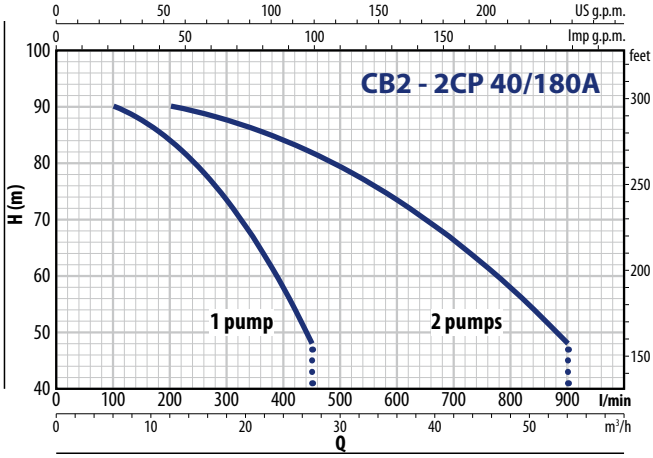

ABSORPTION

TYPE **Single-phase**	VOLTAGE **230 V**
CB2 - 2CPm 25/130	2 x 6.3 A
CB2 - 2CPm 25/14B	2 x 7.7 A
CB2 - 2CPm 25/16C	2 x 7.7 A
CB2 - 2CPm 25/16B	2 x 10.0 A

TYPE **Three-phase**	VOLTAGE **400 V**
CB2 - 2CP 25/14B	2 x 3.1 A
CB2 - 2CP 25/16C	2 x 3.1 A
CB2 - 2CP 25/16B	2 x 4.0 A
CB2 - 2CP 25/16A	2 x 5.3 A
CB2 - 2CP 32/200C	2 x 7.4 A
CB2 - 2CP 32/200B	2 x 10.5 A
CB2 - 2CP 32/210B	2 x 12.5 A
CB2 - 2CP 32/210A	2 x 16.0 A
CB2 - 2CP 40/180C	2 x 9.8 A
CB2 - 2CP 40/180B	2 x 12.3 A
CB2 - 2CP 40/180A	2 x 15.4 A

DIMENSIONS AND WEIGHT

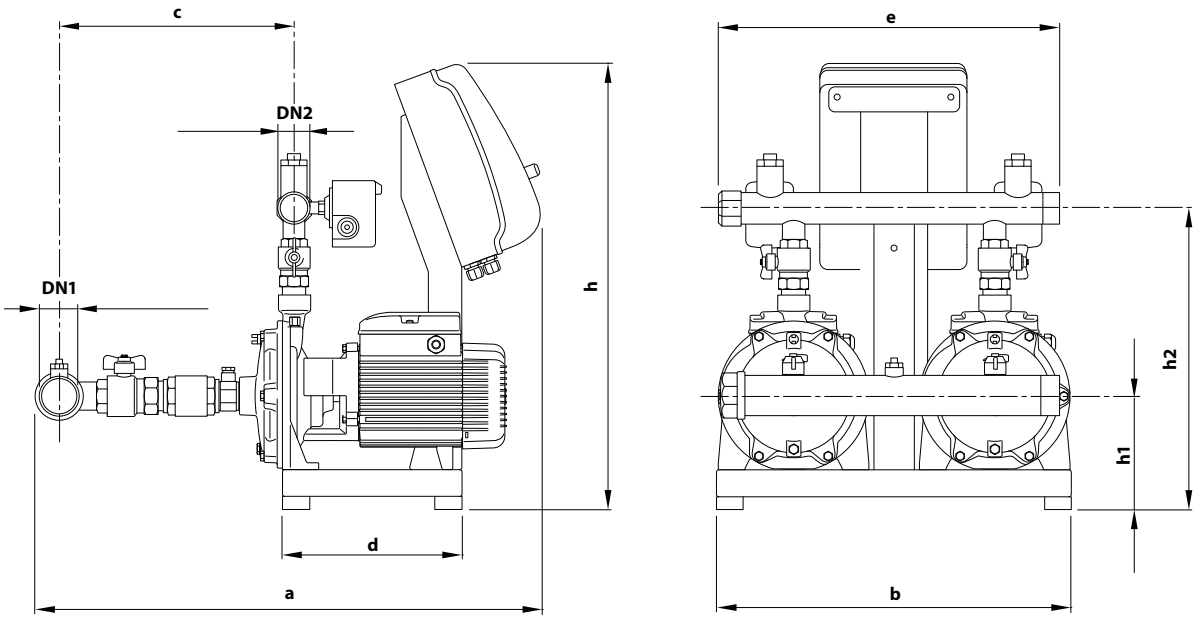

TYPE		PORTS		DIMENSIONS mm								kg	
Single-phase	**Three-phase**	DN1	DN2	a	b	c	d	e	h	h1	h2	1~	3~
CB2 - 2CPm 25/130	**–**	**2"**	**1½"**	727	530	337	270	510	674	152	390	60.0	–
CB2 - 2CPm 25/14B	**CB2 - 2CP 25/14B**			752		346				153	413	72.0	73.0
CB2 - 2CPm 25/16C	**CB2 - 2CP 25/16C**											73.0	73.0
CB2 - 2CPm 25/16B	**CB2 - 2CP 25/16B**			761						170	451	80.0	80.0
–	**CB2 - 2CP 25/16A**											–	86.0
–	**CB2 - 2CP 32/200C**	**3"**	**2"**	972	700	453	370	712		192	516	–	129.0
–	**CB2 - 2CP 32/200B**											–	135.0
–	**CB2 - 2CP 32/210B**			977		456				199	546	–	161.0
–	**CB2 - 2CP 32/210A**											–	171.0
–	**CB2 - 2CP 40/180C**	**DN 100 4"**	**DN 80 3"**	1048		468		774	716		590	–	190.0
–	**CB2 - 2CP 40/180B**											–	199.0
–	**CB2 - 2CP 40/180A**											–	211.0

CB2 – 4-5CR

FIELD AND PERFORMANCE DATA

50 Hz

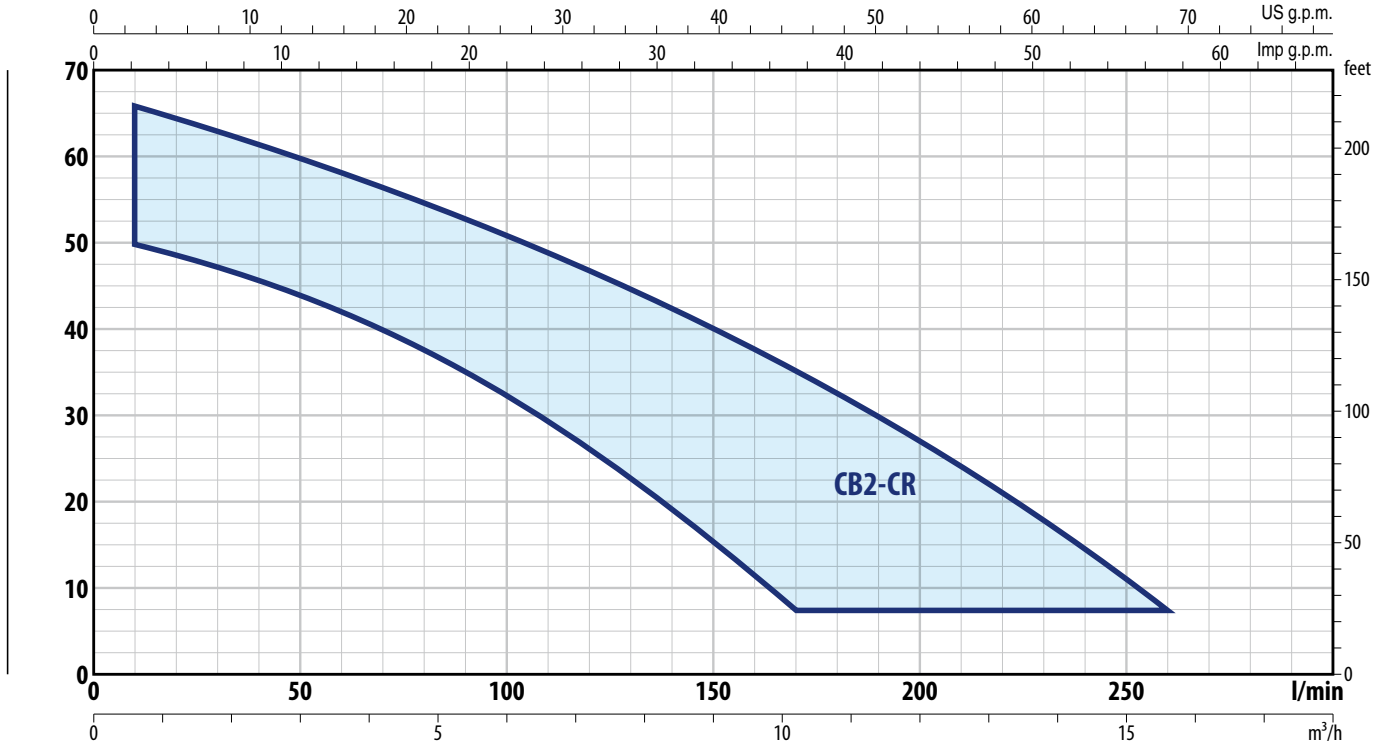

TYPE		POWER (P2)		Q	m³/h	0	0.6	1.2	2.4	3.6	4.8	6	7.2	8.4	9.6	10.8	12	13.2	14.4	15.6
Single-phase	**Three-phase**	**kW**	**HP**		l/min	**0**	**10**	**20**	**40**	**60**	**80**	**100**	**120**	**140**	**160**	**180**	**200**	**220**	**240**	**260**
CB2 - 5CRm 80	**CB2 - 5CR 80**	2x0.75	2x1			67	66	64	59	53	45.5	37.5	29.5	20.5	12					
CB2 - 4CRm 100	**CB2 - 4CR 100**	2x0.75	2x1	**H** metres		50	50	49	47	45	42	39.5	37	34	30.5	26.5	22	17	11	5
CB2 - 5CRm 100	**CB2 - 5CR 100**	2x0.90	2x1.25			63	62	61.5	59.5	57	53.5	50.5	46.5	42.5	38	33	28	22	15	8

Q = Flow rate **H** = Total manometric head

Performance curves comply with EN ISO 9906 Grade 3B tolerance limits.

※ **The data shown in the diagram and tables indicate performance with 2 pumps in operation**

ABSORPTION

TYPE **Single-phase**	VOLTAGE **230 V**
CB2 - 5CRm 80	2 x 5.5 A
CB2 - 4CRm 100	2 x 5.8 A
CB2 - 5CRm 100	2 x 6.8 A

TYPE **Three-phase**	VOLTAGE **400 V**
CB2 - 5CR 80	2 x 2.5 A
CB2 - 4CR 100	2 x 2.3 A
CB2 - 5CR 100	2 x 2.5 A

PERFORMANCE CURVES

50 Hz

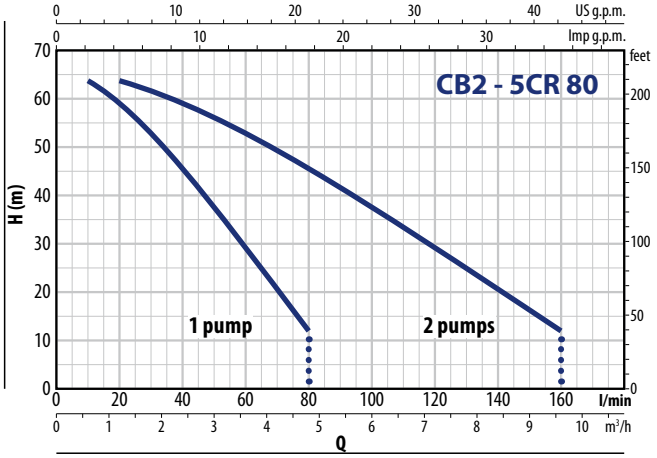

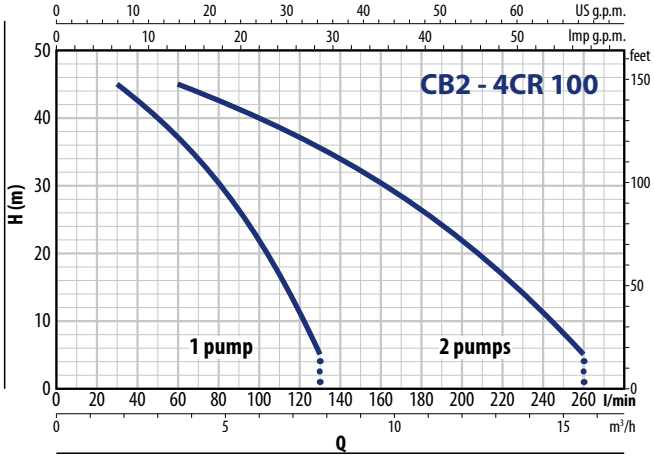

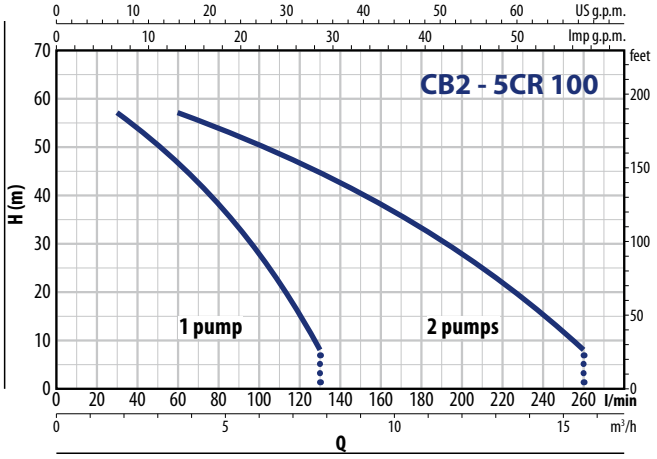

DIMENSIONS AND WEIGHT

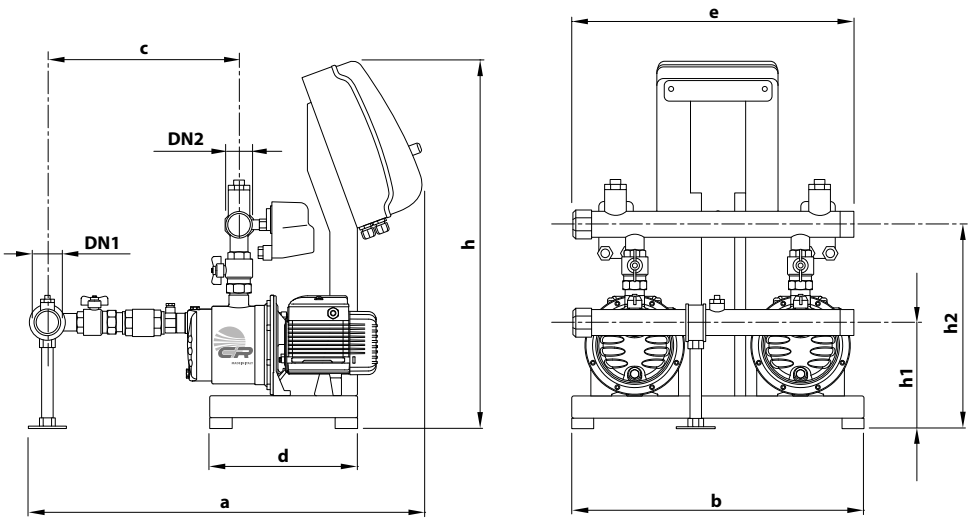

TYPE		PORTS		DIMENSIONS mm								kg	
Single-phase	**Three-phase**	DN1	DN2	a	b	c	d	e	h	h1	h2	1~	3~
CB2 - 5CRm 80	**CB2 - 5CR 80**	**1½"**	**1½"**	760	530	370	270	510	674	192	373	53	54
CB2 - 4CRm 100	**CB2 - 4CR 100**	**2"**	**1½"**	803	530	408	270	510	674	192	373	54	55
CB2 - 5CRm 100	**CB2 - 5CR 100**											56	55

CB2 – FCR

FIELD AND PERFORMANCE DATA

50 Hz

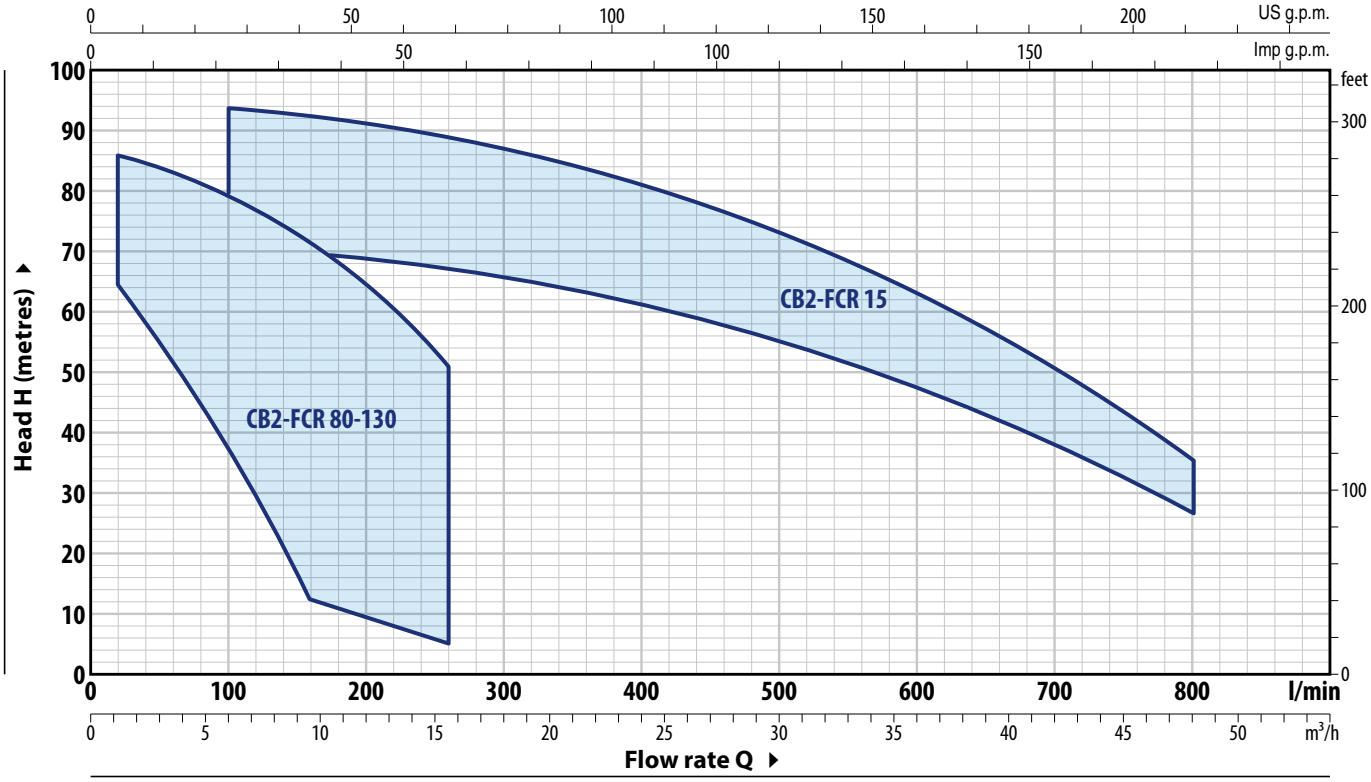

TYPE		POWER P2		Q m³/h	0	0.6	1.2	2.4	4.8	7.2	9.6	10.8	12	13.2	14.4	15.6
Single-phase	**Three-phase**	**kW**	**HP**	l/min	**0**	**10**	**20**	**40**	**80**	**120**	**160**	**180**	**200**	**220**	**240**	**260**
CB2 - FCRm 80/5	**–**	2x0.75	2x1	**H** metres	67	66	64	59	45.5	29.5	12					
CB2 - FCRm 100/4	**–**	2x0.75	2x1		50	50	49	47	42	37	30.5	26.5	22	17	11	5
CB2 - FCRm 100/5	**CB2 - FCR 100/5**	2x1.1	2x1.5		63	62	61.5	59.5	53.5	46.5	38	33	28	22	15	8
CB2 - FCRm 90/5	**CB2 - FCR 90/5**	2x1.1	2x1.5		81	80	79	77	71	62.5	51	44				
CB2 - FCRm 130/4	**CB2 - FCR 130/4**	2x1.5	2x2		68.5	68.5	68	67	65	62	57.5	55	52	48	45	41
–	**CB2 - FCR 130/5**	2x1.8	2x2.5		86	85	85	84	81	77	72	68.5	65	73	67	51.5

TYPE		POWER P2		Q m³/h	0	6	12	24	36	42	48
Single-phase	**Three-phase**	**kW**	**HP**	l/min	**0**	**100**	**200**	**400**	**600**	**700**	**800**
–	**CB2 - FCR 15/3**	2x4	2x5.5	**H** metres	72	70	68.5	61	48	38.5	27
–	**CB2 - FCR 15/4**	2x5.5	2x7.5		96	94	91	81	64	51.5	36

Q = Flow rate **H** = Total manometric head

Performance curves comply with EN ISO 9906 Grade 3B tolerance limits.

※ **The data shown in the diagram and tables indicate performance with 2 pumps in operation**

PERFORMANCE CURVES

50 Hz

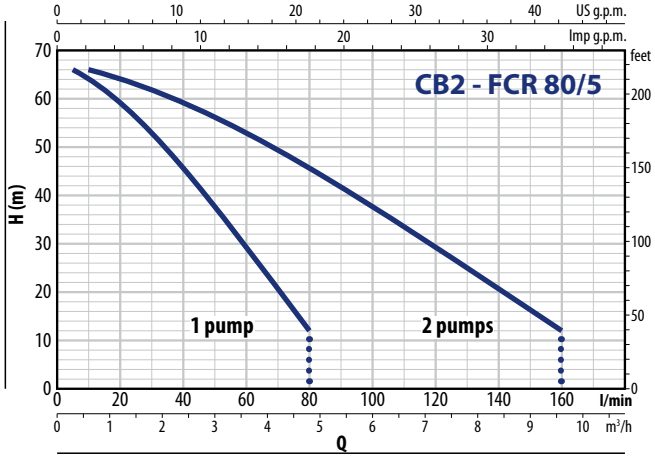

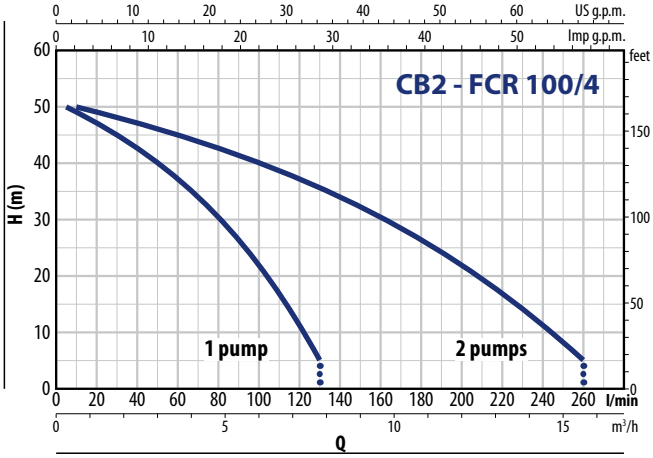

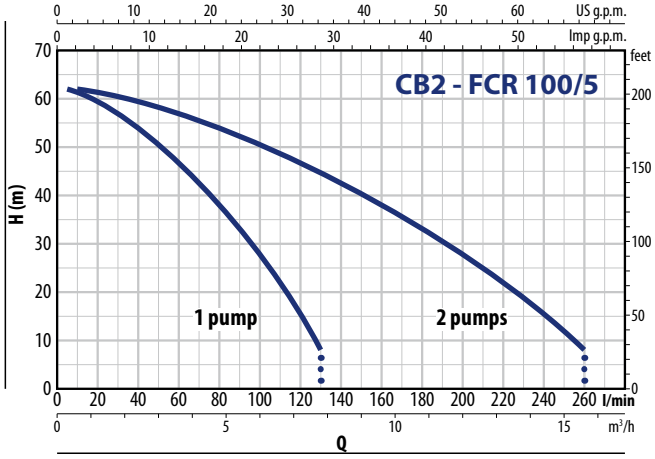

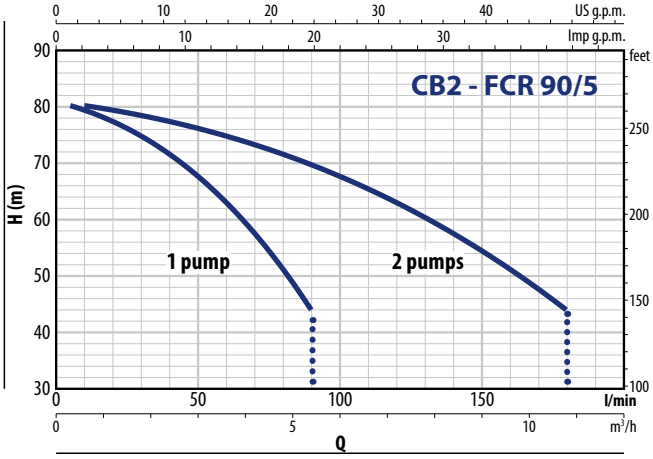

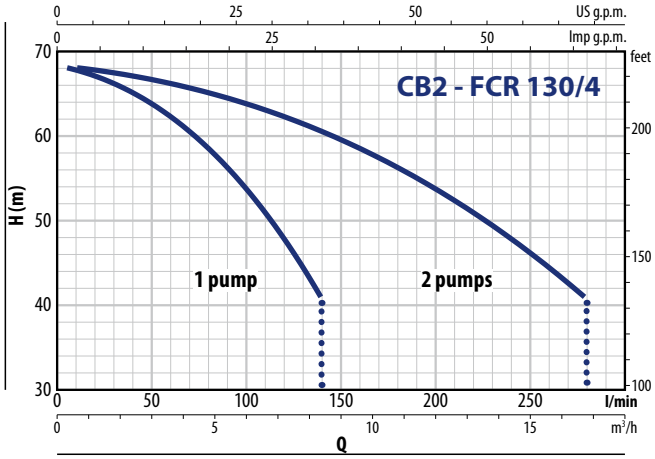

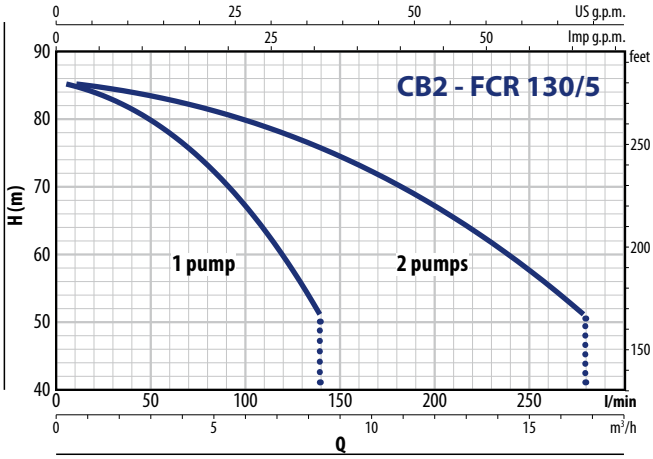

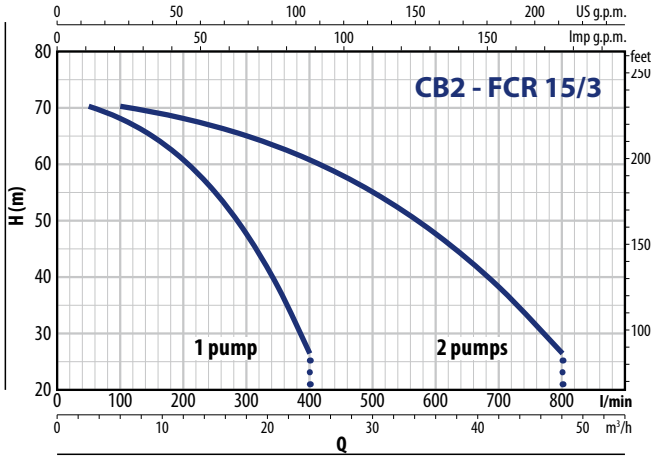

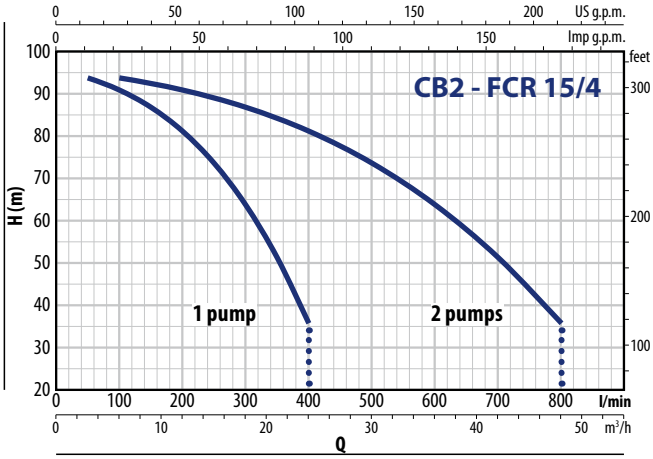

CB2 – FCR

ABSORPTION

TYPE **Single-phase**	VOLTAGE **230 V**
CB2 - FCRm 80/5	2 x 5.5 A
CB2 - FCRm 100/4	2 x 5.8 A
CB2 - FCRm 100/5	2 x 6.8 A
CB2 - FCRm 90/5	2 x 9.0 A
CB2 - FCRm 130/4	2 x 10.3 A

TYPE **Three-phase**	VOLTAGE **400 V**
CB2 - FCR 100/5	2 x 2.5 A
CB2 - FCR 90/5	2 x 3.5 A
CB2 - FCR 130/4	2 x 4.0 A
CB2 - FCR 130/5	2 x 5.0 A
CB2 - FCR 15/3	2 x 8.8 A
CB2 - FCR 15/4	2 x 11.2 A

DIMENSIONS AND WEIGHT

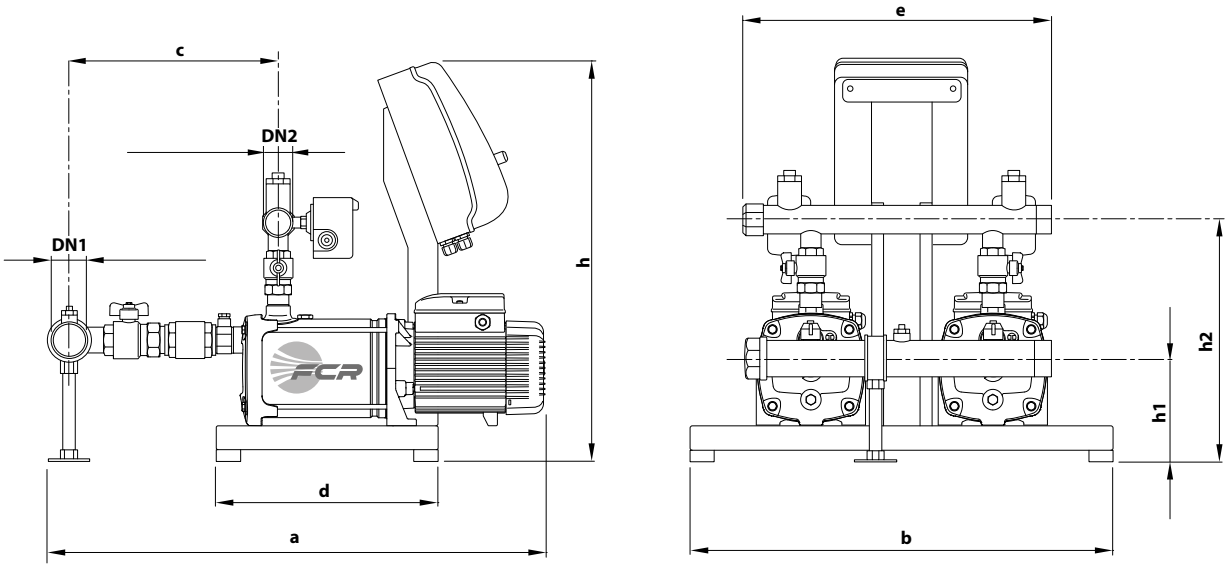

TYPE		PORTS		DIMENSIONS mm								kg	
Single-phase	**Three-phase**	DN1	DN2	a	b	c	d	e	h	h1	h2	1~	3~
CB2 - FCRm 80/5	**–**	**1½"**	**1½"**	672	530	364	270	510	674	182	368	53	–
CB2 - FCRm 100/4	**–**	**2"**	**1½"**	715		401						56	–
CB2 - FCRm 100/5	**CB2 - FCR 100/5**											56	56
CB2 - FCRm 90/5	**CB2 - FCR 90/5**			805	700	339	370			205	394	82	83
CB2 - FCRm 130/4	**CB2 - FCR 130/4**			779								82	83
–	**CB2 - FCR 130/5**			805								–	90
–	**CB2 - FCR 15/3**	**DN 100 4"**	**DN 80 3"**	1058	700	569	490	774	704	211	565	–	179
–	**CB2 - FCR 15/4**			1102		613						–	191

FIELD AND PERFORMANCE DATA

50 Hz

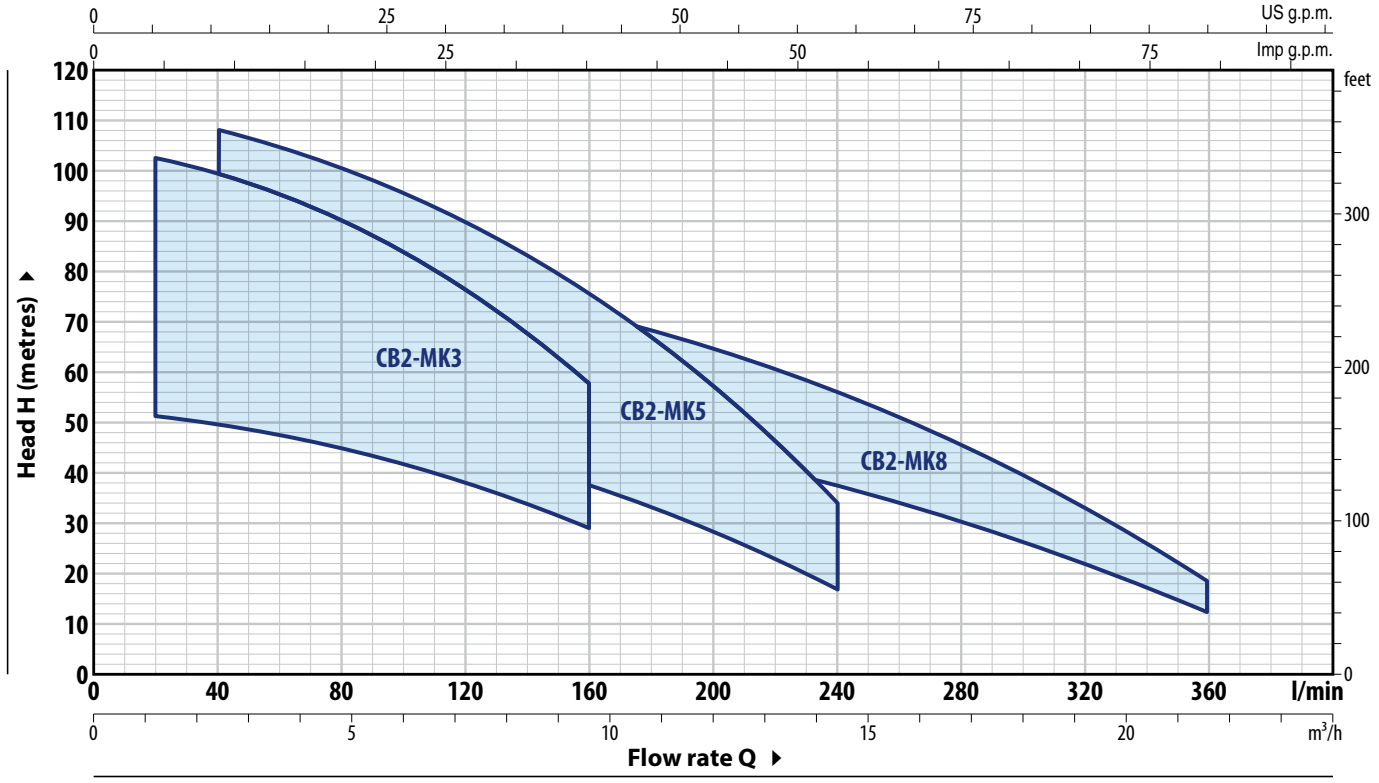

TYPE		POWER P2		Q m³/h	0	1.2	2.4	4.8	7.2	9.6	12.0	14.4	16.8	19.2	21.6
Single-phase	**Three-phase**	**kW**	**HP**	l/min	**0**	**20**	**40**	**80**	**120**	**160**	**200**	**240**	**280**	**320**	**360**
CB2 - MKm 3/3	**CB2 - MK 3/3**	2x0.75	2x1	H metres	52.5	51.5	50	45	38.5	29					
CB2 - MKm 3/5	**CB2 - MK 3/5**	2x1.1	2x1.5		87	85	83	75	64	48					
CB2 - MKm 3/6	**CB2 - MK 3/6**	2x1.5	2x2		105	103	100	90	77	58					
CB2 - MKm 5/4	**CB2 - MK 5/4**	2x0.75	2x1		57	–	54	50	45	37.5	28.5	17			
CB2 - MKm 5/5	**CB2 - MK 5/5**	2x1.1	2x1.5		71	–	67.5	62.5	56	47	35.5	21.5			
CB2 - MKm 5/7	**CB2 - MK 5/7**	2x1.5	2x2		99	–	95	88	78	66	50	30			
CB2 - MKm 5/8	**CB2 - MK 5/8**	2x2.2	2x3		114	–	108	100	90	75	57	34			
CB2 - MKm 8/4	**CB2 - MK 8/4**	2x1.1	2x1.5		56	–	–	53.5	51	47.5	43	37.5	30.5	22.1	12
CB2 - MKm 8/5	**CB2 - MK 8/5**	2x1.5	2x2		70	–	–	67	64	59.5	54	47	38	27.5	15.5
CB2 - MKm 8/6	**CB2 - MK 8/6**	2x2.2	2x3		84	–	–	80	77	72	64.5	56	45.5	33	18.5

Q = Flow rate **H** = Total manometric head

Performance curves comply with EN ISO 9906 Grade 3B tolerance limits.

※ **The data shown in the diagram and tables indicate performance with 2 pumps in operation**

CB2 – MK

PERFORMANCE CURVES

50 Hz

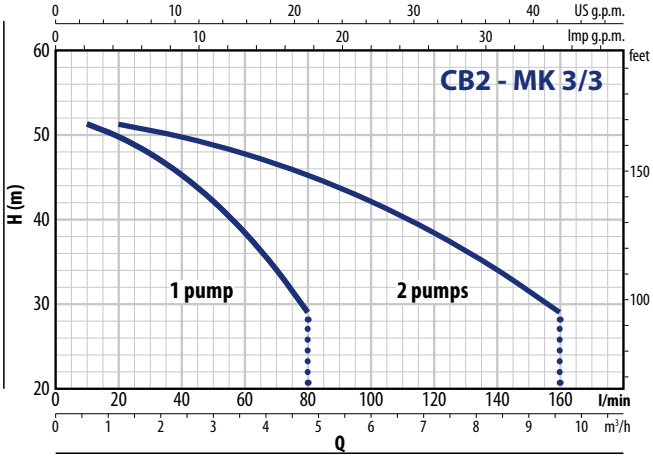

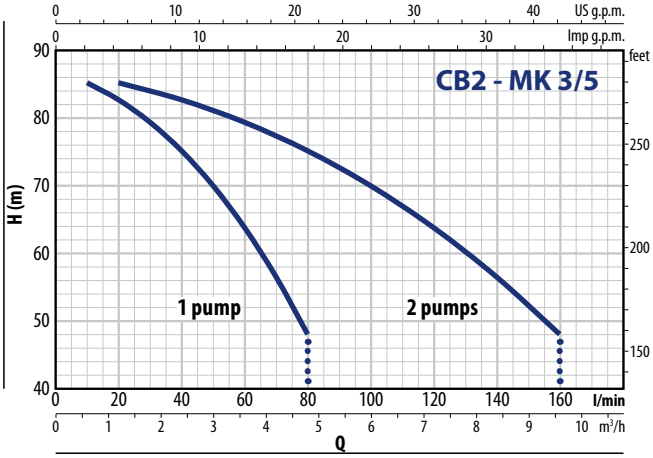

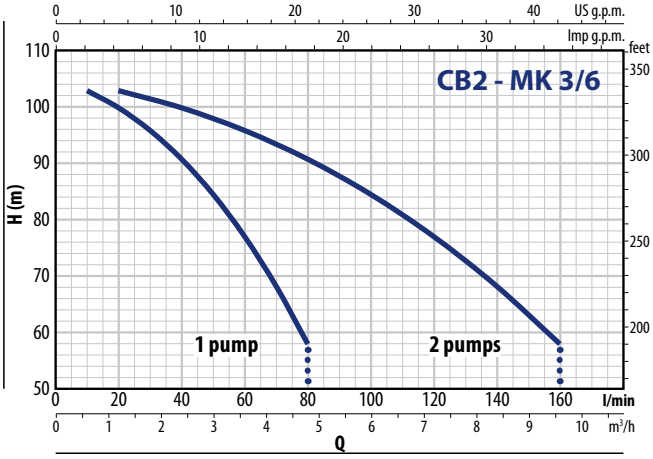

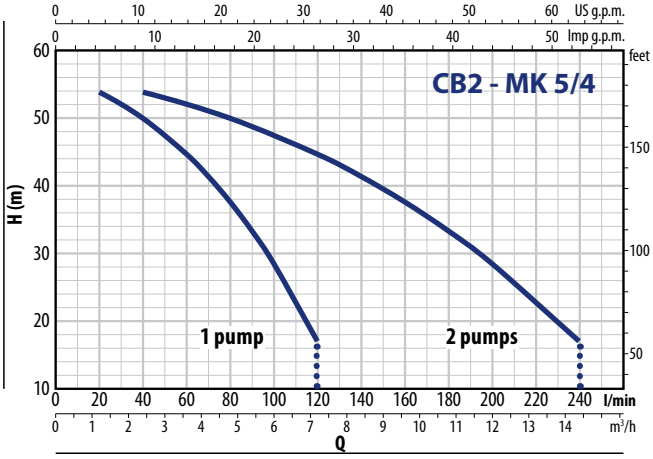

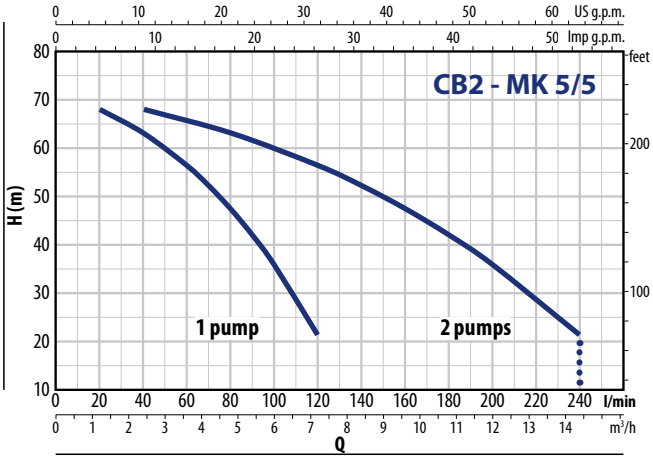

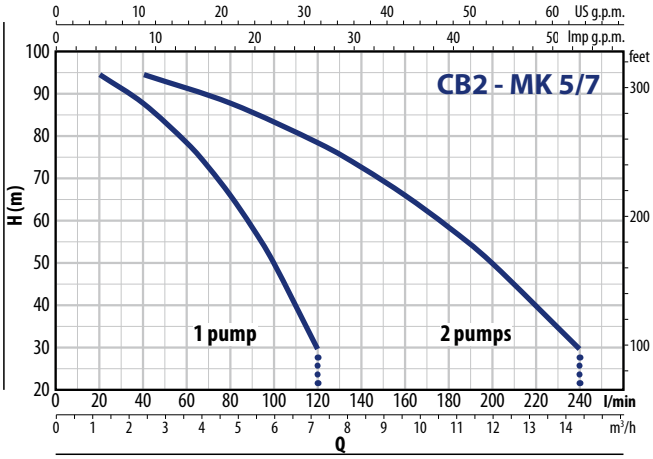

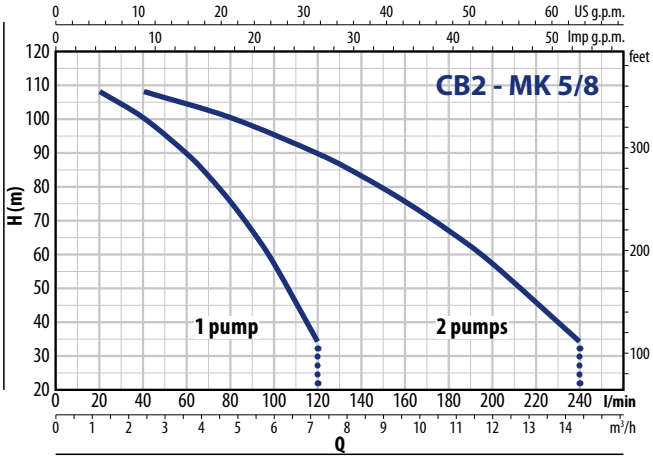

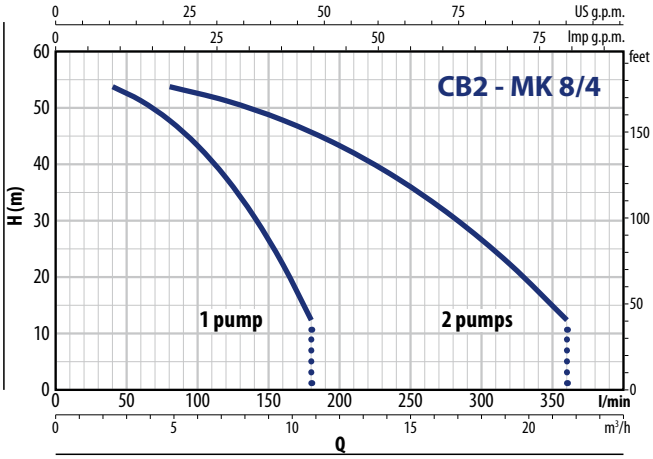

PERFORMANCE CURVES

50 Hz

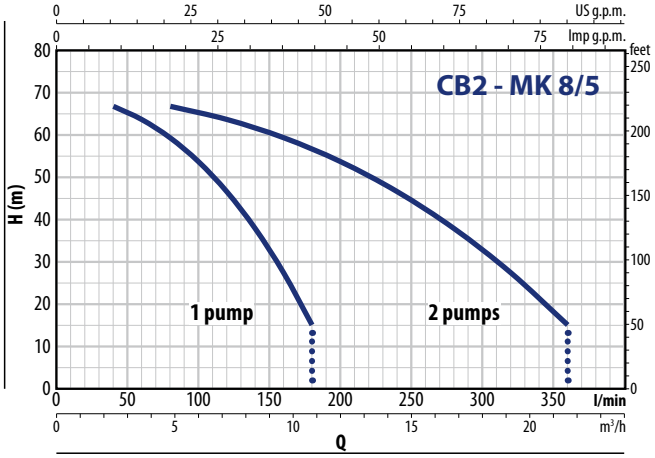

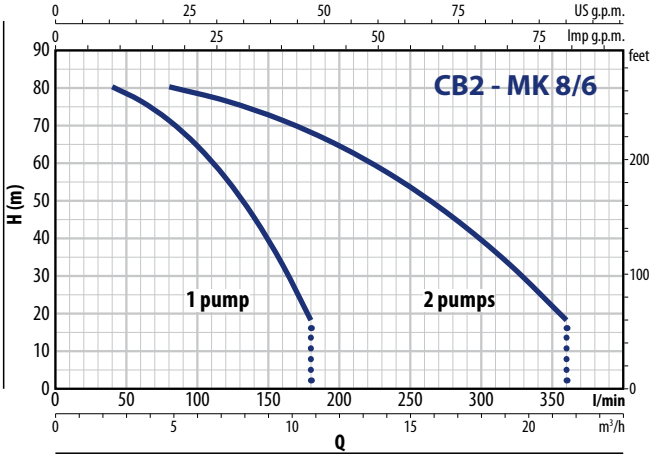

ABSORPTION

TYPE **Single-phase**	VOLTAGE **230 V**
CB2 - MKm 3/3	2 x 5.7 A
CB2 - MKm 3/5	2 x 7.8 A
CB2 - MKm 3/6	2 x 9.5 A
CB2 - MKm 5/4	2 x 5.7 A
CB2 - MKm 5/5	2 x 7.1 A
CB2 - MKm 5/7	2 x 9.3 A
CB2 - MKm 5/8	2 x 10.0 A
CB2 - MKm 8/4	2 x 7.8 A
CB2 - MKm 8/5	2 x 9.7 A
CB2 - MKm 8/6	2 x 11.1 A

TYPE **Three-phase**	VOLTAGE **400 V**
CB2 - MK 3/3	2 x 2.5 A
CB2 - MK 3/5	2 x 3.0 A
CB2 - MK 3/6	2 x 3.5 A
CB2 - MK 5/4	2 x 2.5 A
CB2 - MK 5/5	2 x 2.7 A
CB2 - MK 5/7	2 x 3.5 A
CB2 - MK 5/8	2 x 4.3 A
CB2 - MK 8/4	2 x 3.0 A
CB2 - MK 8/5	2 x 3.5 A
CB2 - MK 8/6	2 x 4.5 A

CB2 – MK

DIMENSIONS AND WEIGHT

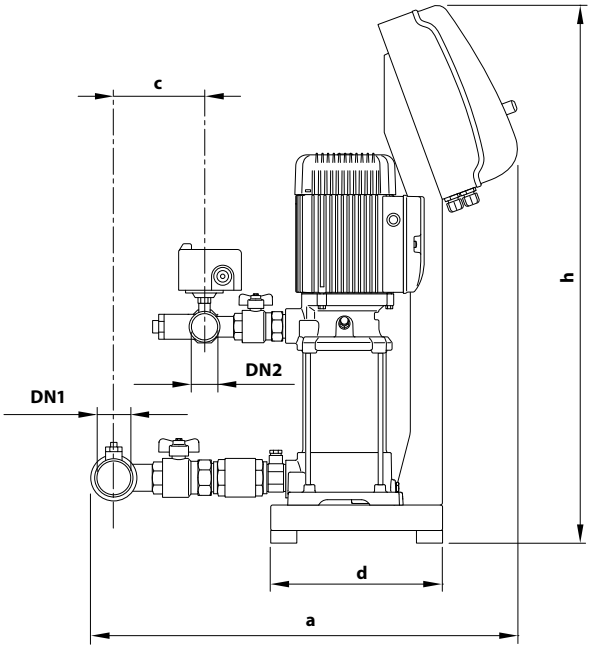

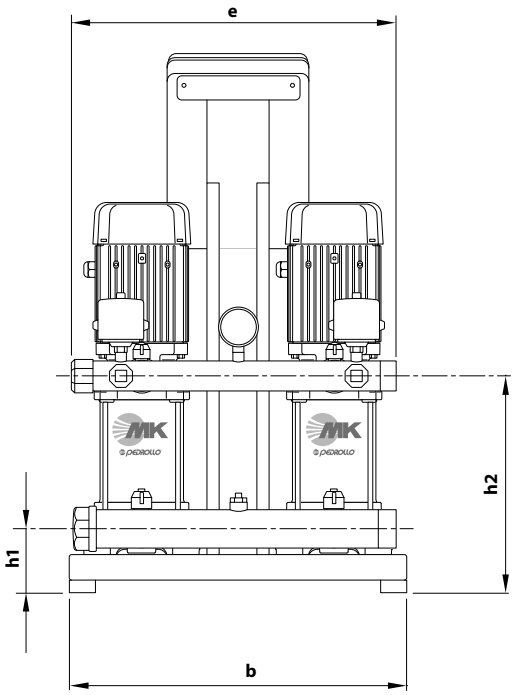

TYPE		PORTS		DIMENSIONS mm								kg	
Single-phase	**Three-phase**	DN1	DN2	a	b	c	d	e	h	h1	h2	1~	3~
CB2 - MKm 3/3	**CB2 - MK 3/3**										234	75.0	73.0
CB2 - MKm 3/5	**CB2 - MK 3/5**										288	76.0	77.0
CB2 - MKm 3/6	**CB2 - MK 3/6**										315	80.0	81.0
CB2 - MKm 5/4	**CB2 - MK 5/4**	**2"**		673		135					261	76.0	74.0
CB2 - MKm 5/5	**CB2 - MK 5/5**										288	76.0	77.0
CB2 - MKm 5/7	**CB2 - MK 5/7**		**1½"**		530		270	510	854	102	342	81.0	81.0
CB2 - MKm 5/8	**CB2 - MK 5/8**										369	82.0	82.0
CB2 - MKm 8/4	**CB2 - MK 8/4**										261	80.0	81.0
CB2 - MKm 8/5	**CB2 - MK 8/5**	**2½"**		719		171					288	81.0	81.0
CB2 - MKm 8/6	**CB2 - MK 8/6**										315	87.0	87.0

FIELD AND PERFORMANCE DATA

50 Hz

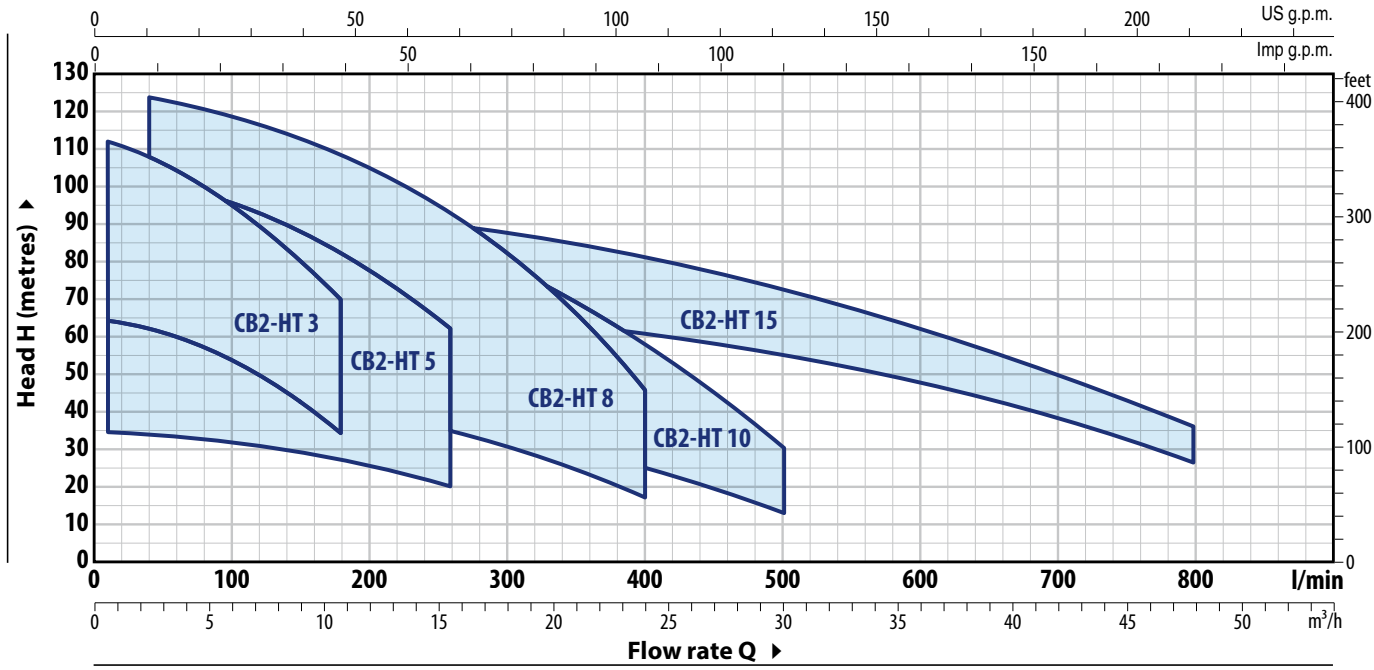

TYPE		POWER (P2)		Q									
Single-phase	Three-phase	kW	HP		m³/h	0	0.6	1.2	2.4	4.8	7.2	9.6	10.8
					l/min	**0**	**10**	**20**	**40**	**80**	**120**	**160**	**180**
CB2 - HTm 3/4	CB2 - HT 3/4	2x0.75	2x1	H metres		65	65	63.5	62	57	50	40.5	35
CB2 - HTm 3/5	CB2 - HT 3/5	2x1.1	2x1.5			81	80	79	77	71	62.5	51	44
CB2 - HTm 3/6	CB2 - HT 3/6	2x1.5	2x2			97	96	95	93	86	75	61	52
–	CB2 - HT 3/7	2x1.8	2x2.5			113	112	111	108	100	88	71	61

TYPE		POWER (P2)		Q											
Single-phase	Three-phase	kW	HP		m³/h	0	0.6	1.2	2.4	4.8	7.2	9.6	10.8	12	15.6
					l/min	**0**	**10**	**20**	**40**	**80**	**120**	**160**	**180**	**200**	**260**
CB2 - HTm 5/2	CB2 - HT 5/2	2x0.75	2x1	H metres		35	35	32.7	32.3	32.5	31	25.5	27.5	26	20.5
CB2 - HTm 5/3	CB2 - HT 5/3	2x1.1	2x1.5			51.5	51.5	51	50.5	49	46.5	43	41	39	31
CB2 - HTm 5/4	CB2 - HT 5/4	2x1.5	2x2			68.5	68.5	68	67	65	62	57.5	55	52	41
–	CB2 - HT 5/5	2x1.8	2x2.5			86	85	85	84	81	77	72	68.5	65	51.5
–	CB2 - HT 5/6	2x2.2	2x3			103	103	102	101	98	93	86	82	78	62

TYPE		POWER (P2)		Q												
Single-phase	Three-phase	kW	HP		m³/h	0	2.4	4.8	7.2	9.6	12	14.4	16.8	19.2	21.6	24
					l/min	**0**	**40**	**80**	**120**	**160**	**200**	**240**	**280**	**320**	**360**	**400**
CB2 - HTm 8/3	CB2 - HT 8/3	2x1.1	2x1.5	H metres		47	46.5	45.5	44	42	39.5	36.5	32.5	28	23.1	17
CB2 - HTm 8/4	CB2 - HT 8/4	2x1.5	2x2			62.5	62	60.5	58.5	56	53	48.5	43.5	37.5	31	23
–	CB2 - HT 8/5	2x1.8	2x2.5			78	77.5	76	73	70	66	61	54.5	47	38.5	28.5
–	CB2 - HT 8/6	2x2.2	2x3			94	93	91	88	84	79	73	65.5	56.5	46	34.5
※ –	CB2 - HT 8/7	2x3	2x4			109	108	106	103	98	92	85	76	66	54	40

TYPE		POWER (P2)		Q												
Single-phase	Three-phase	kW	HP		m³/h	0	3.6	6	7.2	9.6	14.4	18	20.4	24	26.4	30
					l/min	**0**	**60**	**100**	**120**	**160**	**240**	**300**	**340**	**400**	**440**	**500**
※ CB2 - HTm 10/3	CB2 - HT 10/3	2x1.5	2x2	H metres		47	45.5	44	43.5	42	38	33.5	30.5	24.7	20.3	13
※ CB2 - HTm 10/4	CB2 - HT 10/4	2x1.8	2x2.5			62	61	59	58	56	50.5	45	40.5	33	27	18
※ –	CB2 - HT 10/5	2x2.2	2x3			77	75.5	74	73	70	63	56	50.5	41	34	21.5
※ –	CB2 - HT 10/6	2x3	2x4			93	91	88	87	84	76	67.5	61	49.5	40.5	26
※ –	CB2 - HT 10/7	2x3	2x4			108	106	103	102	98	88	79	71	57.5	47.5	30

TYPE		POWER (P2)		Q							
Single-phase	Three-phase	kW	HP		m³/h	0	6	12	24	36	42	48
					l/min	**0**	**100**	**200**	**400**	**600**	**700**	**800**
–	CB2 - HT 15/3	2x4	2x5.5	H metres		72	70	68.5	61	48	38.5	27
–	CB2 - HT 15/4	2x5.5	2x7.5			96	94	91	81	64	51.5	36

Q = Flow rate **H** = Total manometric head

Performance curves comply with EN ISO 9906 Grade 3B tolerance limits.

※ The data shown in the diagram and tables indicate performance with 2 pumps in operation

CB2 – HT

PERFORMANCE CURVES

50 Hz

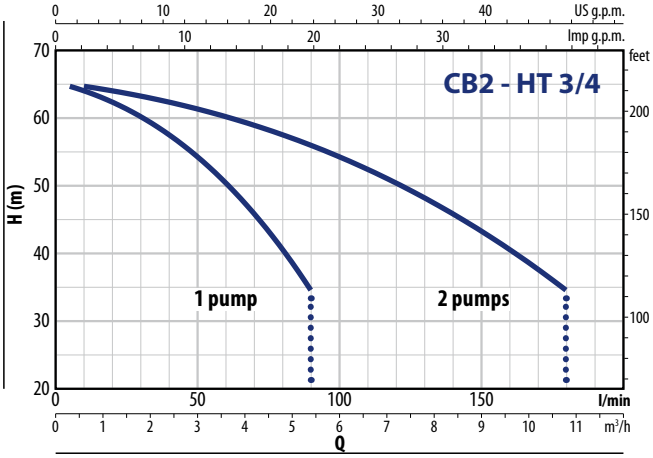

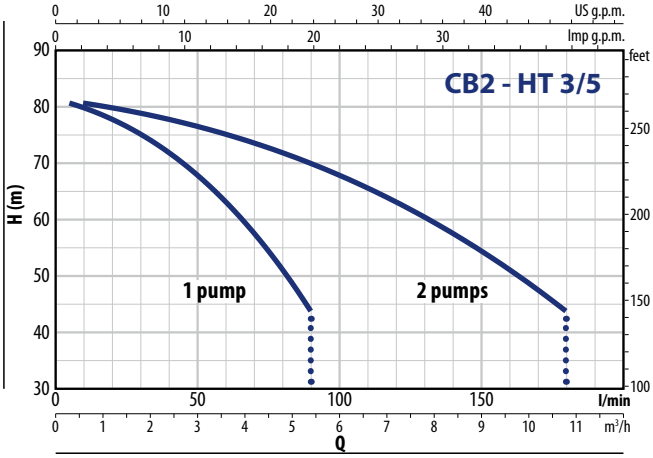

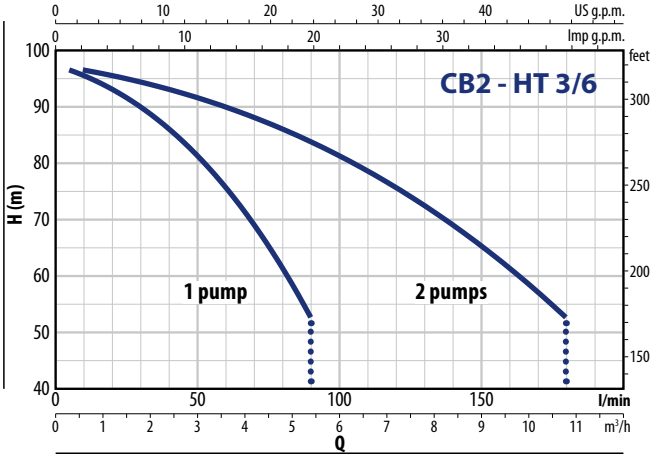

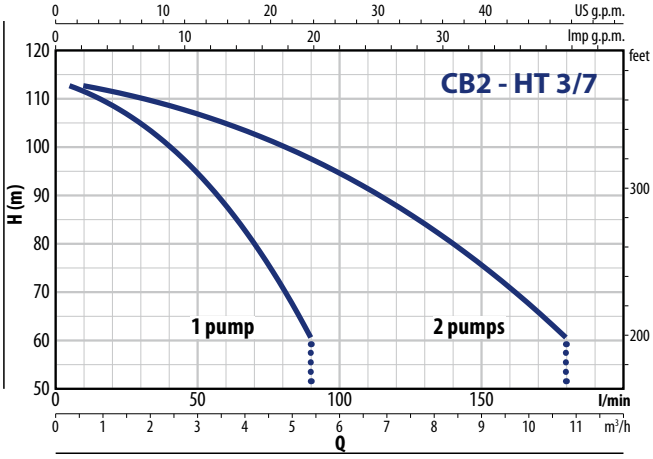

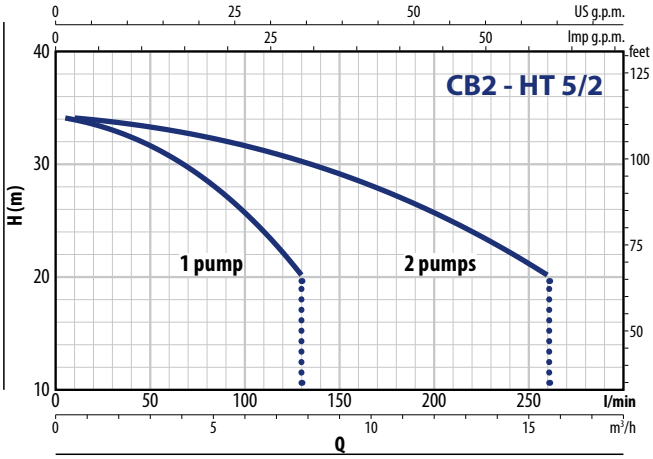

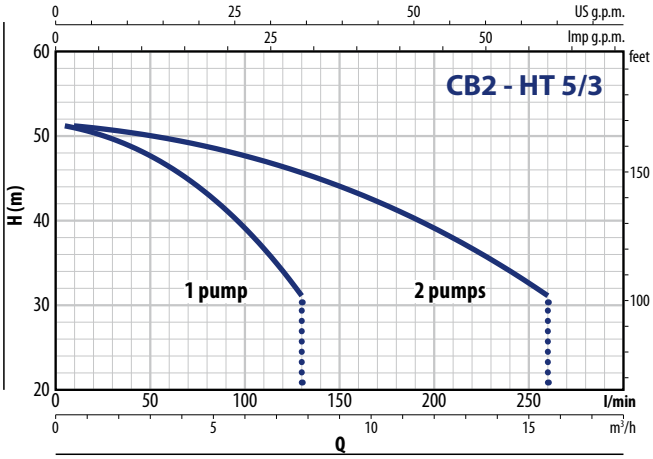

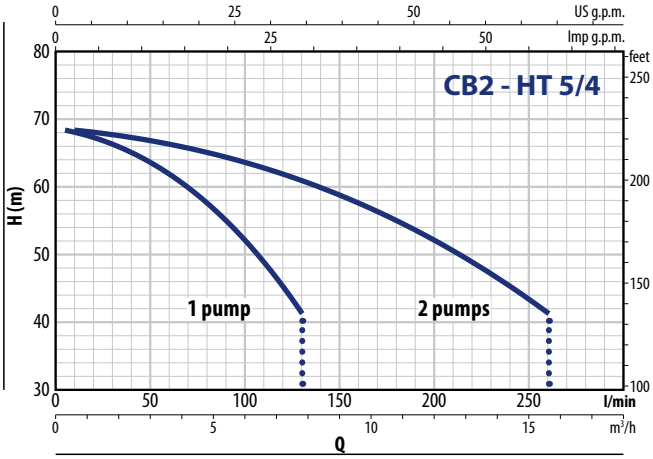

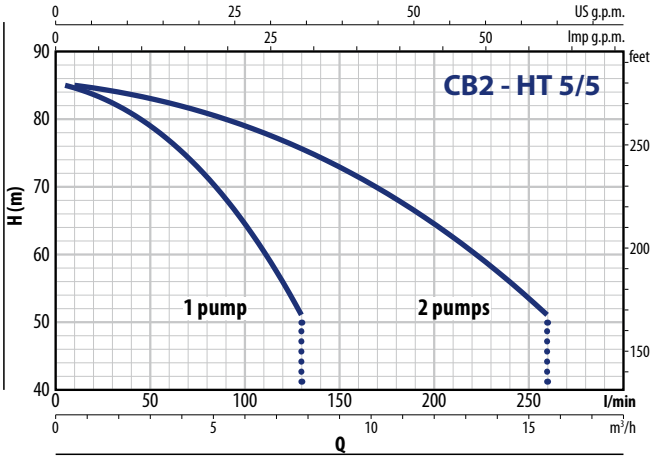

PERFORMANCE CURVES

50 Hz

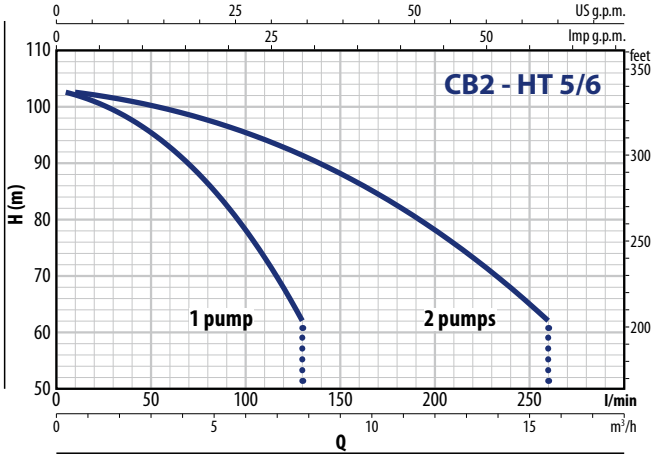

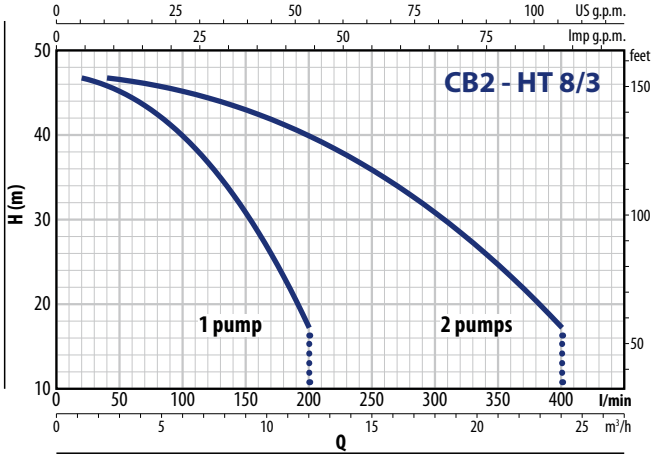

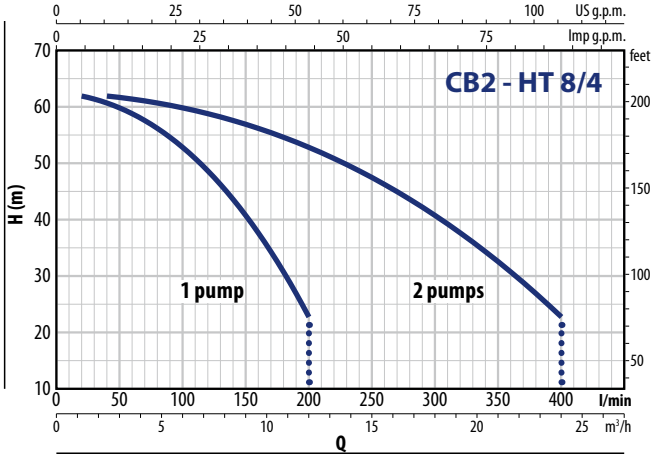

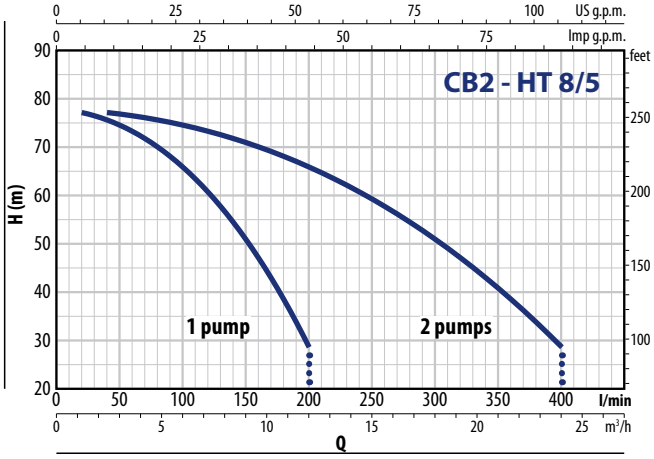

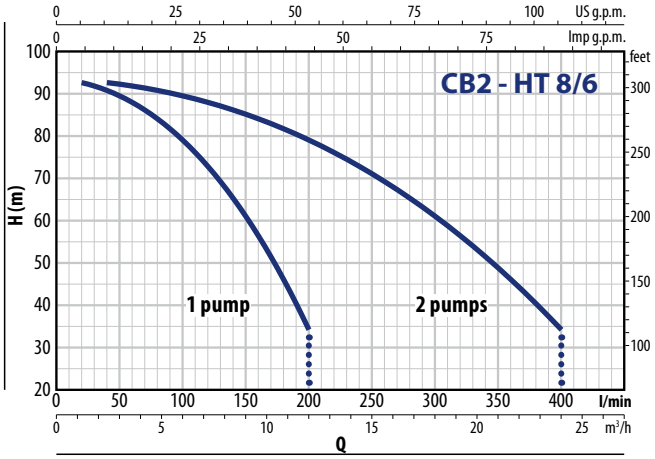

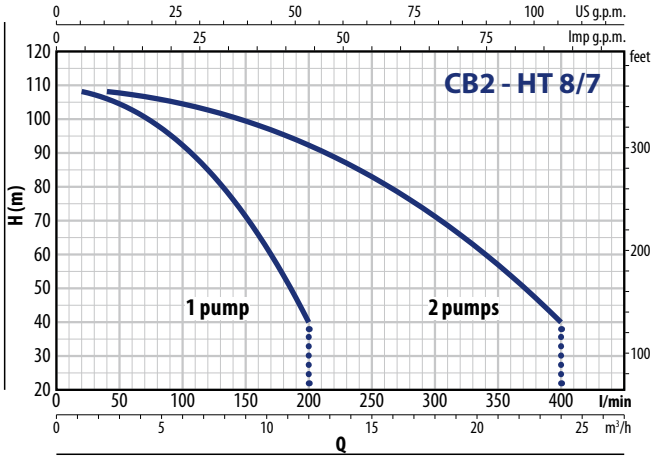

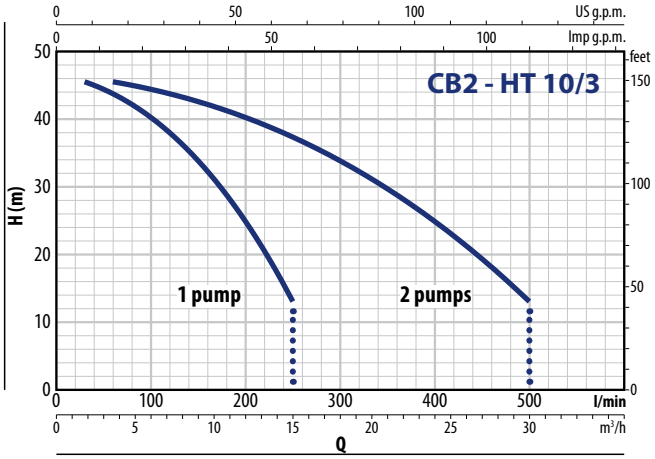

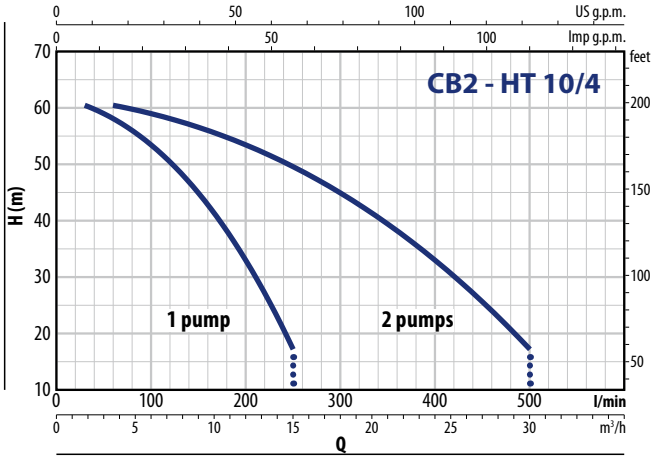

CB2 – HT

PERFORMANCE CURVES

50 Hz

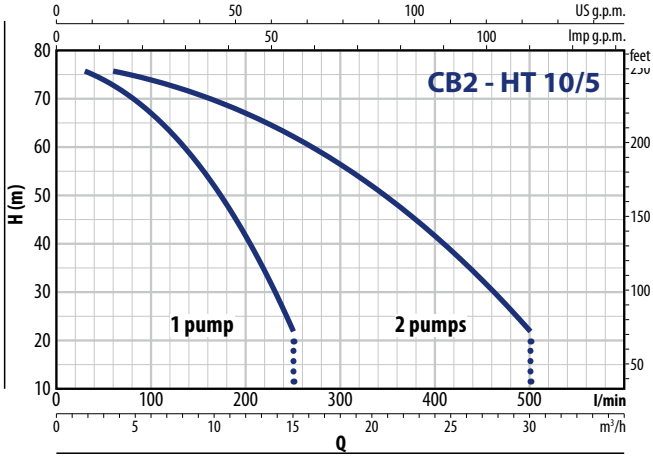

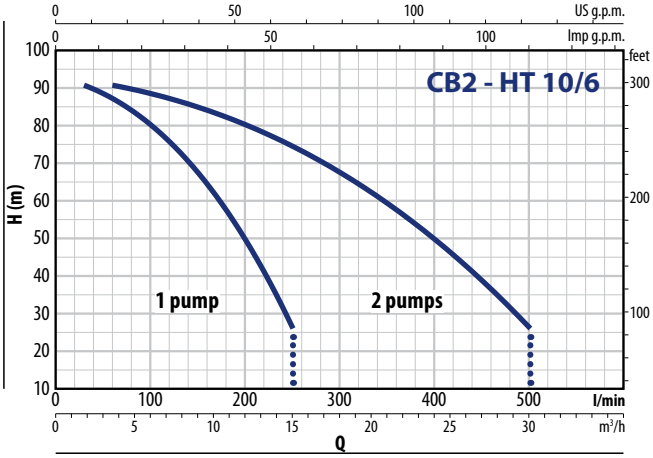

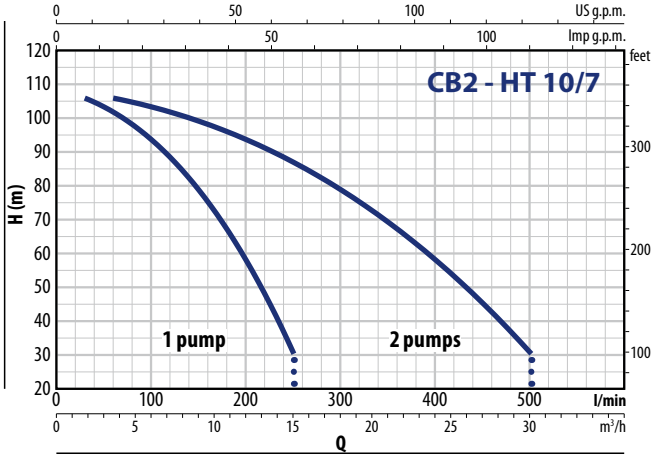

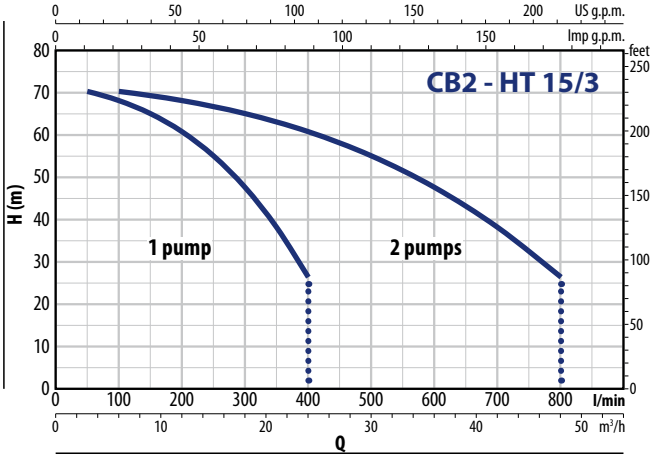

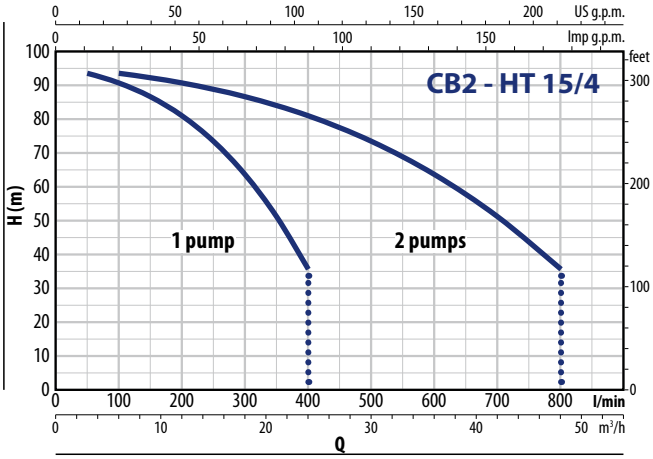

ABSORPTION

TYPE **Single-phase**	VOLTAGE **230 V**
CB2 - HTm 3/4	2 x 7.5 A
CB2 - HTm 3/5	2 x 9.0 A
CB2 - HTm 3/6	2 x 10.5 A
CB2 - HTm 5/2	2 x 6.1 A
CB2 - HTm 5/3	2 x 8.5 A
CB2 - HTm 5/4	2 x 10.3 A
CB2 - HTm 8/3	2 x 8.7 A
CB2 - HTm 8/4	2 x 10.5 A
CB2 - HTm 10/3	2 x 9.5 A
CB2 - HTm 10/4	2 x 11.0 A

TYPE **Three-phase**	VOLTAGE **400 V**
CB2 - HT 3/4	3.0 A
CB2 - HT 3/5	3.5 A
CB2 - HT 3/6	4.0 A
CB2 - HT 3/7	4.8 A

TYPE **Three-phase**	VOLTAGE **400 V**
CB2 - HT 5/2	2 x 2.8 A
CB2 - HT 5/3	2 x 3.2 A
CB2 - HT 5/4	2 x 3.8 A
CB2 - HT 5/5	2 x 4.8 A
CB2 - HT 5/6	2 x 5.2 A
CB2 - HT 8/3	2 x 3.3 A
CB2 - HT 8/4	2 x 4.0 A
CB2 - HT 8/5	2 x 4.8 A
CB2 - HT 8/6	2 x 5.4 A
CB2 - HT 8/7	2 x 7.0 A
CB2 - HT 10/3	2 x 3.4 A
CB2 - HT 10/4	2 x 4.5 A
CB2 - HT 10/5	2 x 5.2 A
CB2 - HT 10/6	2 x 6.5 A
CB2 - HT 10/7	2 x 7.2 A
CB2 - HT 15/3	2 x 8.8 A
CB2 - HT 15/4	2 x 11.2 A

DIMENSIONS AND WEIGHT

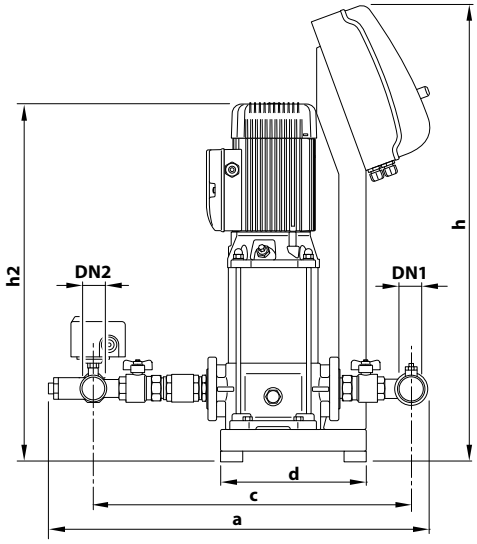

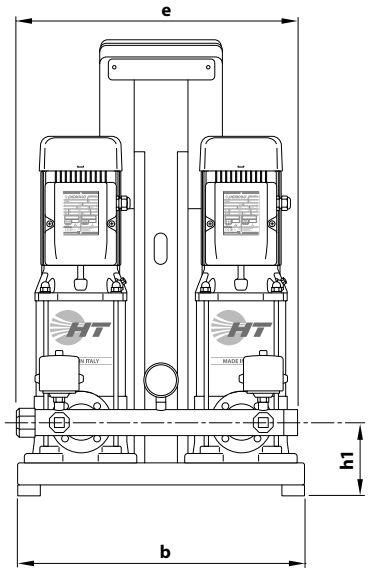

TYPE		PORTS		DIMENSIONS mm								kg	
Single-phase	**Three-phase**	DN1	DN2	a	b	c	d	e	h	h1	h2	1~	3~
CB2 - HTm 3/4	**CB2 - HT 3/4**	**2"**	**2"**	732	530	614	270	510	674	135	569	99	100
CB2 - HTm 3/5	**CB2 - HT 3/5**										595	100	100
CB2 - HTm 3/6	**CB2 - HT 3/6**								854		621	102	102
–	**CB2 - HT 3/7**										667	–	112
CB2 - HTm 5/2	**CB2 - HT 5/2**	**2"**	**2"**	779	530	661	270	510	674	135	517	99	100
CB2 - HTm 5/3	**CB2 - HT 5/3**										543	99	100
CB2 - HTm 5/4	**CB2 - HT 5/4**										569	103	104
–	**CB2 - HT 5/5**								854		615	–	109
–	**CB2 - HT 5/6**										641	–	111
CB2 - HTm 8/3	**CB2 - HT 8/3**	**2½"**	**2½"**	873	530	738	270	521	674	140	548	106	107
CB2 - HTm 8/4	**CB2 - HT 8/4**										574	110	111
–	**CB2 - HT 8/5**								854		620	–	119
–	**CB2 - HT 8/6**										646	–	120
–	**CB2 - HT 8/7**				700		370		674		724	–	145
CB2 - HTm 10/3	**CB2 - HT 10/3**	**2½"**	**2½"**	873	530	738	270	521	674	140	548	107	107
CB2 - HTm 10/4	**CB2 - HT 10/4**										594	111	111
–	**CB2 - HT 10/5**								854		620	–	119
–	**CB2 - HT 15/3**	**3"**	**3"**	993	700	850	370	728	674	150	693	–	175
–	**CB2 - HT 15/4**										737	–	187

TISSEL-100 Pumps with inverters

Clean water

Domestic use

Civil use

TS1-4CP 100

TS1-5CR 100

TS1-2CP

INSTALLATION AND USE

The **TISSEL-100** is a pumping unit designed for water supply and pressure boosting in residential settings, as well as for irrigation purposes. It seamlessly integrates with various pressurization systems, including existing ones, ensuring optimal comfort and significant energy savings.

PRODUCT DESCRIPTION

TISSEL-100 is a system comprising a pump and a water flow inverter with an integrated pressure sensor. It adjusts the motor speed based on water demand, maintaining constant system pressure.

TISSEL-100 is a plug-and-play product requiring no configuration. Users can adjust the system's working pressure and view operating parameters or alarms via the user interface. Experienced users can access advanced menus to customize factory settings for specific plant conditions. TISSEL-100 includes a pump and a water flow inverter with an integrated pressure sensor, ensuring consistent pressure by adjusting motor speed based on water demand.

TISSEL-100 is a plug-and-play product that eliminates the need for configuration procedures. Users can easily adjust the system's operating pressure and monitor essential parameters or alarm messages via the user interface.
For advanced users, TISSEL-100 provides access to advanced menus for modifying factory parameters, allowing customization to meet specific facility conditions or system requirements.

TISSEL-100 is designed to protect the system from:

※ dry running
※ overcurrent
※ overvoltage and undervoltage
※ combustion chamber
※ short circuit

TECHNICAL DATA

- Power supply: **1~ 230 V** ± 10%
- Output voltage: **3~ 230 V**
- Frequency: **50/60 Hz**
- Maximum liquid temperature: **+40 °C**
- Maximum ambient temperature: **+40 °C**

COMPONENTS INCLUDED

※ Three-phase pump
※ Variable frequency drive with integrated non-return valve
※ GSR quick-connect coupling
※ 1.5 metres cable with Schuko plug

KEY FEATURES

※ **Plug&Play** solution, ease of installation, and quick start-up
※ Enhanced comfort ensured by consistent pressure operation
※ Save energy with lower pump consumption.
※ Protects the pump from faults by monitoring hydraulic and electrical operating parameters
※ Reduced noise operation

PERFORMANCE RANGE

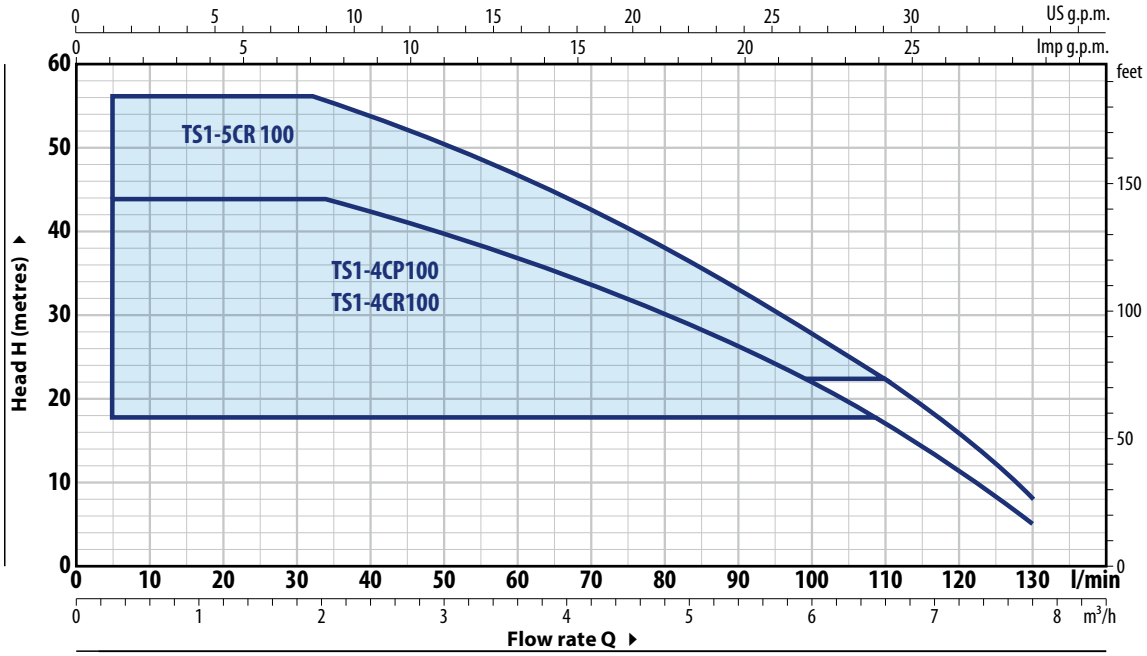

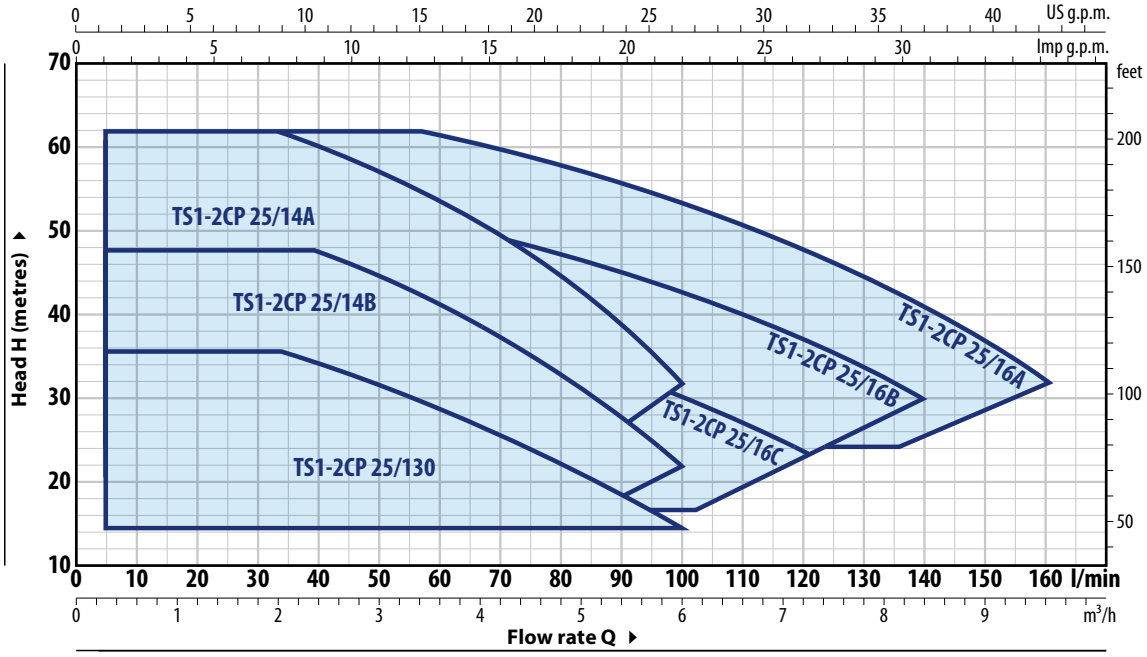

TYPE	POWER P2			ABSORPTION	PERFORMANCE		PERFORMANCE (ADJUSTABLE SET POINT)					
				230 V	Q	H	Set Point Min		Set Point Calibration Std		Set Point Max	
Single-phase	kW	HP	▲		litres/min	metres	bar	litres/min	bar	litres/min	bar	litres/min
TS1-4CP 100	0.75	1		9.2 A	5 – 130	44 – 5	1.8	5 – 107	**3.0**	5 – **80**	4.3	5 – 33
TS1-4CR 100	0.75	1	**IE3**	9.2 A	5 – 130	44 – 5	1.8	5 – 107	**3.0**	5 – **80**	4.3	5 – 33
TS1-5CR 100	0.90	1.25		10.0 A	5 – 130	56 – 8	2.2	5 – 107	**3.7**	5 – **80**	5.5	5 – 33
TS1-2CP 25/130	0.75	1		9.5 A	5 – 100	36 – 15	1.5	5 – 100	**2.5**	5 – **67**	3.5	5 – 34
TS1-2CP 25/14B	1.1	1.5		10.5 A	5 – 100	48 – 22	1.9	5 – 92	**3.6**	5 – **70**	4.7	5 – 35
TS1-2CP 25/14A	1.5	2		16.0 A	5 – 100	61 – 32	2.4	5 – 85	**4.8**	5 – **70**	6.0	5 – 35
TS1-2CP 25/16C	1.1	1.5	**IE3**	11.5 A	5 – 120	41 – 24	1.7	5 – 100	**3.2**	5 – **85**	4.0	5 – 52
TS1-2CP 25/16B	1.5	2		13.5 A	5 – 140	52 – 30	2.0	5 – 110	**4.1**	5 – **100**	5.1	5 – 52
TS1-2CP 25/16A	2.2	3		21.5 A	5 – 160	62 – 32	2.4	5 – 135	**4.8**	5 (115)	6.1	5 – 52

Q = Flow rate **H** = Total manometric head

▲ Three-phase motor efficiency class (IEC 60034-30-1)

TISSEL-100

PERFORMANCE CURVES

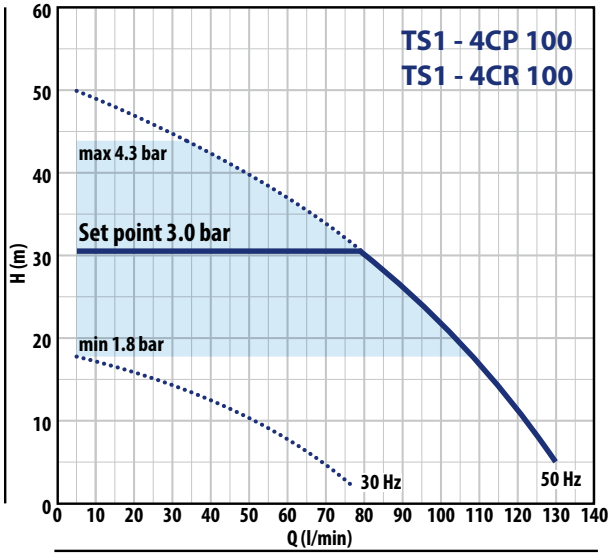

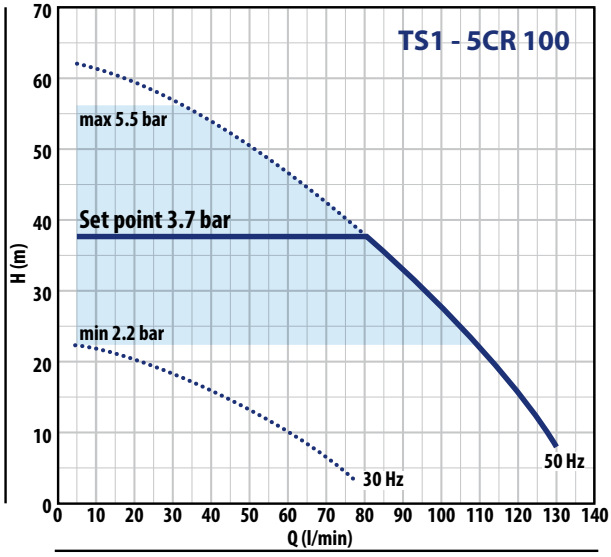

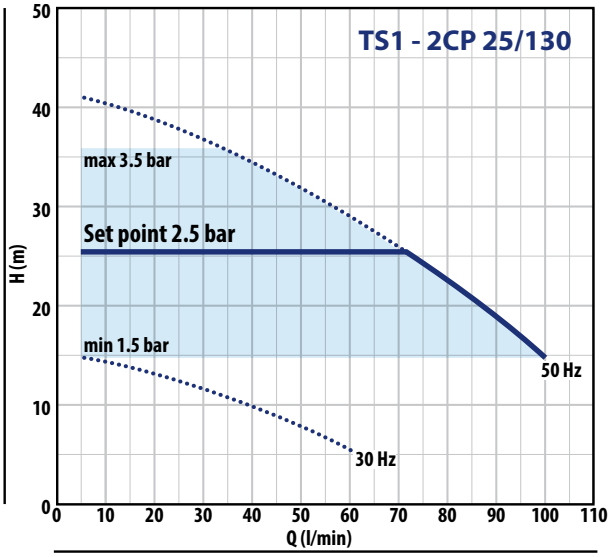

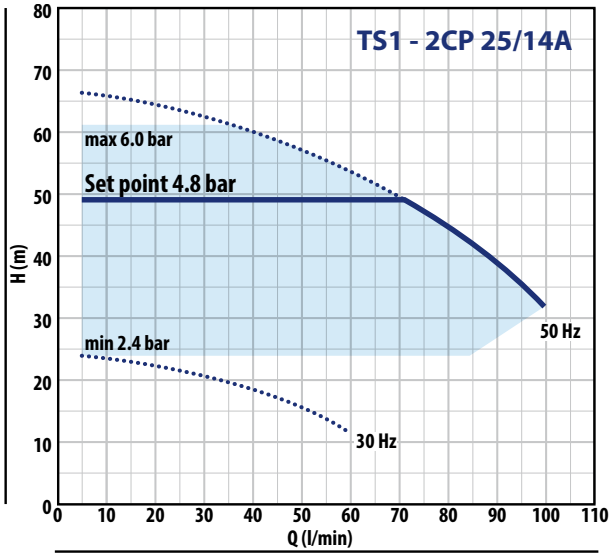

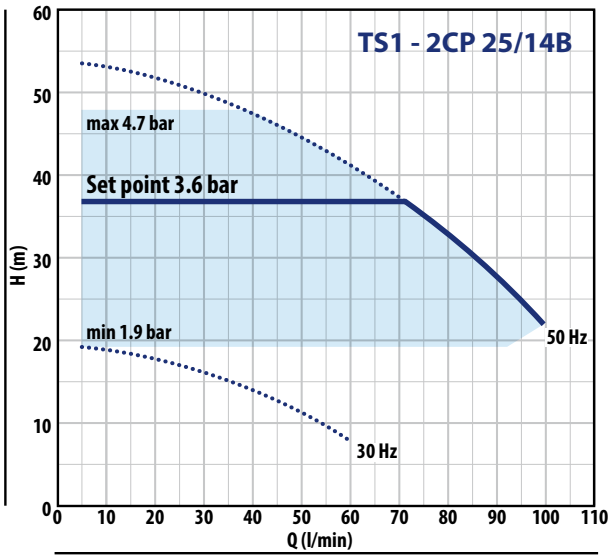

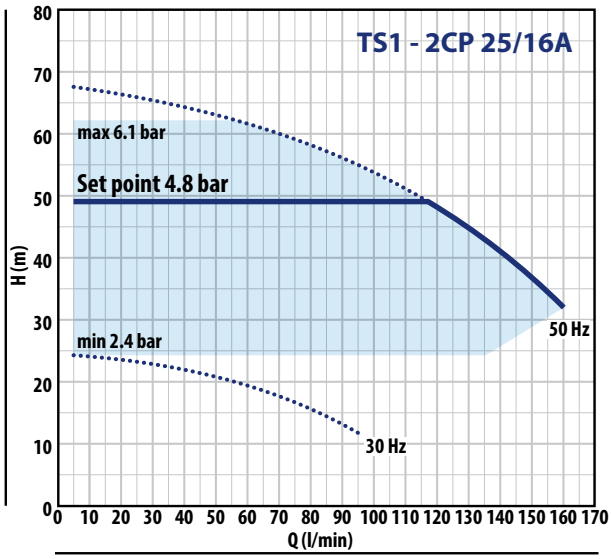

PERFORMANCE CURVES

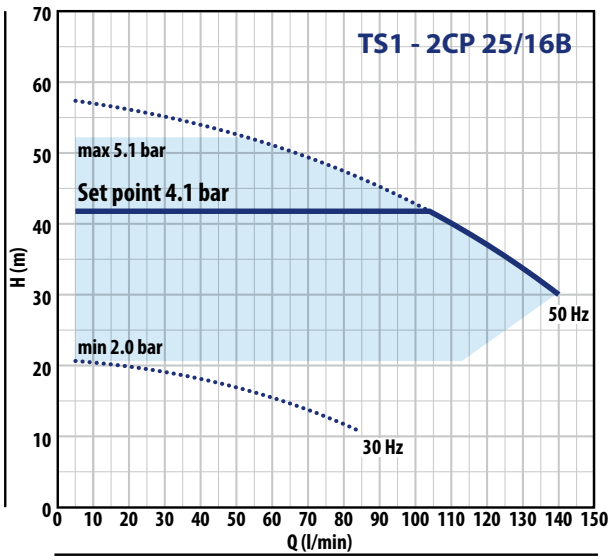

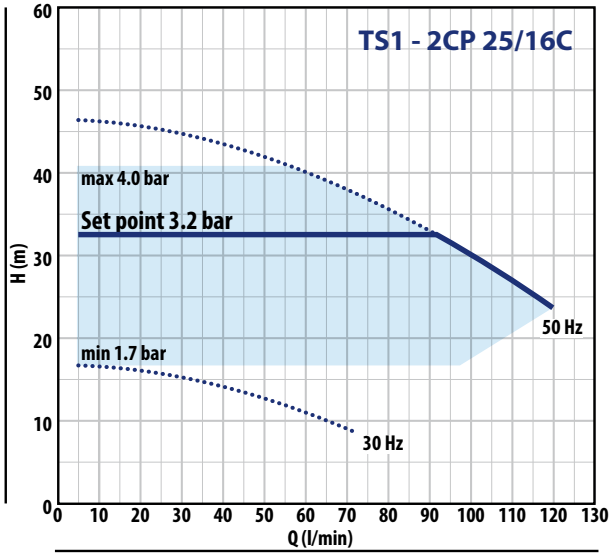

DIMENSIONS (mm)

TS1-4CP 100

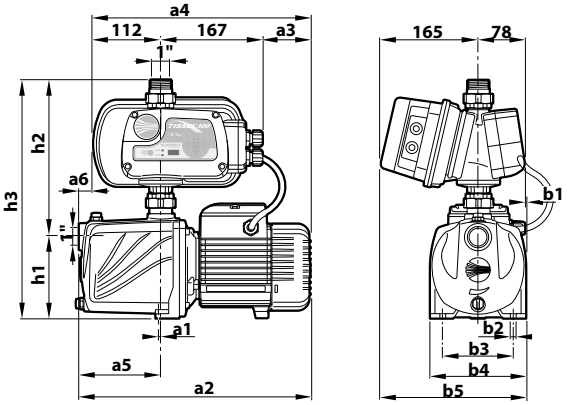

TS1-4CR 100X – TS1-5CR 100

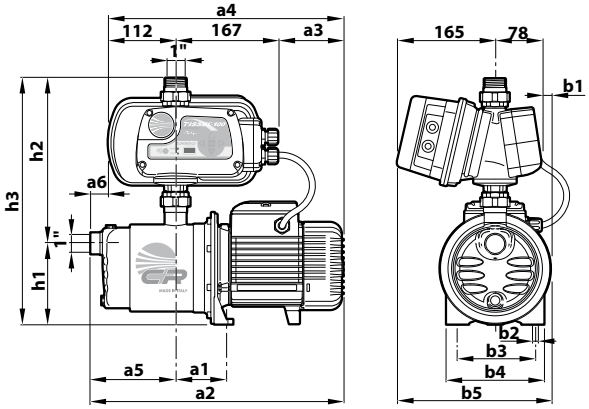

TS1-2CP 25/130

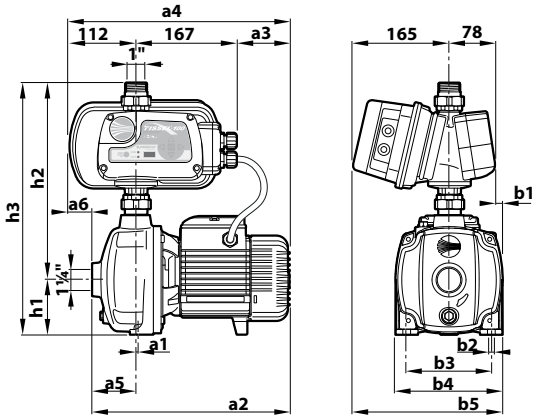

TS1-2CP 25/14 – TS1-2CP 25/16

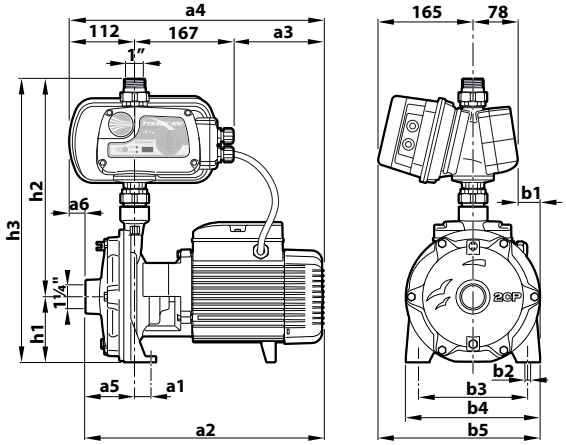

TYPE	a1	a2	a3	a4	b1	b2	b3	b4	b5	h1	h2	h3	kg
TS1-4CP 100	1.5	382	79	358	1	9	116	158	244	134	268	402	21.7
TS1-4CR 100	87	411	106	385	13	10	120	182	256	132	280	412	18.5
TS1-5CR 100	87	411	106	385	13	10	120	182	256	132	280	412	18.5
TS1-2CP 25/130	1	330	90	369	12	10	142	180	255	92	339	431	22.7
TS1-2CP 25/14B	17	404	155	434	22	10	162	200	265	93	360	453	28.6
TS1-2CP 25/14A	26	404	155	434	34	11	185	225	278	110	381	491	32.6
TS1-2CP 25/16C	17	404	155	434	22	10	162	200	265	93	360	453	28.4
TS1-2CP 25/16B	26	404	155	434	34	11	185	225	278	110	381	491	32.4
TS1-2CP 25/16A	26	424	175	454	34	11	185	225	278	110	381	491	35.2

VSP Pumps with inverters

Clean water

Domestic use

Civil use

INSTALLATION AND USE

VSP is a versatile pumping unit designed for various applications. It's ideal for residential and commercial use, providing water supply and pressure boosting.
VSP seamlessly integrates with any pressurization system, including existing ones, ensuring maximum comfort and enabling significant energy savings.

PRODUCT DESCRIPTION

VSP is a system comprising a pump and an integrated frequency converter. Equipped with a pressure sensor, it ensures a constant pressure as the system's water demand fluctuates.

This ready-to-use product eliminates the need for configuration procedures. Users can adjust the working pressure and view operating parameters and alarm messages via the user interface.

For advanced users, the system offers access to an advanced menu for modifying factory parameters through a guided procedure, allowing adaptation to specific plant conditions.

VSP is an intelligent pumping unit, equipped with:
※ **display and keypad** allowing simple and intuitive configuration and reading of operating parameters;
※ interface ports for additional **analogue** and **digital** input and output **signals**;
※ **PFC technology** maintains hydraulic performance unaffected even when supply voltages vary within ±20% of the nominal value;
※ **RS 485 communication** for connection to a second device in parallel.

Integrated protection against:
※ dry running
※ overcurrent
※ overvoltage and undervoltage
※ combustion chamber
※ short circuit
※ lack of phases in the connections (for three-phase version)

TECHNICAL DATA

- Power supply:
  – **1~ 230V±10%** or **3~ 400V±10%**
  – Frequency: **50/60 Hz**
- Please refer to the technical data of the specific electropumps for liquid temperature, ambient temperature, and protection degree.

KEY FEATURES

※ Easy installation, configuration, and adjustment.
※ Greater comfort, thanks to optimized performance and low noise levels.
※ Energy saving reduces startup and operating currents, ensuring.
※ Automatic compensation for fluctuations in the supply voltage.
※ Communication with another device to enhance system capabilities.
※ Intelligent management of control and intervention in case of anomalies.

USER INTERFACE

It enables access to configuration menus, navigation through settings, adjustment of operating parameters, and activation or deactivation of the pumping unit.

1. Scroll arrow keys ▼ ▲
2. ESC menu exit key ESC
3. ON/OFF button ⏻
4. Confirmation button OK OK
5. 4-backlit display to indicate the operating status of the VSP

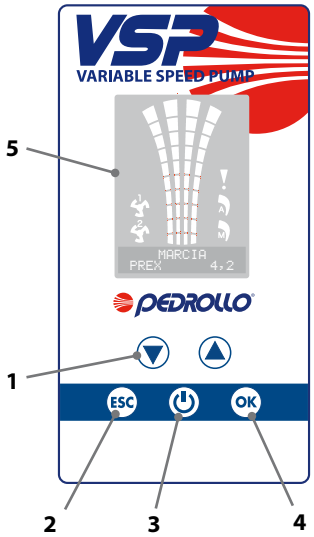

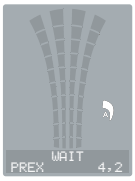

WHITE display EXPECTATION

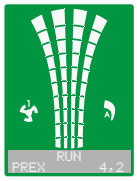

Display VERDE START

RED display ERROR

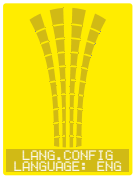

YELLOW display (MENU OF PROGRAMMING

DISPLAY SYMBOLS

6. ALARM warning light !

7. AUTOMATIC operation indicator light A

8. MANUAL operation indicator light M

9. Indicator light for running pump no. 1

10. Indicator light for running pump no. 2 (if present)

11. WI-FI active indicator light (if present)

12. Alphanumeric display with 2 lines for visualization of: voltage, frequency, current, power factor (cosφ), pressure, level, system operating status, system anomalies.

13. VSP operating status LED lights

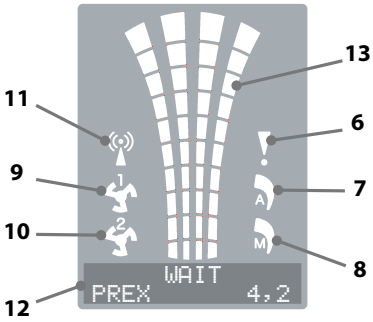

TYPICAL INSTALLATION

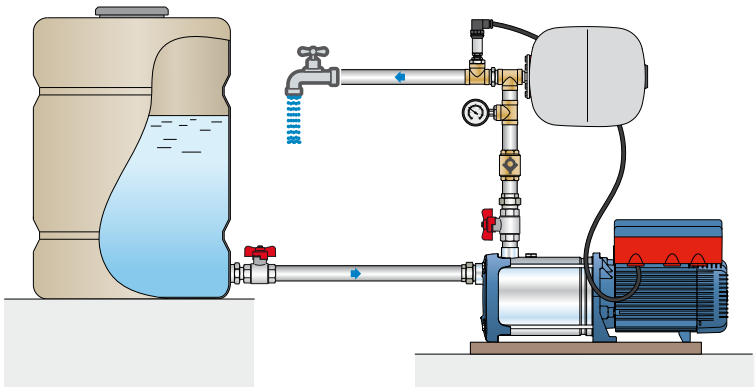

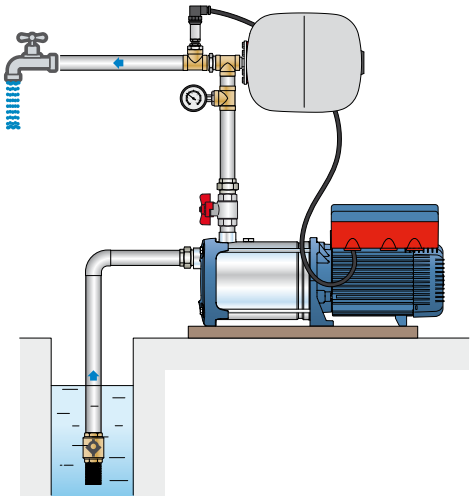

VSP – FCR

PERFORMANCE RANGE

50 Hz

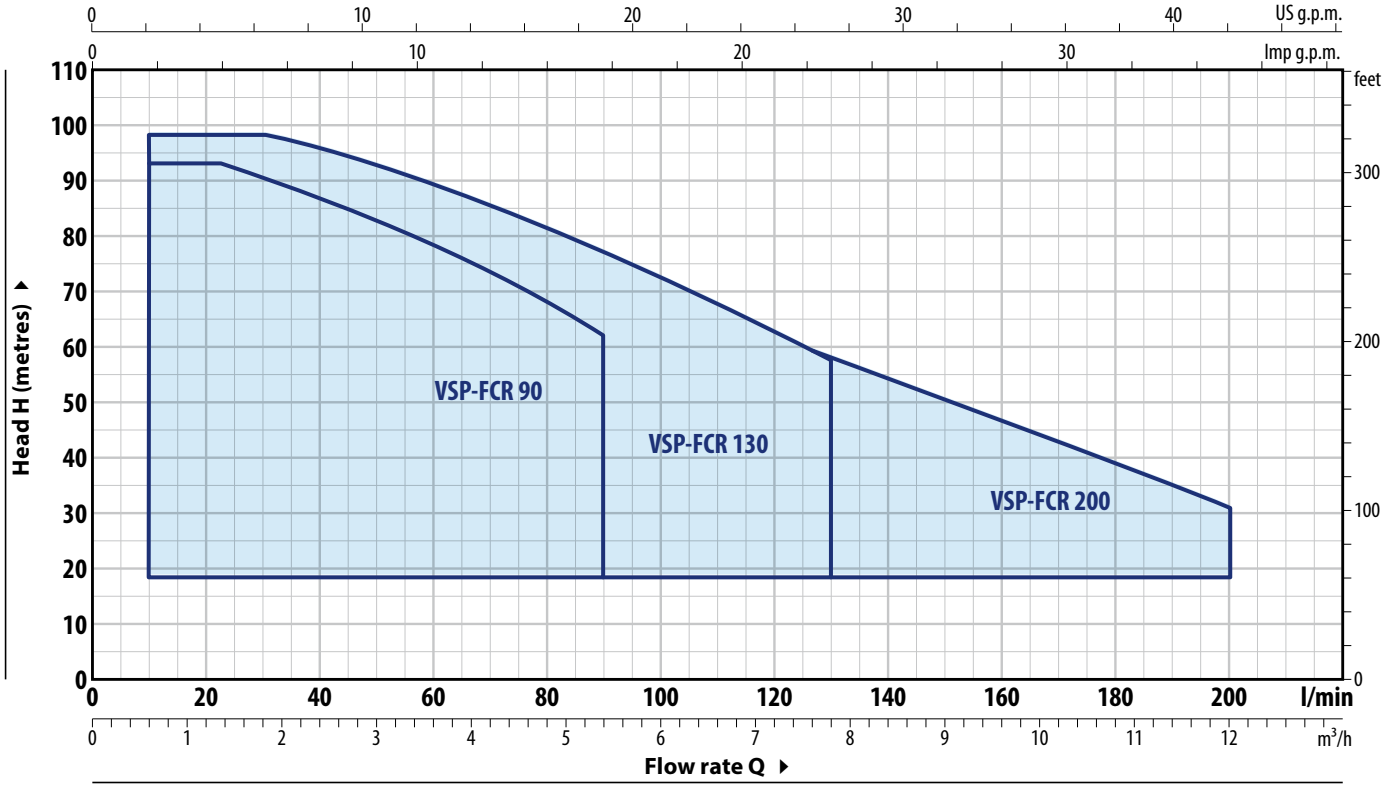

TECHNICAL DATA

TYPE	POWER P2		ABSORPTION 230 V	PERFORMANCE Q	PERFORMANCE H	PERFORMANCE (ADJUSTABLE SET POINT) Set Point Min		Set Point Calibration Std		Set Point Max	
Single-phase	kW	HP		litres/min	metres	bar	l/min	bar	l/min	bar	l/min
VSPm - FCR 75/90	1.5	2	9.8 A	5 – 90	71.5 – 43.5	1.9	5 – 60	**4.0**	**5 – 86**	7.0	5 – 16
VSPm - FCR 80/130	1.5	2	9.8 A	5 – 130	74.5 – 30	2.0	5 – 107	**4.0**	**5 – 107**	7.3	5 – 22
VSPm - FCR 70/200	1.5	2	9.8 A	5 – 200	65.5 – 21	1.8	5 – 180	**4.0**	**5 – 115**	6.4	5 – 36

TYPE	POWER P2		ABSORPTION 400 V	PERFORMANCE Q	PERFORMANCE H	PERFORMANCE (ADJUSTABLE SET POINT) Set Point Min		Set Point Calibration Std		Set Point Max	
Three-phase	kW	HP		litres/min	metres	bar	l/min	bar	l/min	bar	l/min
VSP - FCR 75/90	1.5	2	3.6 A	5 – 90	71.5 – 43.5	1.9	5 – 60	**4.0**	**5 – 86**	7.0	5 – 16
VSP - FCR 100/90	2.2	3	4.9 A	5 – 90	94 – 62.5	2.5	5 – 58	**4.0**	**5 – 71**	9.2	5 – 20
VSP - FCR 80/130	1.5	2	3.6 A	5 – 130	74.5 – 30	2.0	5 – 107	**4.0**	**5 – 107**	7.3	5 – 22
VSP - FCR 105/130	2.2	3	4.9 A	5 – 130	98 – 57.5	2.7	5 – 90	**4.0**	**5 – 107**	9.6	5 – 30
VSP - FCR 70/200	1.5	2	3.6 A	5 – 200	65.5 – 21	1.8	5 – 180	**4.0**	**5 – 115**	6.4	5 – 36
VSP - FCR 95/200	2.2	3	4.9 A	5 – 200	87.5 – 42	2.4	5 – 178	**4.0**	**5 – 175**	8.6	5 – 32

PERFORMANCE CURVES

50 Hz

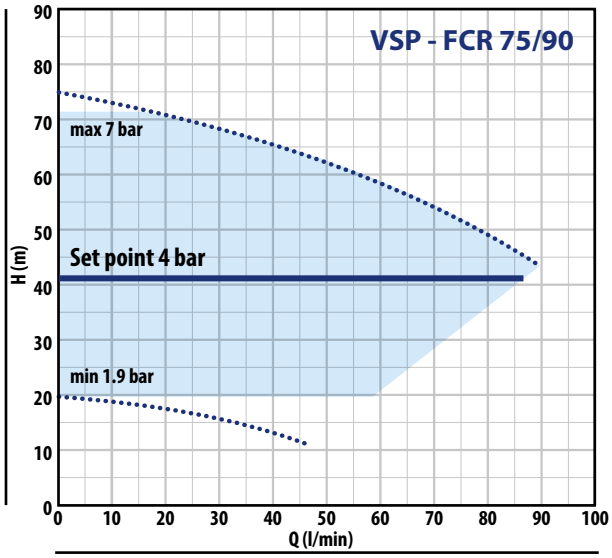

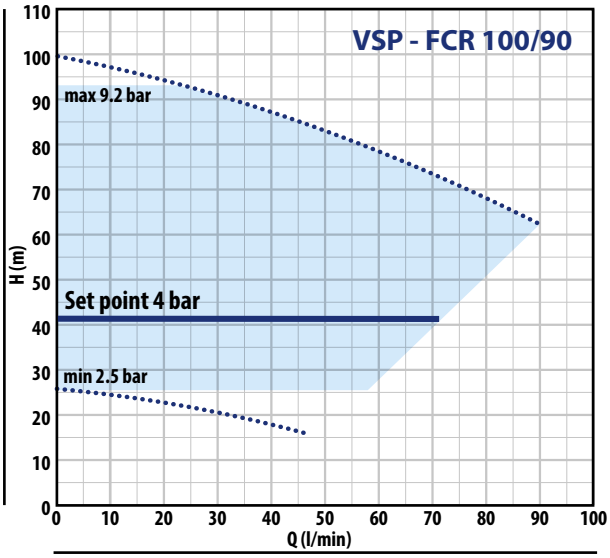

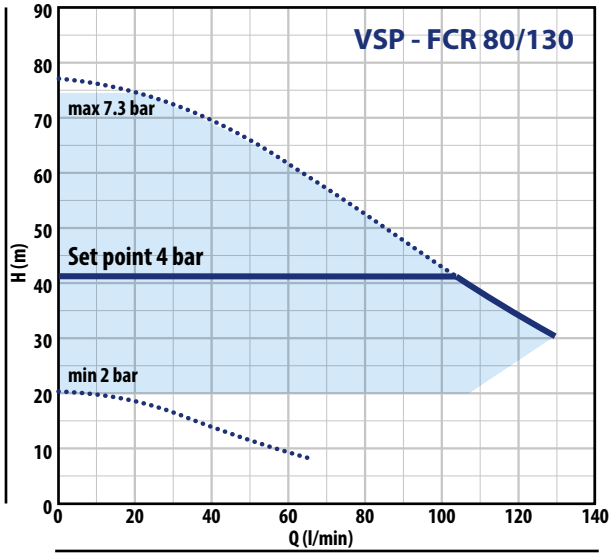

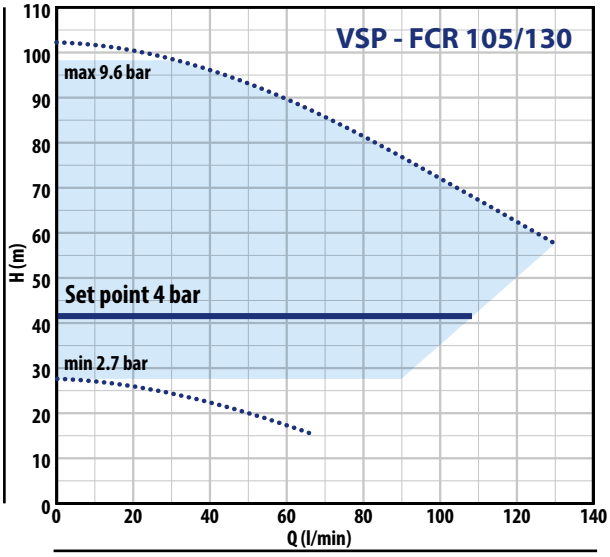

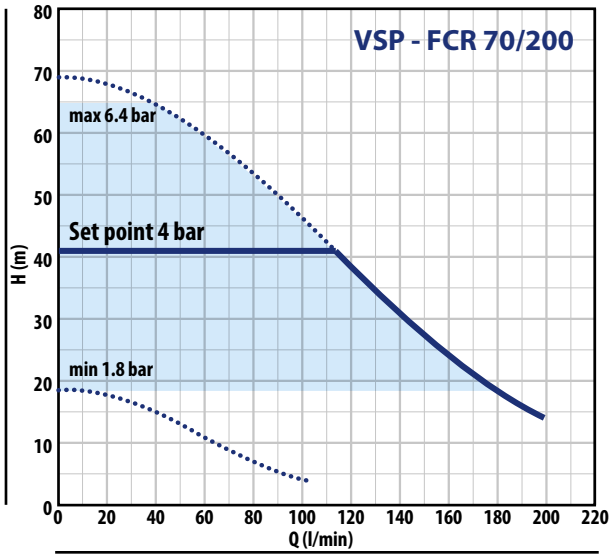

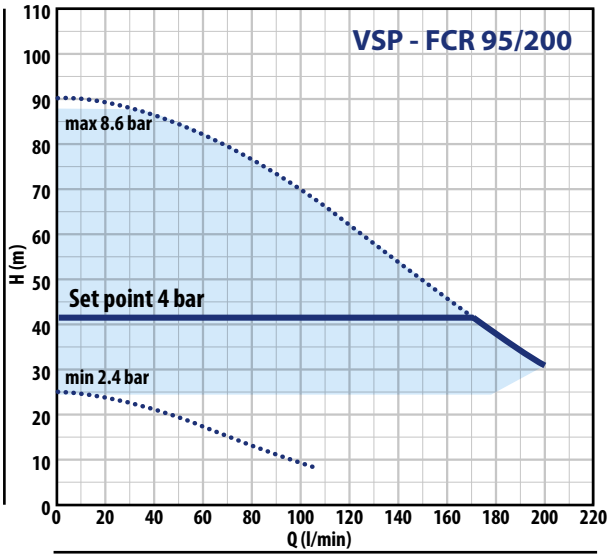

VSP – FCR

DIMENSIONS AND WEIGHT

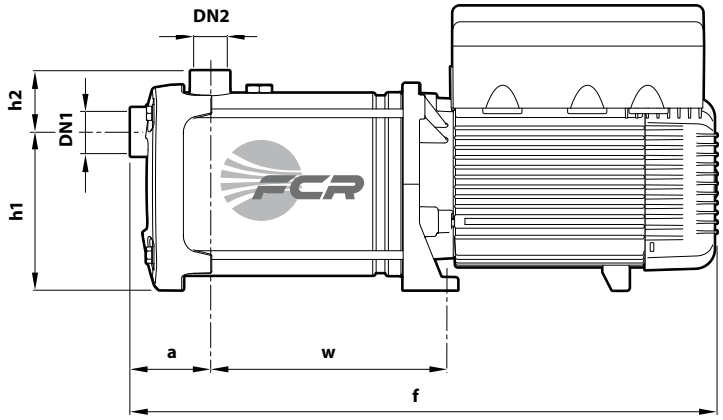

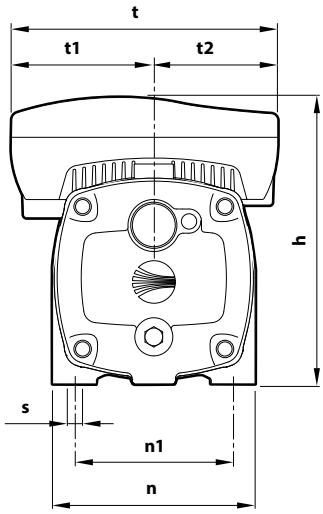

TYPE		PORTS		DIMENSIONS mm												kg	
Single-phase	**Three-phase**	DN1	DN2	f	a	w	h	h1	h2	t	t1	t2	n	n1	s	1~	3~
VSPm - FCR 75/90	**VSP - FCR 75/90**	**1¼"**	**1"**	445	75	139	260	145	59	242	129	113	185	145	11	21.7	21.7
–	**VSP - FCR 100/90**			471		165										–	21.9
VSPm - FCR 80/130	**VSP - FCR 80/130**			445		139										21.9	21.9
–	**VSP - FCR 105/130**			471		165										–	21.9
VSPm - FCR 70/200	**VSP - FCR 70/200**			445		139										24.1	23.9
–	**VSP - FCR 95/200**			471		165										–	24.0

VSP – PLURIJET

PERFORMANCE RANGE

50 Hz

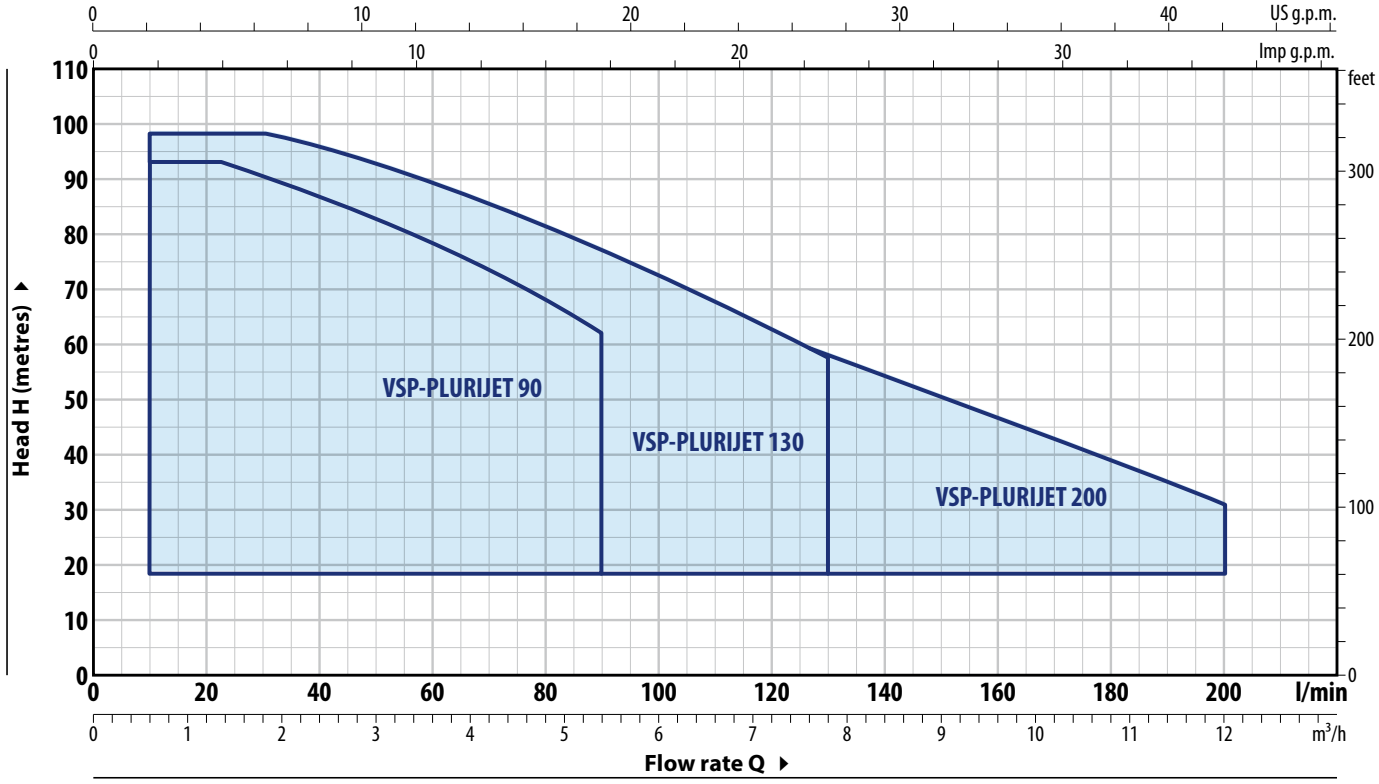

TECHNICAL DATA

TYPE	POWER P2		ABSORPTION 230 V	PERFORMANCE		PERFORMANCE (ADJUSTABLE SET POINT)					
				Q	H	Set Point Min		Set Point Calibration Std		Set Point Max	
Single-phase	**kW**	**HP**		litres/min	metres	bar	l/min	bar	l/min	bar	l/min
VSPm - PLURIJET 75/90	1.5	2	9.8 A	5 – 90	71.5 – 43.5	1.9	5 – 60	**4.0**	**5 – 86**	7.0	5 – 16
VSPm - PLURIJET 80/130	1.5	2	9.8 A	5 – 130	74.5 – 30	2.0	5 – 107	**4.0**	**5 – 107**	7.3	5 – 22
VSPm - PLURIJET 70/200	1.5	2	9.8 A	5 – 200	65.5 – 21	1.8	5 – 180	**4.0**	**5 – 115**	6.4	5 – 36

TYPE	POWER P2		ABSORPTION 400 V	PERFORMANCE		PERFORMANCE (ADJUSTABLE SET POINT)					
				Q	H	Set Point Min		Set Point Calibration Std		Set Point Max	
Three-phase	**kW**	**HP**		litres/min	metres	bar	l/min	bar	l/min	bar	l/min
VSP - PLURIJET 75/90	1.5	2	3.6 A	5 – 90	71.5 – 43.5	1.9	5 – 60	**4.0**	**5 – 86**	7.0	5 – 16
VSP - PLURIJET 100/90	2.2	3	4.9 A	5 – 90	94 – 62.5	2.5	5 – 58	**4.0**	**5 – 71**	9.2	5 – 20
VSP - PLURIJET 80/130	1.5	2	3.6 A	5 – 130	74.5 – 30	2.0	5 – 107	**4.0**	**5 – 107**	7.3	5 – 22
VSP - PLURIJET 105/130	2.2	3	4.9 A	5 – 130	98 – 57.5	2.7	5 – 90	**4.0**	**5 – 107**	9.6	5 – 30
VSP - PLURIJET 70/200	1.5	2	3.6 A	5 – 200	65.5 – 21	1.8	5 – 180	**4.0**	**5 – 115**	6.4	5 – 36
VSP - PLURIJET 95/200	2.2	3	4.9 A	5 – 200	87.5 – 42	2.4	5 – 178	**4.0**	**5 – 175**	8.6	5 – 32

VSP – PLURIJET

PERFORMANCE CURVES

50 Hz

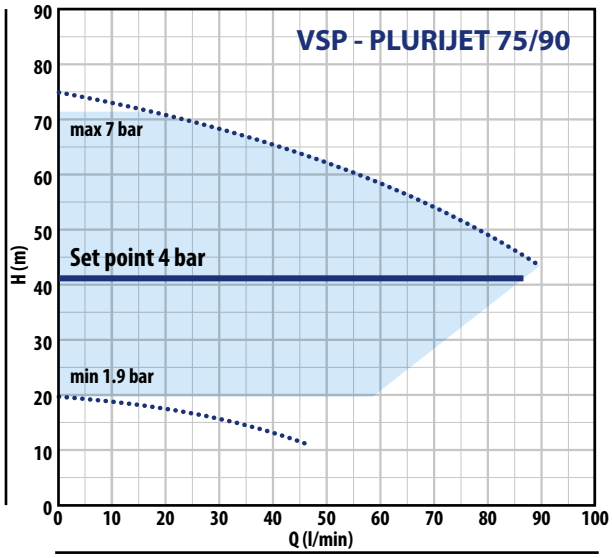

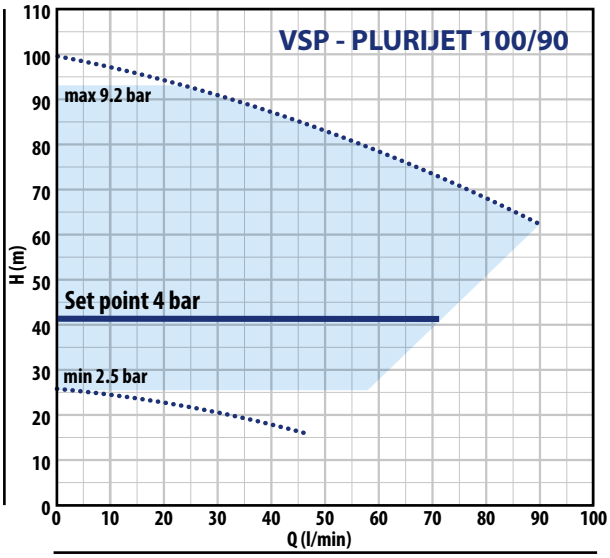

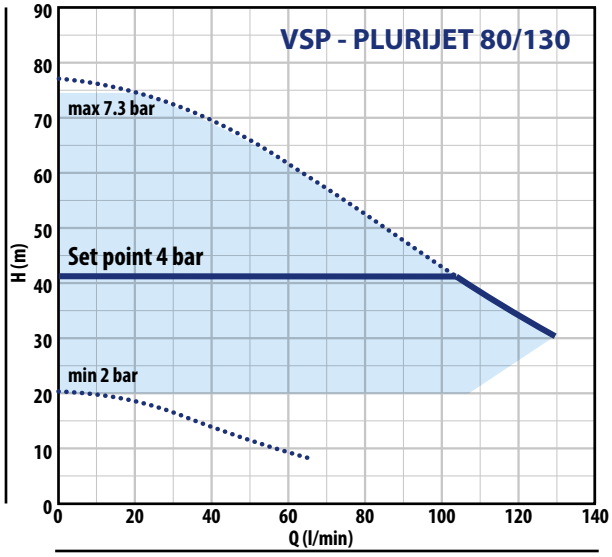

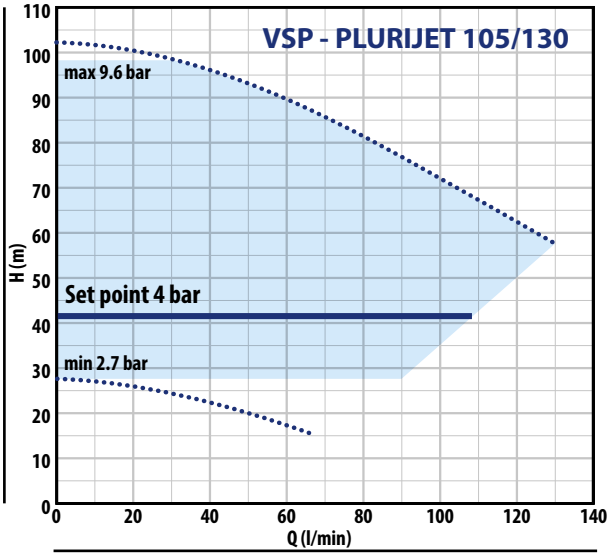

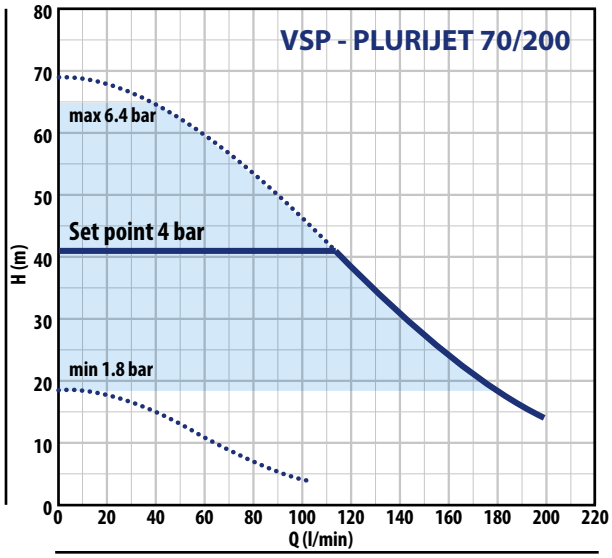

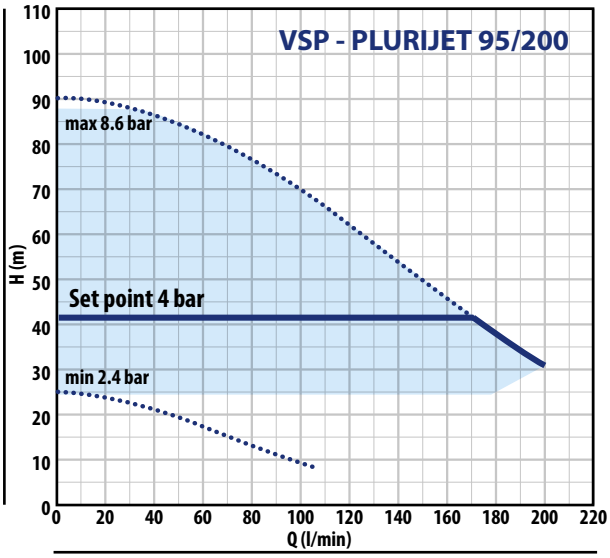

DIMENSIONS AND WEIGHT

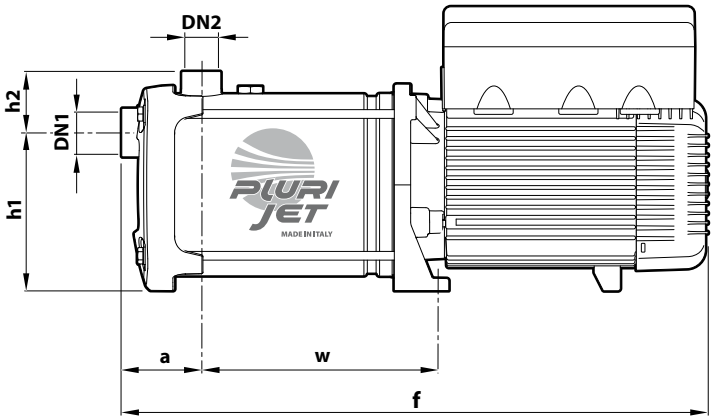

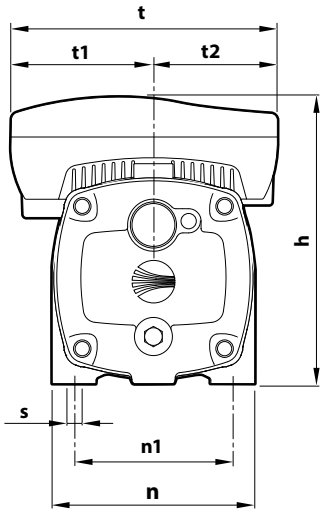

TYPE		PORTS		DIMENSIONS mm												kg	
Single-phase	**Three-phase**	DN1	DN2	f	a	w	h	h1	h2	t	t1	t2	n	n1	s	1~	3~
VSPm - PLURIJET 75/90	**VSP - PLURIJET 75/90**	**1¼"**	**1"**	497	75	191	260	145	59	242	129	113	185	145	11	21.7	21.7
–	**VSP - PLURIJET 100/90**			523		217										–	23.9
VSPm - PLURIJET 80/130	**VSP - PLURIJET 80/130**			497		191										21.9	21.9
–	**VSP - PLURIJET 105/130**			523		217										–	24.1
VSPm - PLURIJET 70/200	**VSP - PLURIJET 70/200**			497		191										21.9	21.9
–	**VSP - PLURIJET 95/200**			523		217										–	24.0

VSP – MK

PERFORMANCE RANGE

50 Hz

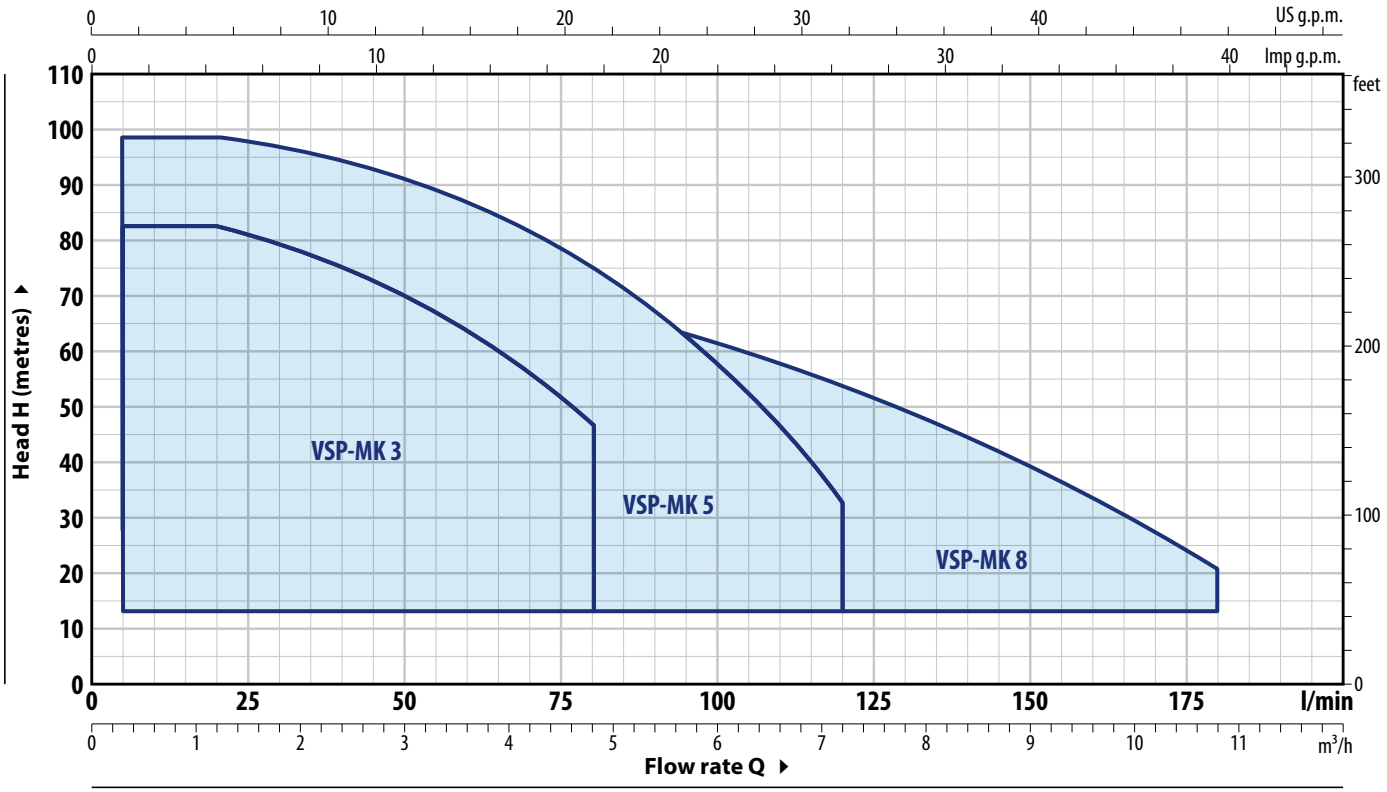

TECHNICAL DATA

TYPE	POWER P2		ABSORPTION 230 V	PERFORMANCE Q	PERFORMANCE H	PERFORMANCE (ADJUSTABLE SET POINT) Set Point Min		Set Point Calibration Std		Set Point Max	
Single-phase	**kW**	**HP**		litres/min	metres	bar	l/min	bar	l/min	bar	l/min
VSPm - MK 3/3	0.75	1	6.2 A	10 – 80	52 – 29	1.4	5 – 52	**4.0**	5 – **52**	5.0	5 – 14
VSPm - MK 3/5	1.1	1.5	7.8 A	10 – 80	85 – 48	2.3	5 – 52	**4.0**	5 – **72**	8.3	5 – 13
VSPm - MK 3/6	1.5	2	9.0 A	10 – 80	101 – 56	2.7	5 – 53	**4.0**	5 – **65**	9.7	5 – 19
VSPm - MK 5/4	0.75	1	6.4 A	20 – 120	55 – 20	1.5	5 – 101	**4.0**	5 – **82**	5.3	5 – 26
VSPm - MK 5/5	1.1	1.5	6.5 A	20 – 120	69 – 21.5	1.8	5 – 108	**4.0**	5 – **99**	6.7	5 – 13
VSPm - MK 5/7	1.5	2	9.0 A	20 – 120	95 – 30	2.6	5 – 109	**4.0**	5 – **111**	9.3	5 – 16
VSPm - MK 8/4	1.1	1.5	8.3 A	40 – 180	53 – 12	1.4	5 – 175	**4.0**	5 – **115**	5.2	5 – 30
VSPm - MK 8/5	1.5	2	10.0 A	40 – 180	68 – 15.5	1.8	5 – 175	**4.0**	5 - **138**	6.6	5 – 45

TYPE	POWER P2		ABSORPTION 400 V	PERFORMANCE Q	PERFORMANCE H	PERFORMANCE (ADJUSTABLE SET POINT) Set Point Min		Set Point Calibration Std		Set Point Max	
Three-phase	**kW**	**HP**		litres/min	metres	bar	l/min	bar	l/min	bar	l/min
VSP - MK 3/3	0.75	1	1.7 A	10 – 80	52 – 29	1.4	5 – 52	**4.0**	5 – **52**	5.0	5 – 14
VSP - MK 3/5	1.1	1.5	2.3 A	10 – 80	85 – 48	2.3	5 – 52	**4.0**	5 – **72**	8.3	5 – 13
VSP - MK 3/6	1.5	2	2.8 A	10 – 80	101 – 56	2.7	5 – 53	**4.0**	5 – **65**	9.7	5 – 19
VSP - MK 5/4	0.75	1	2.0 A	20 – 120	55 – 20	1.5	5 – 101	**4.0**	5 – **82**	5.3	5 – 26
VSP - MK 5/5	1.1	1.5	2.2 A	20 – 120	69 – 21.5	1.8	5 – 108	**4.0**	5 – **99**	6.7	5 – 13
VSP - MK 5/7	1.5	2	3.0 A	20 – 120	95 – 30	2.6	5 – 109	**4.0**	5 – **111**	9.3	5 – 16
VSP - MK 5/8	2.2	3	3.5 A	20 – 120	108 – 34	2.9	5 – 109	**4.0**	5 – **115**	10.6	5 – 14
VSP - MK 8/4	1.1	1.5	2.8 A	40 – 180	53 – 12	1.4	5 – 175	**4.0**	5 – **115**	5.2	5 – 30
VSP - MK 8/5	1.5	2	3.4 A	40 – 180	68 – 15.5	1.8	5 – 175	**4.0**	5 - **138**	6.6	5 – 45
VSP - MK 8/6	2.2	3	3.8 A	40 – 180	81 – 18.5	2.2	5 – 175	**4.0**	5 – **149**	8.0	5 – 22

PERFORMANCE CURVES

50 Hz

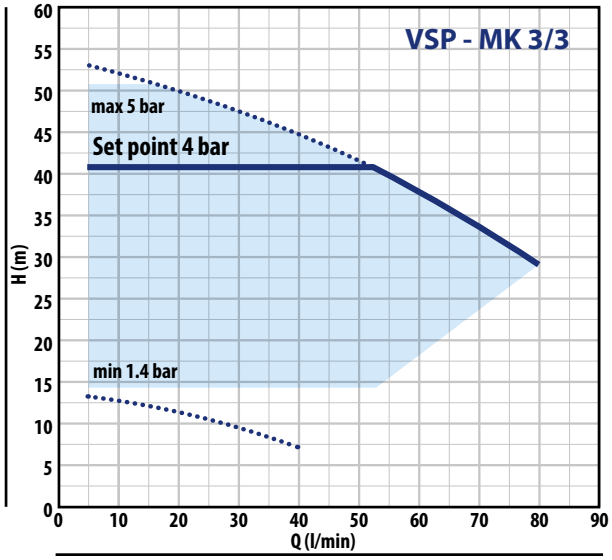

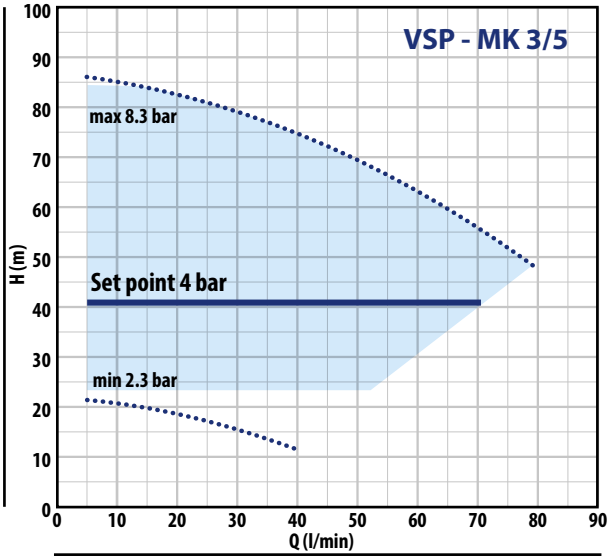

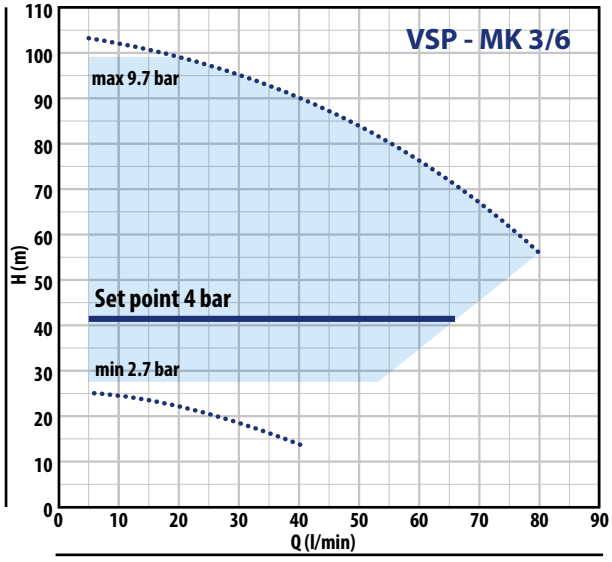

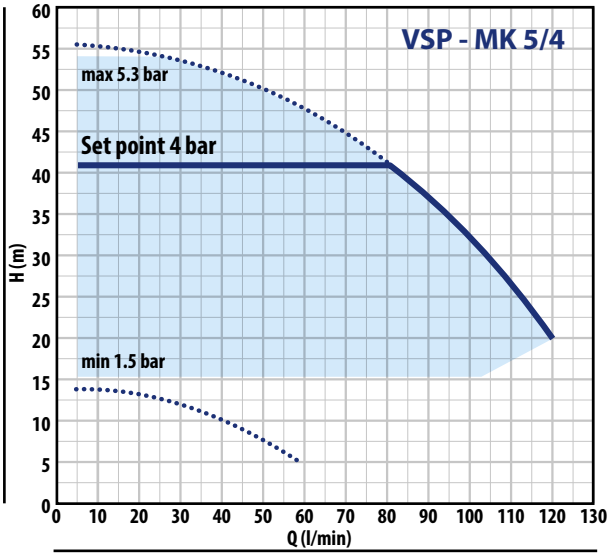

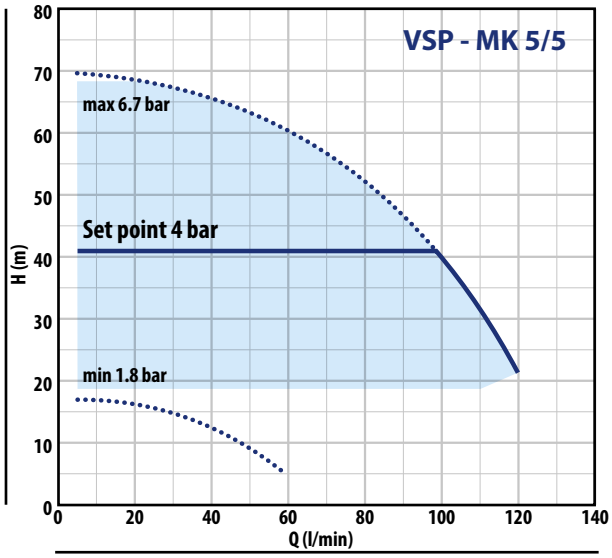

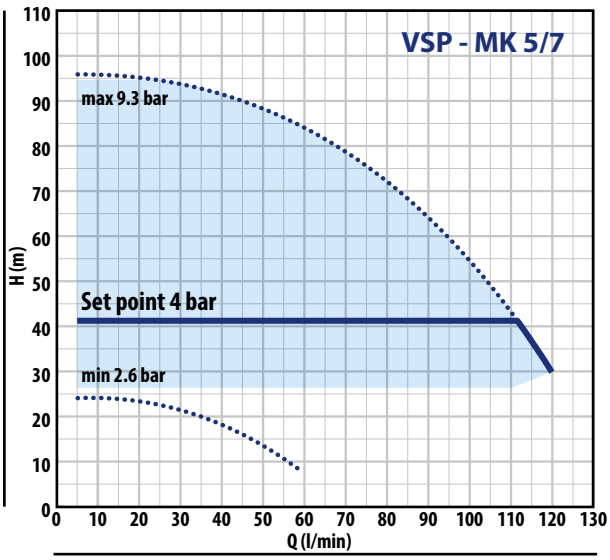

VSP – MK

PERFORMANCE CURVES

50 Hz

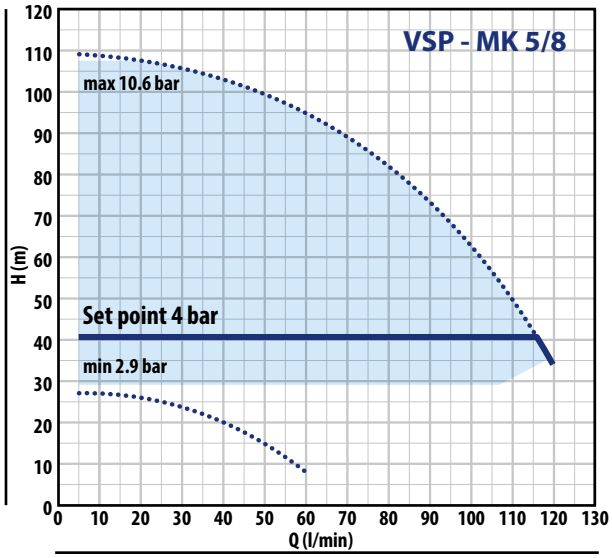

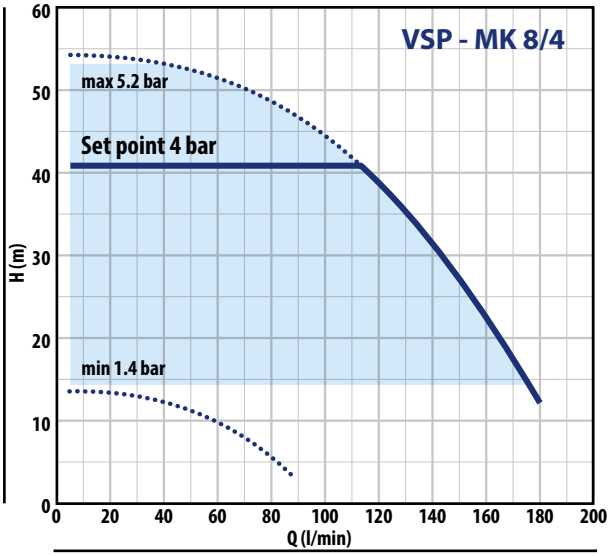

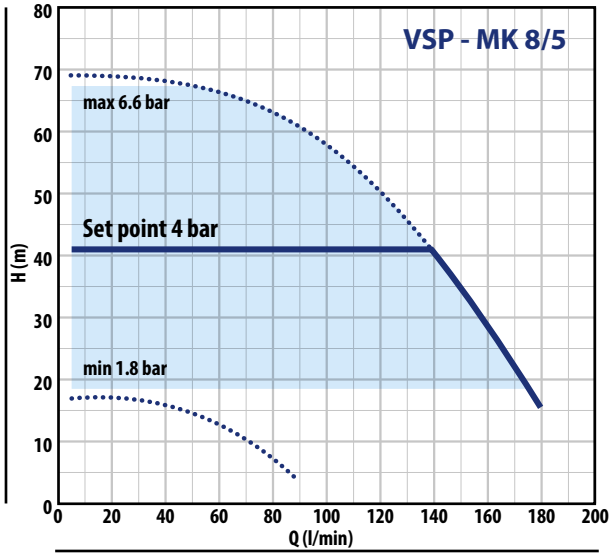

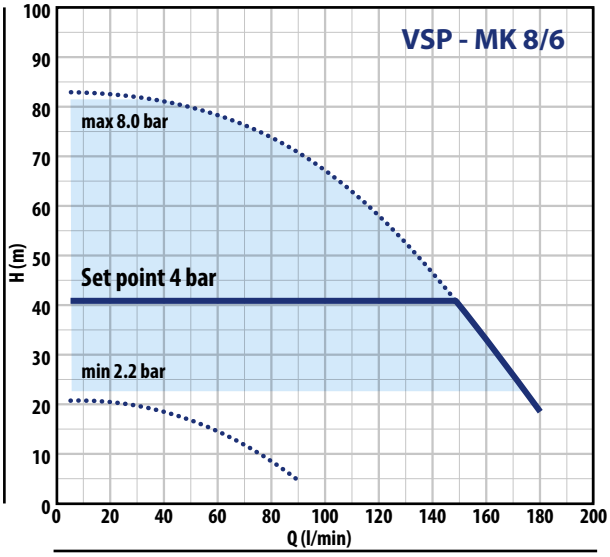

DIMENSIONS AND WEIGHT

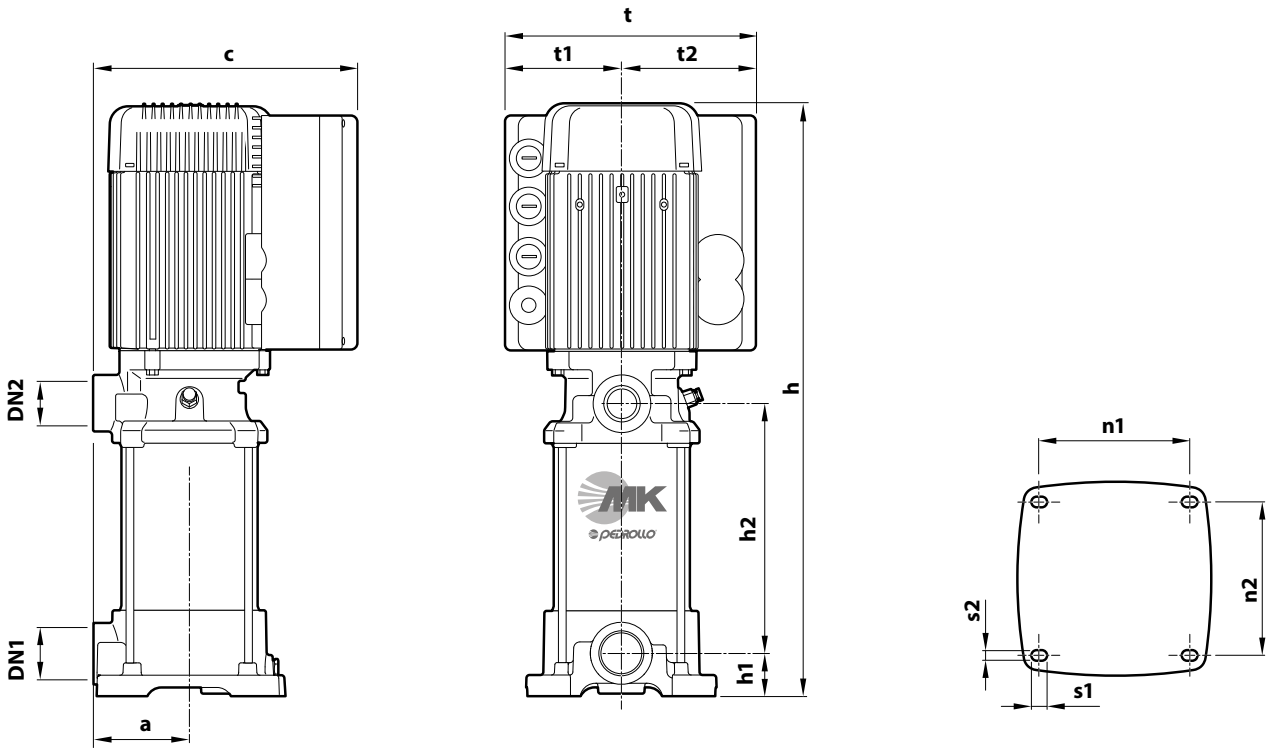

TYPE		PORTS		DIMENSIONS mm												kg	
Single-phase	**Three-phase**	DN1	DN2	a	c	h	h1	h2	t	t1	t2	n1	n2	S1	s2	1~	3~
VSPm - MK 3/3	**VSP - MK 3/3**					447		132								23.3	23.3
VSPm - MK 3/5	**VSP - MK 3/5**					501		186								25.5	25.5
VSPm - MK 3/6	**VSP - MK 3/6**					528		213								27.3	27.3
VSPm - MK 5/4	**VSP - MK 5/4**					474		159								23.8	23.8
VSPm - MK 5/5	**VSP - MK 5/5**					501		186								25.2	25.2
VSPm - MK 5/7	**VSP - MK 5/7**	**1¼"**	**1"**	93	255	555	41	240	242	113	129	143	146	14.5	10	28.3	28.3
–	**VSP - MK 5/8**					602		267								–	28.6
VSPm - MK 8/4	**VSP - MK 8/4**					474		159								26.6	26.6
VSPm - MK 8/5	**VSP - MK 8/5**					501		186								27.0	27.0
–	**VSP - MK 8/6**					548		213								–	29.4

VSP – HT-PRO

PERFORMANCE RANGE

50 Hz

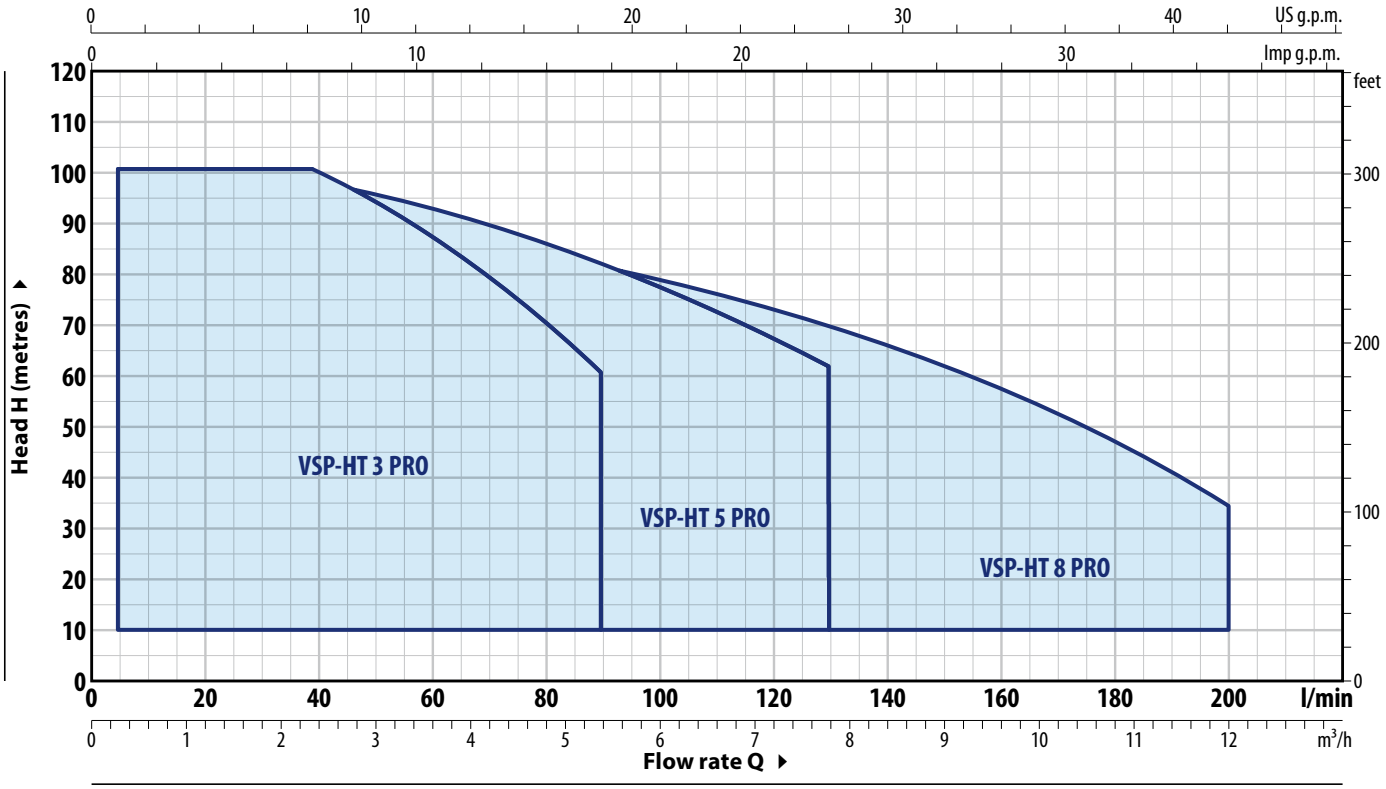

TECHNICAL DATA

TYPE	POWER P2		ABSORPTION 230 V	PERFORMANCE Q	PERFORMANCE H	PERFORMANCE (ADJUSTABLE SET POINT) Set Point Min		Set Point Calibration Std		Set Point Max	
Single-phase	kW	HP		litres/min	metres	bar	l/min	bar	l/min	bar	l/min
VSPm - HT 3/4 PRO	0.75	1	7.5 A	5 – 90	65 – 35	1.6	5 – 59	**4.0**	5 – **73**	5.9	5 – 19
VSPm - HT 3/5 PRO	1.1	1.5	9.0 A	5 – 90	80 – 44	2.0	5 – 62	**4.0**	5 – **86**	7.4	5 – 22
VSPm - HT 3/6 PRO	1.5	2	10.5 A	5 – 90	96 – 52	2.4	5 – 62	**4.0**	5 – **84**	8.8	5 – 20
VSPm - HT 5/2 PRO	0.75	1	7.0 A	5 – 130	35 – 20.5	0.8	5 – 83	**2.0**	5 – **114**	3.1	5 – 22
VSPm - HT 5/3 PRO	1.1	1.5	8.0 A	5 – 130	51.5 – 31	1.3	5 – 91	**4.0**	5 – **71**	4.8	5 – 14
VSPm - HT 5/4 PRO	1.5	2	9.5 A	5 – 130	68.5 – 41	1.7	5 – 90	**4.0**	5 – **108**	6.1	5 – 26
VSPm - HT 8/3 PRO	1.1	1.5	8.5 A	20 – 200	46.5 – 17	1.1	5 – 182	**4.0**	5 – **58**	4.1	5 – 28
VSPm - HT 8/4 PRO	1.5	2	10.0 A	20 – 200	62 – 23	1.5	5 – 180	**4.0**	5 – **128**	5.4	5 – 48

TYPE	POWER P2		ABSORPTION 400 V	PERFORMANCE Q	PERFORMANCE H	PERFORMANCE (ADJUSTABLE SET POINT) Set Point Min		Set Point Calibration Std		Set Point Max	
Three-phase	kW	HP		litres/min	metres	bar	l/min	bar	l/min	bar	l/min
VSP - HT 3/4 PRO	0.75	1	2.5 A	5 – 90	65 – 35	1.6	5 – 59	**4.0**	5 – **73**	5.9	5 – 19
VSP - HT 3/5 PRO	1.1	1.5	3.0 A	5 – 90	80 – 44	2.0	5 – 62	**4.0**	5 – **86**	7.4	5 – 22
VSP - HT 3/6 PRO	1.5	2	3.5 A	5 – 90	96 – 52	2.4	5 – 62	**4.0**	5 – **84**	8.8	5 – 20
VSP - HT 3/7 PRO	1.8	2.5	4.2 A	5 – 90	112 – 61	2.8	5 – 62	**4.0**	5 – **76**	10.2	5 – 25
VSP - HT 5/2 PRO	0.75	1	2.3 A	5 – 130	35 – 20.5	0.8	5 – 83	**2.0**	5 – **114**	3.1	5 – 22
VSP - HT 5/3 PRO	1.1	1.5	2.4 A	5 – 130	51.5 – 31	1.3	5 – 91	**4.0**	5 – **71**	4.8	5 – 14
VSP - HT 5/4 PRO	1.5	2	3.2 A	5 – 130	68.5 – 41	1.7	5 – 90	**4.0**	5 – **108**	6.1	5 – 26
VSP - HT 5/5 PRO	1.8	2.5	4.0 A	5 – 130	85 – 51.5	2.1	5 – 91	**4.0**	5 – **128**	7.5	5 – 42
VSP - HT 5/6 PRO	2.2	3	4.3 A	5 – 130	103 – 62	2.6	5 – 92	**4.0**	5 – **118**	9.3	5 – 25
VSP - HT 8/3 PRO	1.1	1.5	3.0 A	20 – 200	46.5 – 17	1.1	5 – 182	**4.0**	5 – **58**	4.1	5 – 28
VSP - HT 8/4 PRO	1.5	2	3.4 A	20 – 200	62 – 23	1.5	5 – 180	**4.0**	5 – **128**	5.4	5 – 48
VSP - HT 8/5 PRO	1.8	2.5	4.0 A	20 – 200	77.5 – 28.5	1.8	5 – 181	**4.0**	5 – **156**	6.7	5 – 44
VSP - HT 8/6 PRO	2.2	3	4.5 A	20 – 200	93 – 34.5	2.3	5 – 186	**4.0**	5 – **179**	8.2	5 – 32

PERFORMANCE CURVES

50 Hz

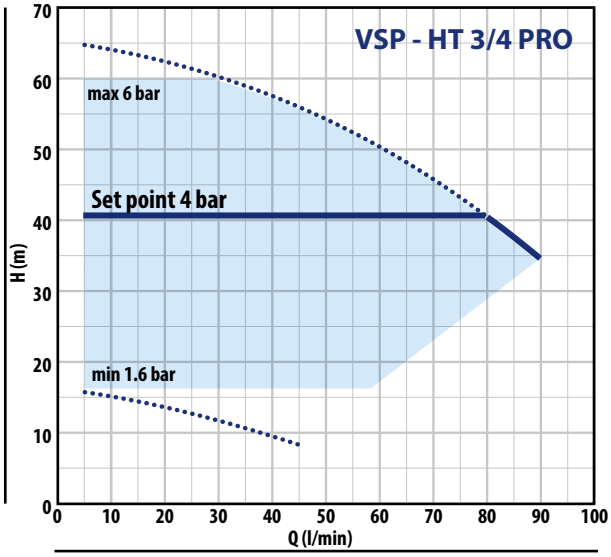

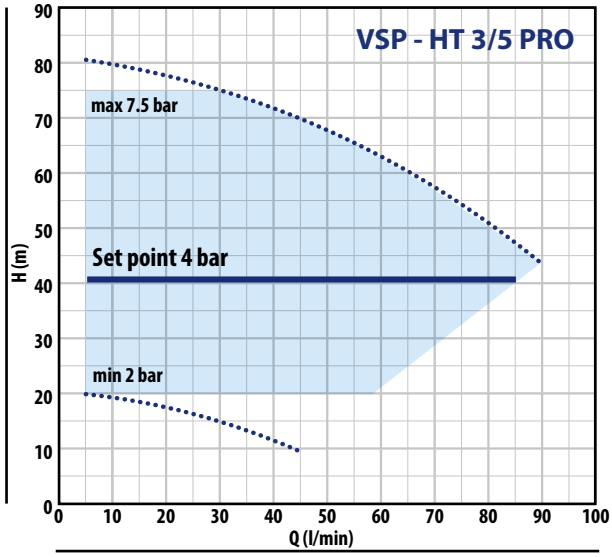

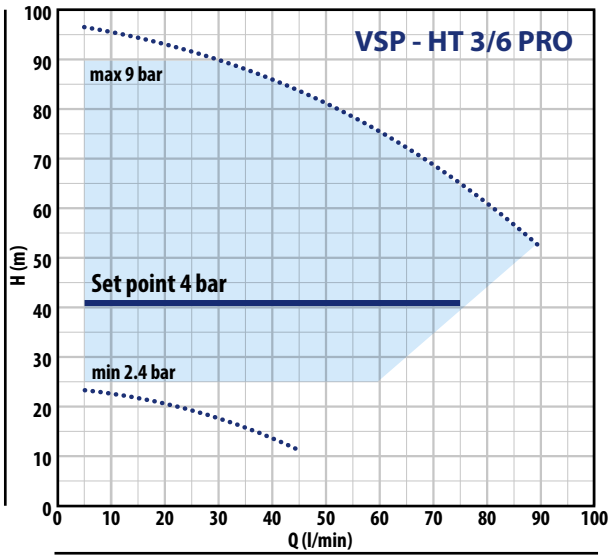

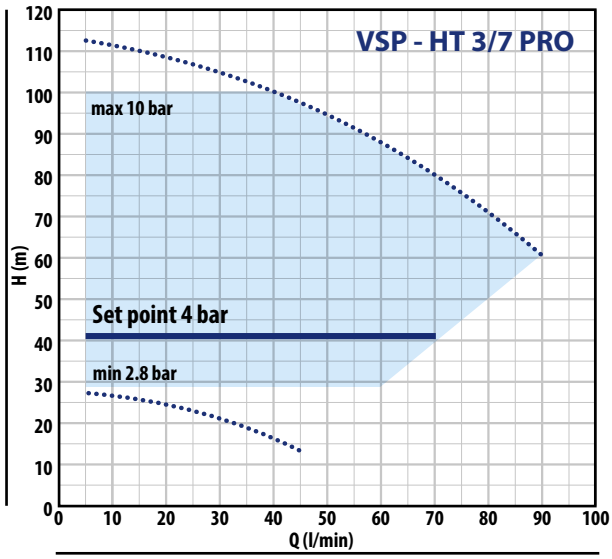

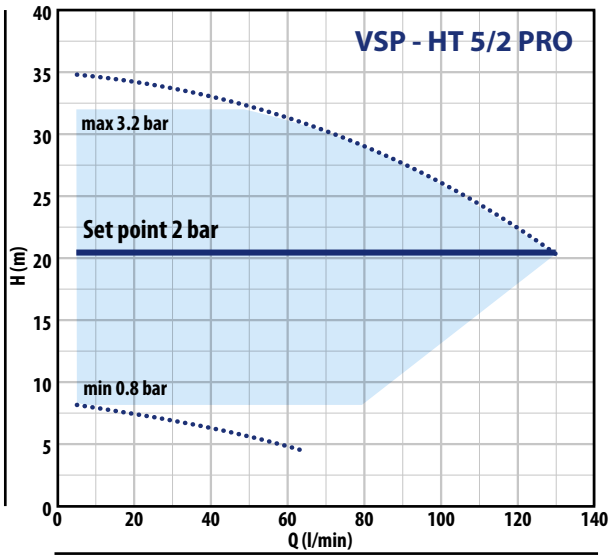

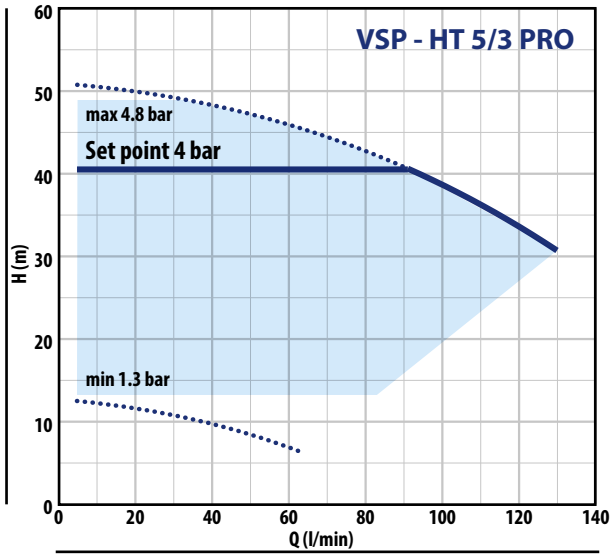

VSP – HT-PRO

PERFORMANCE CURVES

50 Hz

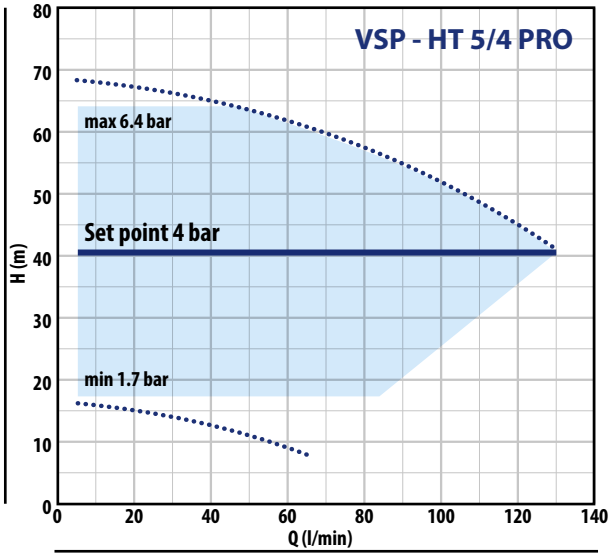

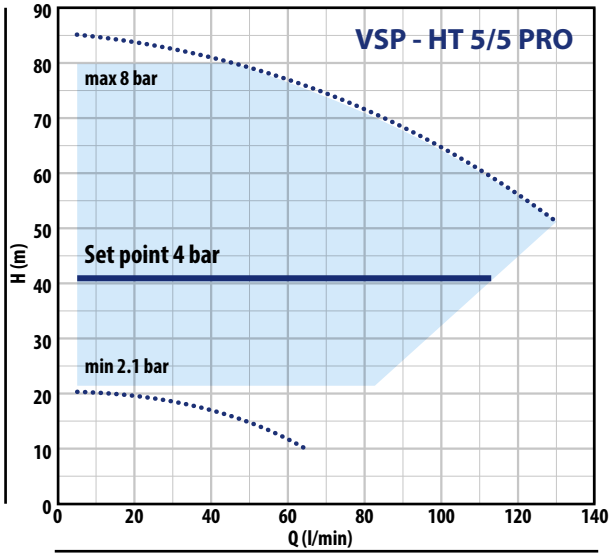

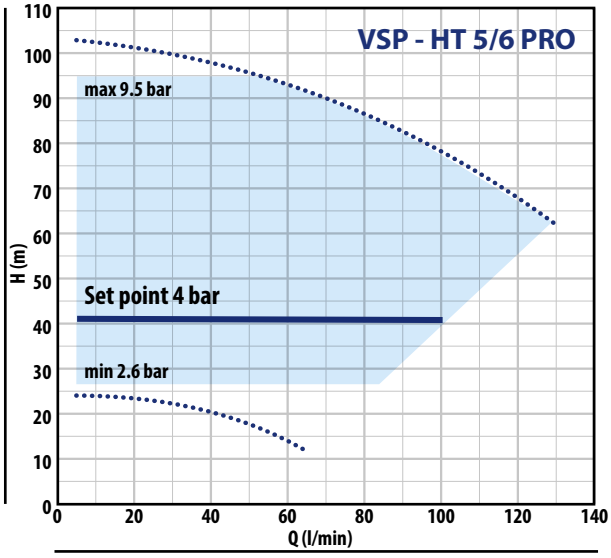

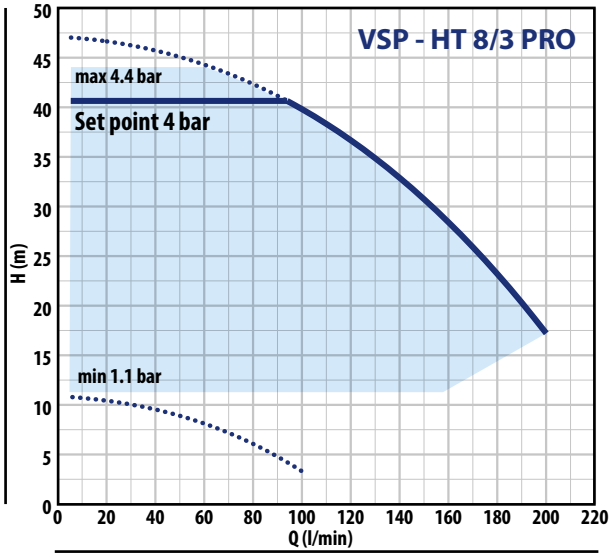

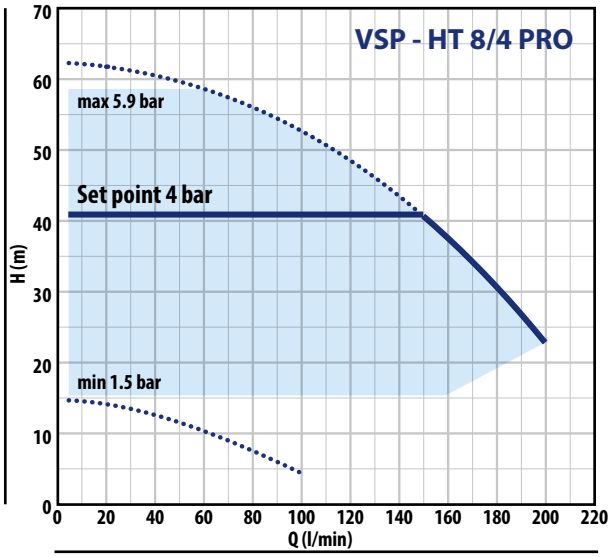

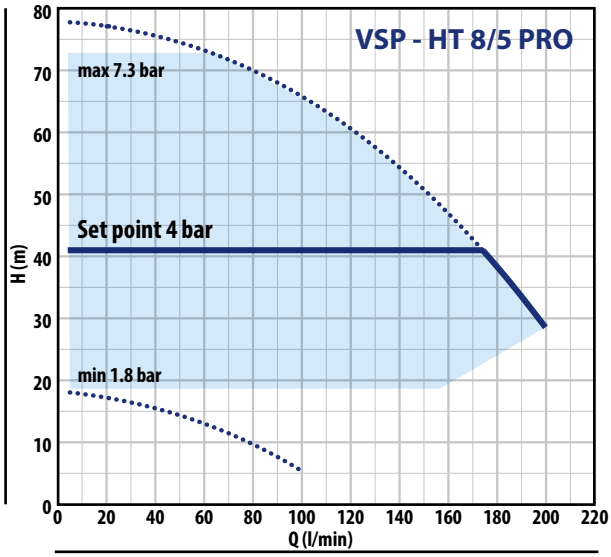

PERFORMANCE CURVES

50 Hz

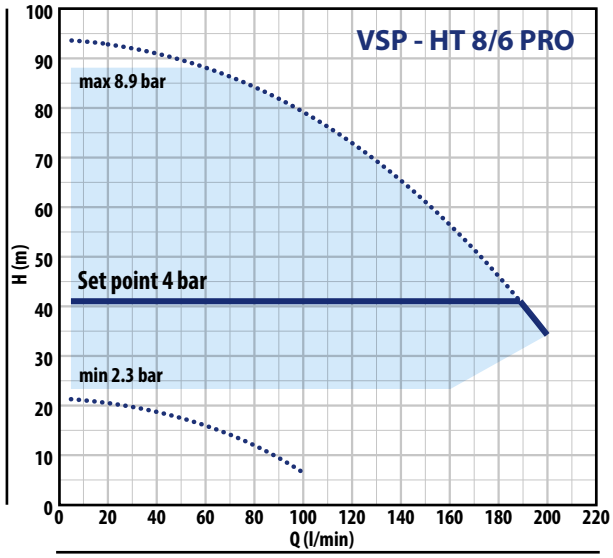

DIMENSIONS AND WEIGHT

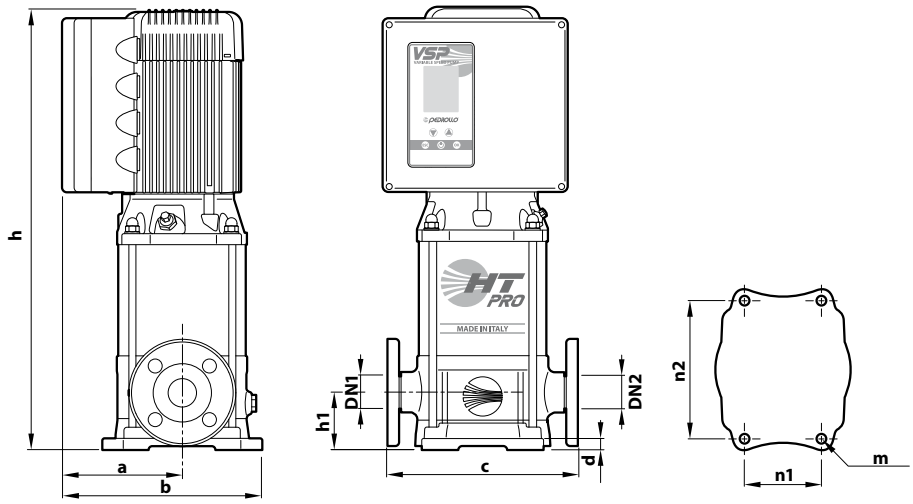

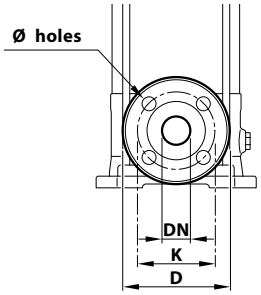

TYPE VSP	DN mm	D mm	K mm	Ø mm
HT 3	**25**	115	85	14
HT 5	**32**	140	100	18
HT 8	**40**	150	110	

TYPE		PORTS		DIMENSIONS mm									kg	
Single-phase	**Three-phase**	DN1	DN2	a	b	c	d	h	h1	n1	n2	m	**1~**	**3~**
VSPm - HT 3/4 PRO	**VSP - HT 3/4 PRO**	**1"**	**1"**	164	269	212	15	509	75	100	180	Ø 13	35.3	34.8
VSPm - HT 3/5 PRO	**VSP - HT 3/5 PRO**							535					35.5	35.0
VSPm - HT 3/6 PRO	**VSP - HT 3/6 PRO**							561					36.2	37.1
–	**VSP - HT 3/7 PRO**							607					–	41.2
VSPm - HT 5/2 PRO	**VSP - HT 5/2 PRO**	**1¼"**	**1¼"**					457					33.2	33.2
VSPm - HT 5/3 PRO	**VSP - HT 5/3 PRO**							483					33.4	33.4
VSPm - HT 5/4 PRO	**VSP - HT 5/4 PRO**							509					35.3	35.4
–	**VSP - HT 5/5 PRO**							555					–	39.1
–	**VSP - HT 5/6 PRO**							581					–	40.1
VSPm - HT 8/3 PRO	**VSP - HT 8/3 PRO**	**1½"**	**1½"**			240		488	80				33.9	33.9
VSPm - HT 8/4 PRO	**VSP - HT 8/4 PRO**							514					35.8	35.9
–	**VSP - HT 8/5 PRO**							560					–	39.4
–	**VSP - HT 8/6 PRO**							586					–	40.2

VSP2 Variable speed pressure units

Clean water

Domestic use

Civil use

INSTALLATION AND USE

VSP2 is a pre-assembled system intended for connecting to water mains or a primary collection tank. It provides water supply and pressurization and is ideal for residential, commercial, and public buildings. It's also suitable for hotels, park irrigation, as well as industrial water handling and treatment.

VSP2 is compatible with clean water and aqueous solutions that do not chemically or mechanically harm the materials used and are free from abrasive or fibrous substances.

PRODUCT DESCRIPTION

VSP2 is a pressurization system comprising two pumping units connected in parallel. Integrated inverter devices automatically adjust their operation to varying water demands while ensuring constant pressure.

When system pressure drops due to water withdrawal, the first **VSP** unit starts working to provide the necessary water flow rate, maintaining pressure. Once the maximum rotation speed is reached, the second **VSP** unit starts to fulfill the system's water demand.

COMPONENTS

※ **TWO VSP PUMPING UNITS** connected in parallel via suction and discharge manifolds. Each unit is equipped with ball valves on the supply and suction side, non-return valves on the suction side (FCR, PLURIJET, MK) or on the supply side (HT-PRO). The electronics integrated in VSP can manage the alternating operation of individual units.

VSP2 is designed to protect the system from:

※ dry running
※ overvoltage and undervoltage
※ combustion chamber

※ **BASE** made of metal profile and equipped with adjustable vibration-damping feet.

※ **PRESSURE TRANSDUCER** (4-20mA) installed on the supply manifold, which enables command and control of the pressurization unit.

※ **CONTROL PANEL** with thermal-magnetic circuit breakers for three-phase versions and thermal-magnetic circuit breakers for single-phase versions.

VSP2 – FCR

Pressurization units comprise two multistage centrifugal pumps with an integrated inverter in the motor, capable of maintaining constant pressure in the system. They are used for water supply in residential, commercial, and public buildings, as well as for garden irrigation and general clean water movement.

TECHNICAL DATA

- Liquid temperature between **-10 °C** and **+60 °C**
- Ambient temperature between **-5 °C** and **+40 °C**
- Max. pressure in the pump body **10 bar**
- Continuous running duty **S1**

VSP2 – PLURIJET

Pressurization units comprise two self-priming multistage centrifugal pumps with an integrated inverter in the motor, capable of maintaining a constant pressure in the system. They are utilized for water supply, including from underground reservoirs, in residential, commercial, and public buildings, as well as for garden irrigation and general clean water movement.

TECHNICAL DATA

- Liquid temperature between **-10 °C** and **+40 °C**
- Ambient temperature between **-5 °C** and **+40 °C**
- Max. pressure in the pump body **10 bar**
- Continuous running duty **S1**

VSP2 – MK

Pressurization units comprise two vertical multistage pumps with an integrated inverter in the motor, capable of maintaining a constant pressure in the system. They are used for water supply in residential, commercial, and public buildings, as well as for handling clean water.

TECHNICAL DATA

- Liquid temperature between **-10 °C** and **+60 °C**
- Ambient temperature between **-5 °C** and **+40 °C**
- Max. pressure in pump body **11 bar**
- Continuous running duty **S1**

VSP2 - HT PRO

Pressurization units comprise two vertical multistage pumps with integrated inverters in the motor to maintain consistent pressure in the system. They're commonly used for water supply in commercial and public buildings, irrigation in parks and athletic fields, and for industrial water treatment.

TECHNICAL DATA

- Liquid temperature between **-10 °C** and **+60 °C**
- Ambient temperature between **-5 °C** and **+40 °C**
- Max. pressure in pump body **11 bar**
- Continuous running duty **S1**

VSP2 – FCR

FIELD AND PERFORMANCE DATA

50 Hz

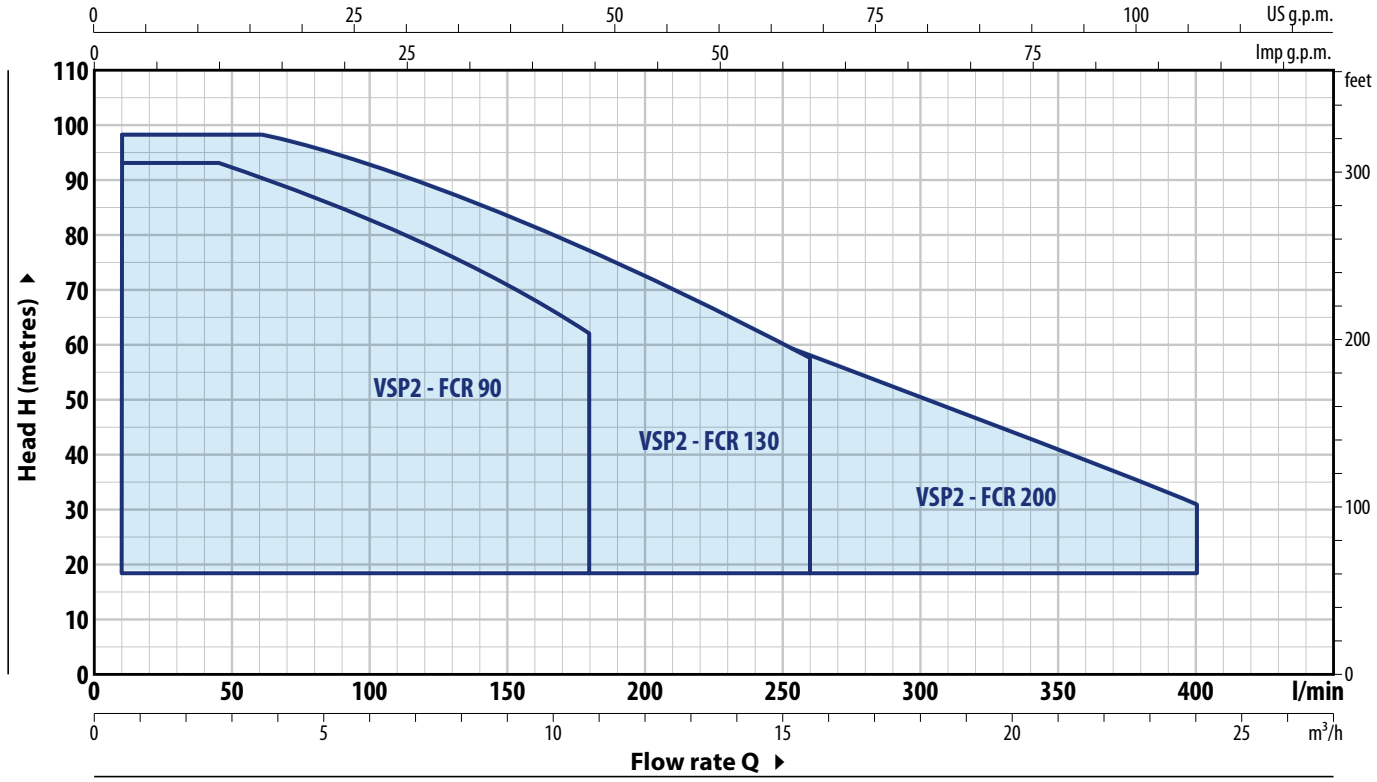

TYPE Single-phase	POWER P2 kW	POWER P2 HP	Q															
				m³/h	0	0.6	1.2	2.4	4.8	6	7.2	9.6	10.8	12	14.4	15.6	18	20.4	24
				l/min	**0**	**10**	**20**	**40**	**80**	**100**	**120**	**160**	**180**	**200**	**240**	**260**	**300**	**340**	**400**
VSP2m - FCR 75/90	2x1.5	2x2			71.5	71.5	71.5	71	66	63	59.5	49.5	43.5						
VSP2m - FCR 80/130	2x1.5	2x2	**H**	metres	74.5	74.5	74.5	74.5	69.5	66	62	52.5	48	43	34	30			
VSP2m - FCR 70/200	2x1.5	2x2			65.5	65.5	65.5	65.5	65	62.5	60	53.5	50	46	38.5	35	27.5	21	14

TYPE Three-phase	POWER P2 kW	POWER P2 HP	Q															
				m³/h	0	0.6	1.2	2.4	4.8	6	7.2	9.6	10.8	12	14.4	15.6	18	20.4	24
				l/min	**0**	**10**	**20**	**40**	**80**	**100**	**120**	**160**	**180**	**200**	**240**	**260**	**300**	**340**	**400**
VSP2 - FCR 75/90	2x1.5	2x2			71.5	71.5	71.5	71	66	63	59.5	49.5	43.5						
VSP2 - FCR 100/90	2x2.2	2x3			94	94	94	94	87.5	83	78.5	68	62.5						
VSP2 - FCR 80/130	2x1.5	2x2			74.5	74.5	74.5	74.5	69.5	66	62	52.5	48	43	34	30			
VSP2 - FCR 105/130	2x2.2	2x3	**H**	metres	98	98	98	98	96	93	89.5	81	76.5	72	62	57.5			
VSP2 - FCR 70/200	2x1.5	2x2			65.5	65.5	65.5	65.5	65	62.5	60	53.5	50	46	38.5	35	27.5	21	14
VSP2 - FCR 95/200	2x2.2	2x3			87.5	87.5	87.5	87.5	87	85	82.5	76.5	73.5	70	62.5	58.5	50.5	42	31

Q = Flow rate **H** = Total manometric head

Performance curves comply with EN ISO 9906 Grade 3B tolerance limits.

※ **The data shown in the diagram and tables indicate performance with 2 pumps in operation**

PERFORMANCE CURVES

50 Hz

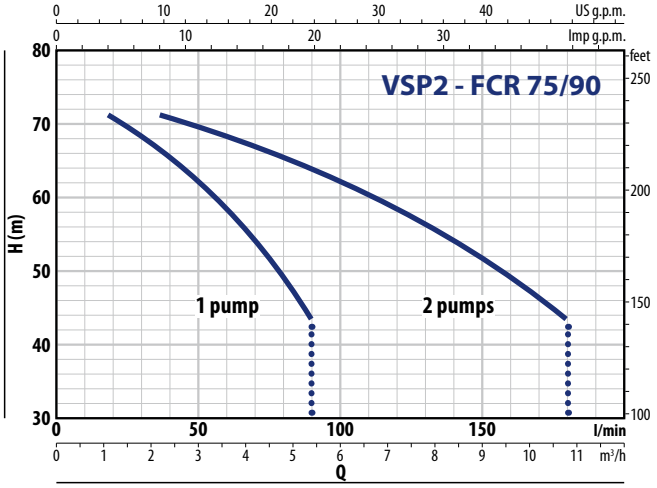

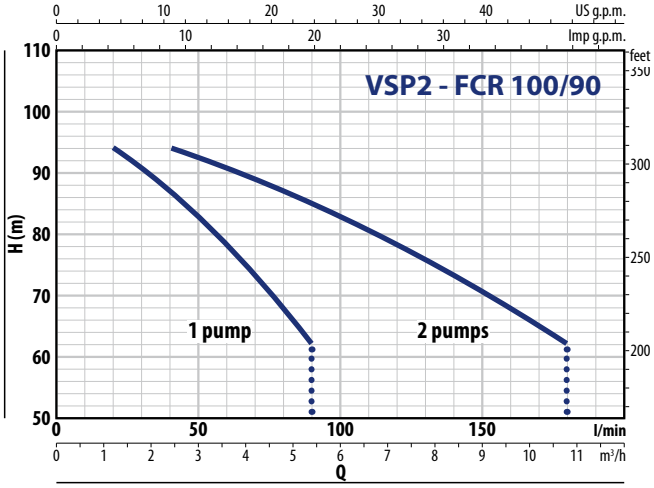

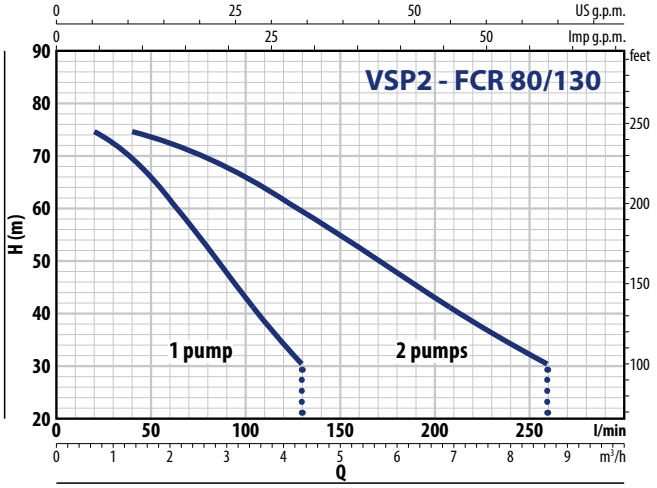

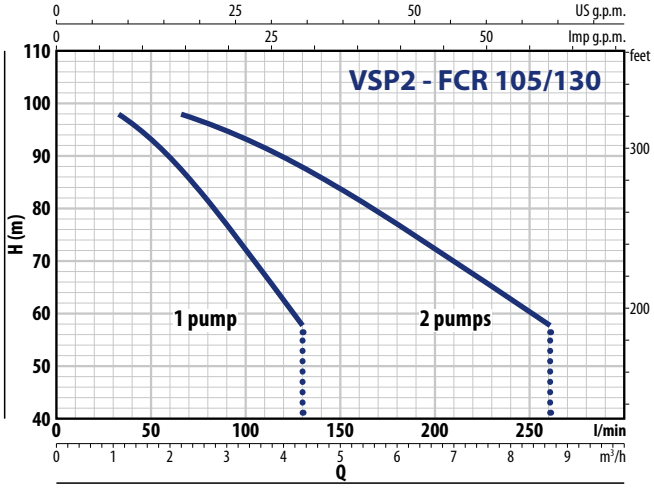

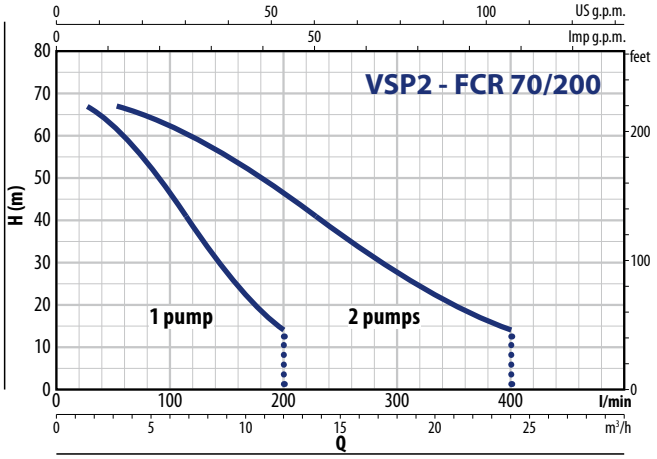

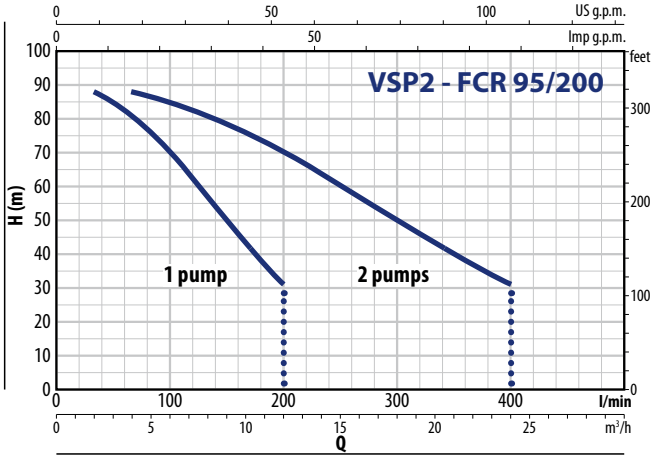

VSP2 – FCR

ABSORPTION

TYPE **Single-phase**	VOLTAGE **230 V**
VSP2m - FCR 75/90	2 x 9.8 A
VSP2m - FCR 80/130	2 x 9.8 A
VSP2m - FCR 70/200	2 x 9.8 A

TYPE **Three-phase**	VOLTAGE **400 V**
VSP2 - FCR 75/90	2 x 3.6 A
VSP2 - FCR 100/90	2 x 4.9 A
VSP2 - FCR 80/130	2 x 3.6 A
VSP2 - FCR 105/130	2 x 4.9 A
VSP2 - FCR 70/200	2 x 3.6 A
VSP2 - FCR 95/200	2 x 4.9 A

DIMENSIONS AND WEIGHT

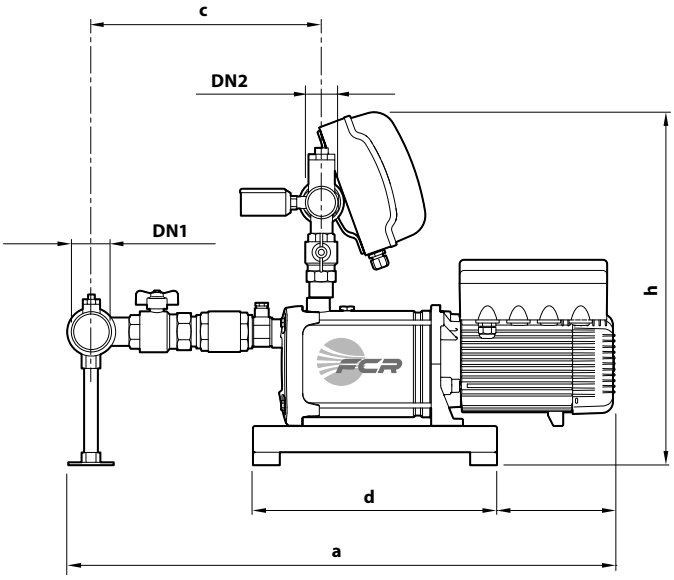

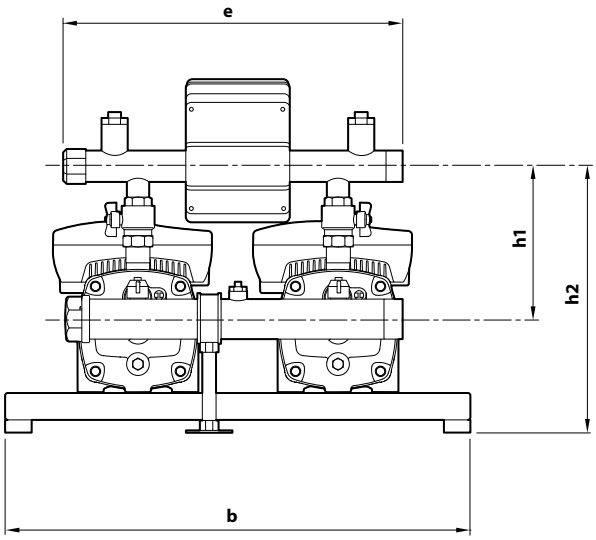

TYPE		PORTS		DIMENSIONS mm								kg	
Single-phase	**Three-phase**	DN1	DN2	a	b	c	d	e	h	h1	h2	1~	3~
VSP2m - FCR 75/90	**VSP2 - FCR 75/90**	**2"**	**1½"**	760	700	339	370	510	560	205	394	80	80
–	**VSP2 - FCR 100/90**			786								–	81
VSP2m - FCR 80/130	**VSP2 - FCR 80/130**			760								81	81
–	**VSP2 - FCR 105/130**			786								–	81
VSP2m - FCR 70/200	**VSP2 - FCR 70/200**	**2½"**	**1½"**	803		375						87	87
–	**VSP2 - FCR 95/200**			829								–	87

FIELD AND PERFORMANCE DATA

50 Hz

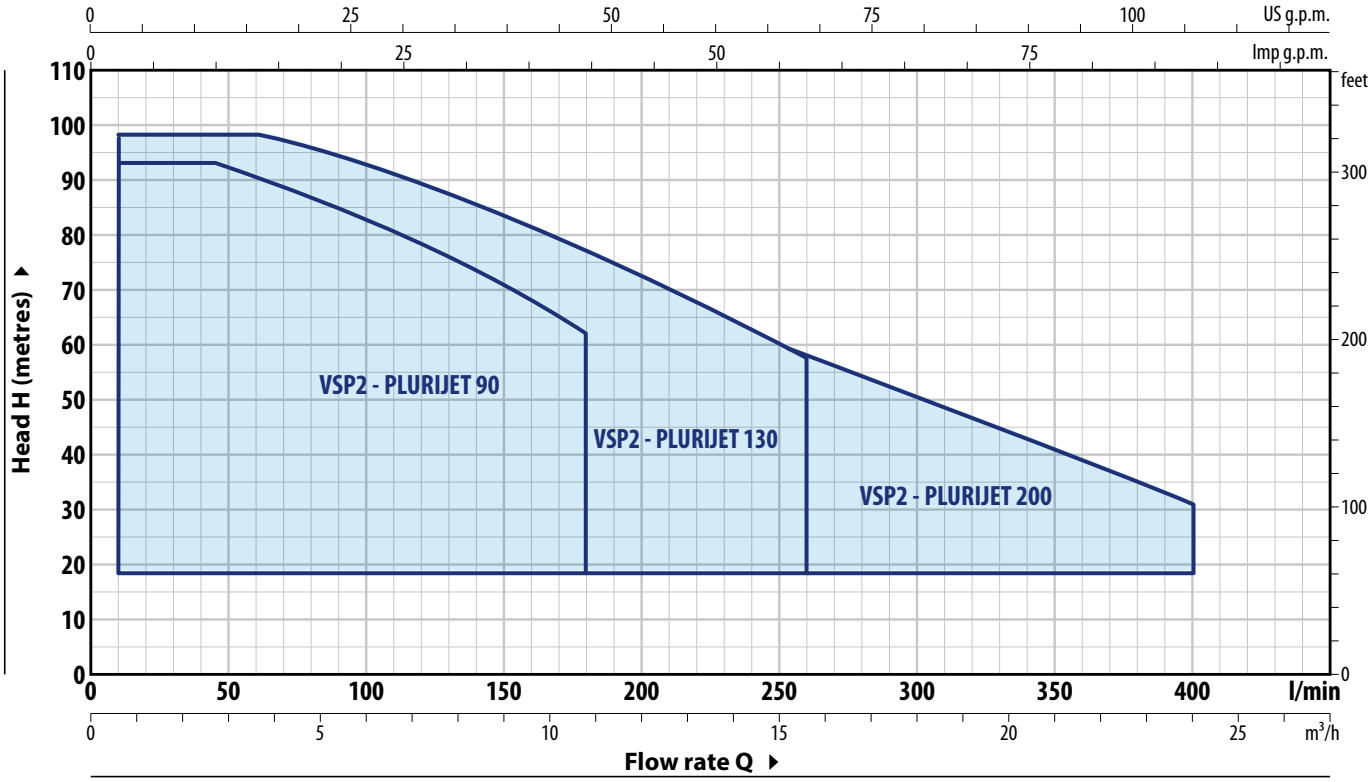

TYPE Single-phase	POWER P2 kW	POWER P2 HP	Q m³/h	0	0.6	1.2	2.4	4.8	6	7.2	9.6	10.8	12	14.4	15.6	18	20.4	24
			Q l/min	**0**	**10**	**20**	**40**	**80**	**100**	**120**	**160**	**180**	**200**	**240**	**260**	**300**	**340**	**400**
VSP2m - PLURIJET 75/90	2x1.5	2x2		71.5	71.5	71.5	71	66	63	59.5	49.5	43.5						
VSP2m - PLURIJET 80/130	2x1.5	2x2	**H** metres	74.5	74.5	74.5	74.5	69.5	66	62	52.5	48	43	34	30			
VSP2m - PLURIJET 70/200	2x1.5	2x2		65.5	65.5	65.5	65.5	65	62.5	60	53.5	50	46	38.5	35	27.5	21	14

TYPE Three-phase	POWER P2 kW	POWER P2 HP	Q m³/h	0	0.6	1.2	2.4	4.8	6	7.2	9.6	10.8	12	14.4	15.6	18	20.4	24
			Q l/min	**0**	**10**	**20**	**40**	**80**	**100**	**120**	**160**	**180**	**200**	**240**	**260**	**300**	**340**	**400**
VSP2 - PLURIJET 75/90	2x1.5	2x2		71.5	71.5	71.5	71	66	63	59.5	49.5	43.5						
VSP2 - PLURIJET 100/90	2x2.2	2x3		94	94	94	94	87.5	83	78.5	68	62.5						
VSP2 - PLURIJET 80/130	2x1.5	2x2		74.5	74.5	74.5	74.5	69.5	66	62	52.5	48	43	34	30			
VSP2 - PLURIJET 105/130	2x2.2	2x3	**H** metres	98	98	98	98	96	93	89.5	81	76.5	72	62	57.5			
VSP2 - PLURIJET 70/200	2x1.5	2x2		65.5	65.5	65.5	65.5	65	62.5	60	53.5	50	46	38.5	35	27.5	21	14
VSP2 - PLURIJET 95/200	2x2.2	2x3		87.5	87.5	87.5	87.5	87	85	82.5	76.5	73.5	70	62.5	58.5	50.5	42	31

Q = Flow rate **H** = Total manometric head

Performance curves comply with EN ISO 9906 Grade 3B tolerance limits.

※ **The data shown in the diagram and tables indicate performance with 2 pumps in operation**

VSP2 – PLURIJET

PERFORMANCE CURVES

50 Hz

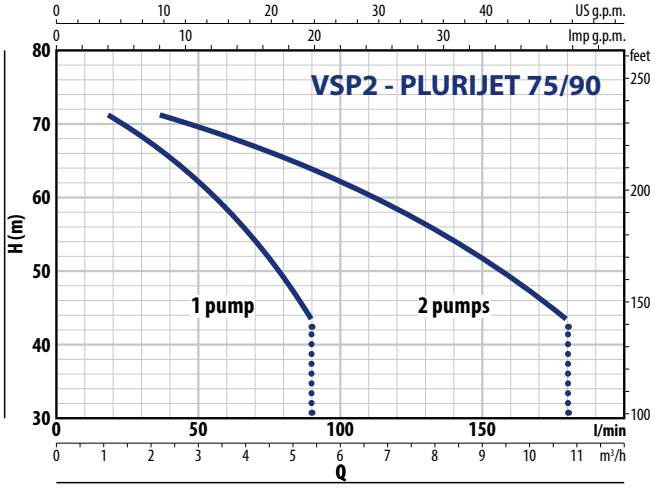

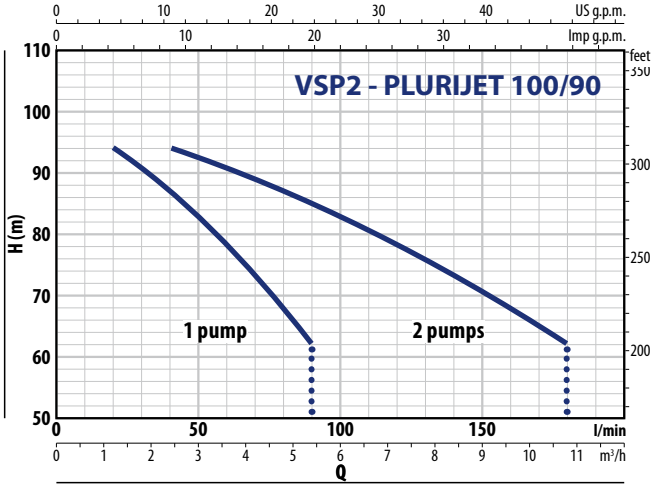

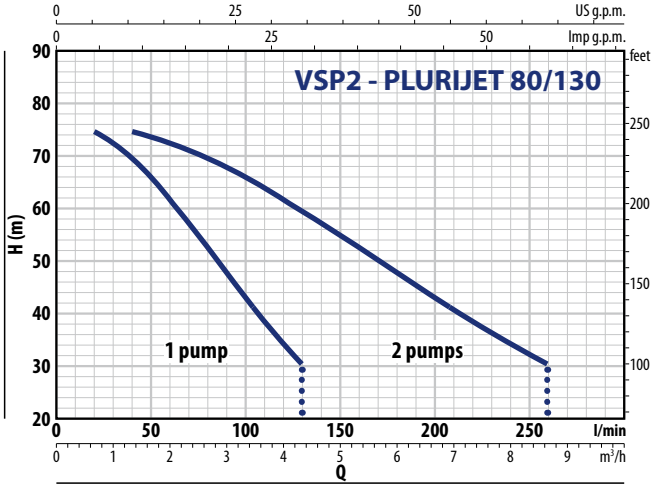

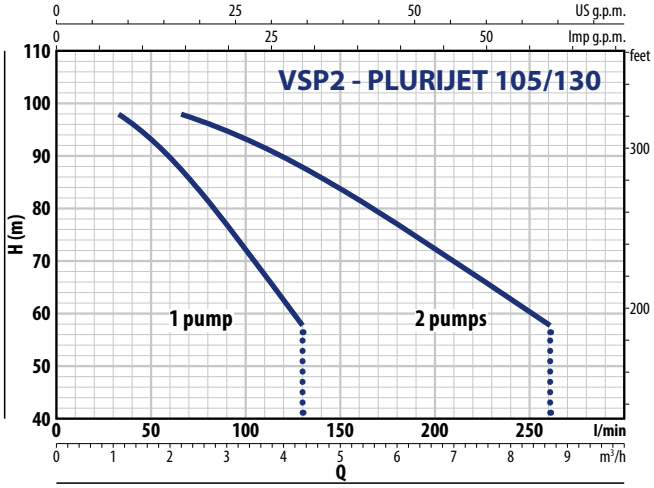

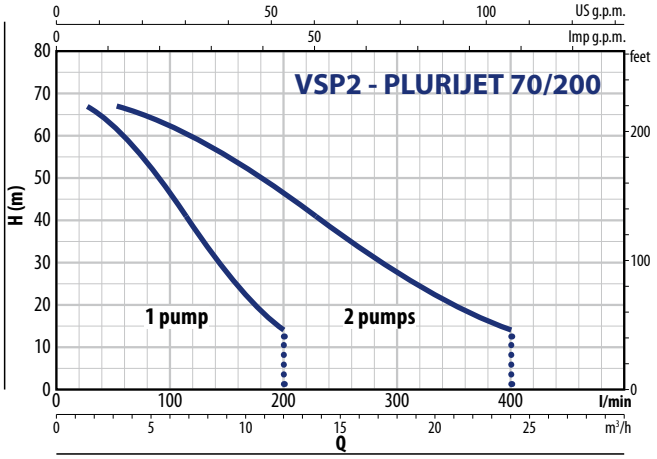

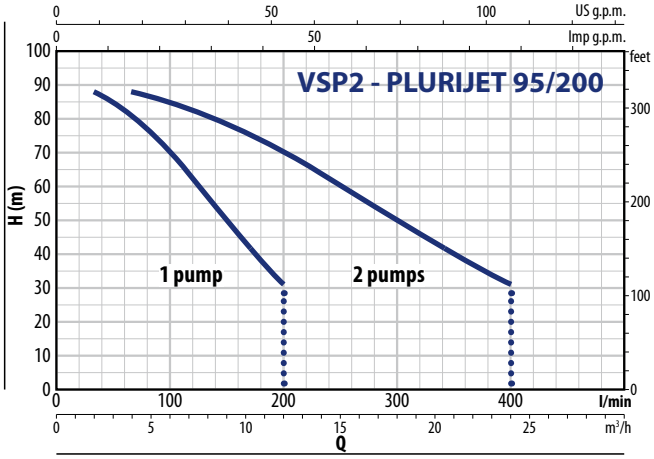

ABSORPTION

TYPE **Single-phase**	VOLTAGE **230 V**
VSP2m - PLURIJET 75/90	2 x 9.8 A
VSP2m - PLURIJET 80/130	2 x 9.8 A
VSP2m - PLURIJET 70/200	2 x 9.8 A

TYPE **Three-phase**	VOLTAGE **400 V**
VSP2 - PLURIJET 75/90	2 x 3.6 A
VSP2 - PLURIJET 100/90	2 x 4.9 A
VSP2 - PLURIJET 80/130	2 x 3.6 A
VSP2 - PLURIJET 105/130	2 x 4.9 A
VSP2 - PLURIJET 70/200	2 x 3.6 A
VSP2 - PLURIJET 95/200	2 x 4.9 A

DIMENSIONS AND WEIGHT

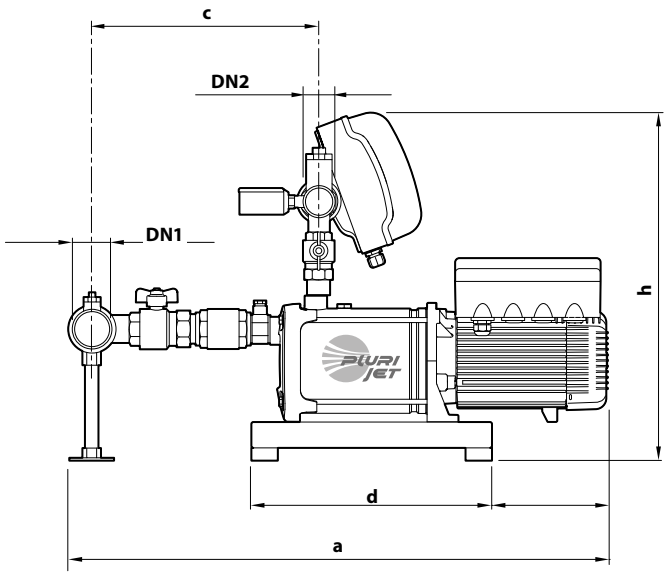

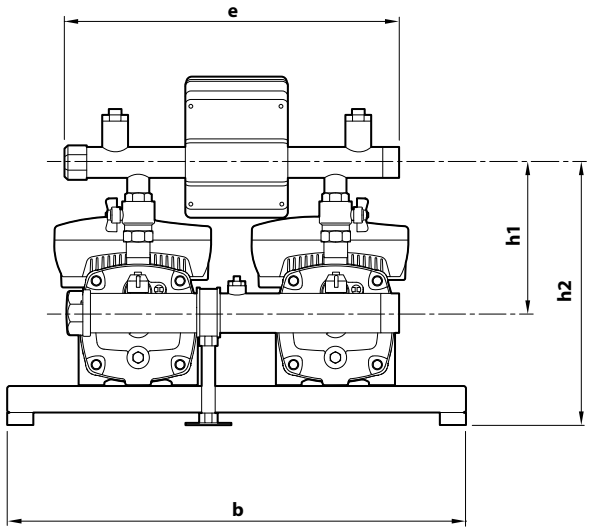

TYPE		PORTS		DIMENSIONS mm								kg	
Single-phase	**Three-phase**	DN1	DN2	a	b	c	d	e	h	h1	h2	1~	3~
VSP2m - PLURIJET 75/90	**VSP2 - PLURIJET 75/90**	**2"**	**1½"**	812	700	339	370	510	560	205	394	80	80
–	**VSP2 - PLURIJET 100/90**			838								–	85
VSP2m - PLURIJET 80/130	**VSP2 - PLURIJET 80/130**			812								80	81
–	**VSP2 - PLURIJET 105/130**			838								–	85
VSP2m - PLURIJET 70/200	**VSP2 - PLURIJET 70/200**	**2½"**	**1½"**	855		375						83	83
–	**VSP2 - PLURIJET 95/200**			881								–	87

VSP2 – MK

FIELD AND PERFORMANCE DATA

50 Hz

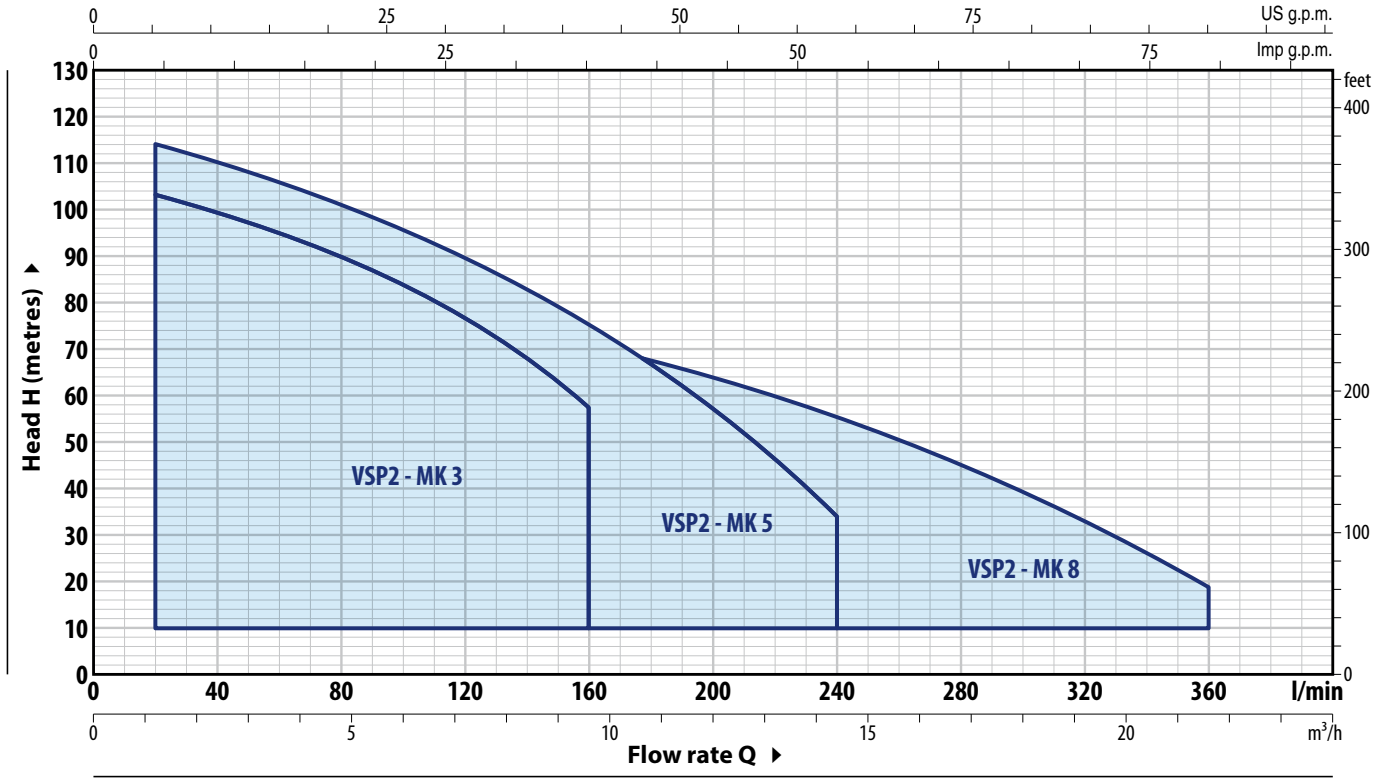

TYPE		POWER P2		Q m³/h	0	1.2	2.4	4.8	7.2	9.6	12.0	14.4	16.8	19.2	21.6
Single-phase	**Three-phase**	**kW**	**HP**	Q l/min	**0**	**20**	**40**	**80**	**120**	**160**	**200**	**240**	**280**	**320**	**360**
VSP2m - MK 3/3	**VSP2 - MK 3/3**	2x0.75	2x1	H metres	52.5	51.5	50	45	38.5	29					
VSP2m - MK 3/5	**VSP2 - MK 3/5**	2x1.1	2x1.5		87	85	83	75	64	48					
VSP2m - MK 3/6	**VSP2 - MK 3/6**	2x1.5	2x2		105	103	100	90	77	58					
VSP2m - MK 5/4	**VSP2 - MK 5/4**	2x0.75	2x1		57	–	54	50	45	37.5	28.5	17			
VSP2m - MK 5/5	**VSP2 - MK 5/5**	2x1.1	2x1.5		71	–	67.5	62.5	56	47	35.5	21.5			
VSP2m - MK 5/7	**VSP2 - MK 5/7**	2x1.5	2x2		99	–	95	88	78	66	50	30			
–	**VSP2 - MK 5/8**	2x2.2	2x3		114	–	108	100	90	75	57	34			
VSP2m - MK 8/4	**VSP2 - MK 8/4**	2x1.1	2x1.5		56	–	–	53.5	51	47.5	43	37.5	30.5	22.1	12
VSP2m - MK 8/5	**VSP2 - MK 8/5**	2x1.5	2x2		70	–	–	67	64	59.5	54	47	38	27.5	15.5
–	**VSP2 - MK 8/6**	2x2.2	2x3		84	–	–	80	77	72	64.5	56	45.5	33	18.5

Q = Flow rate **H** = Total manometric head

Performance curves comply with EN ISO 9906 Grade 3B tolerance limits.

※ **The data shown in the diagram and table indicate performance with 2 pumps in operation**

PERFORMANCE CURVES

50 Hz

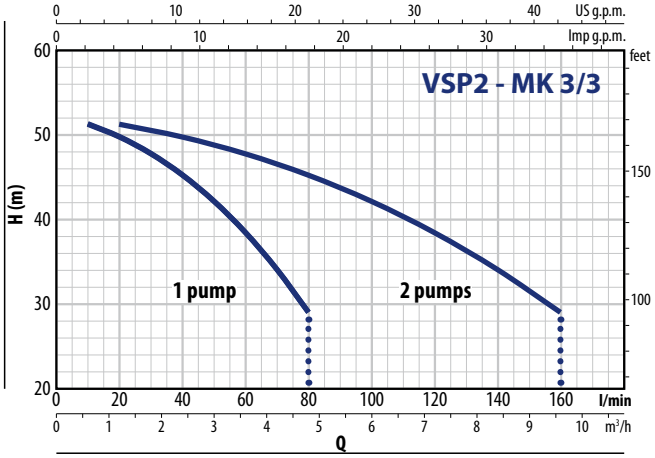

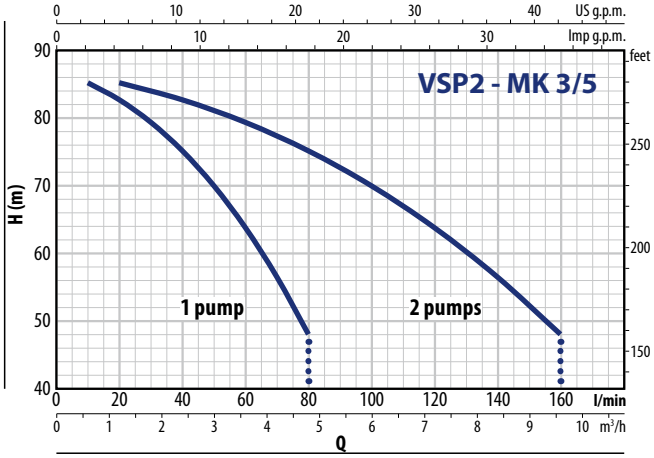

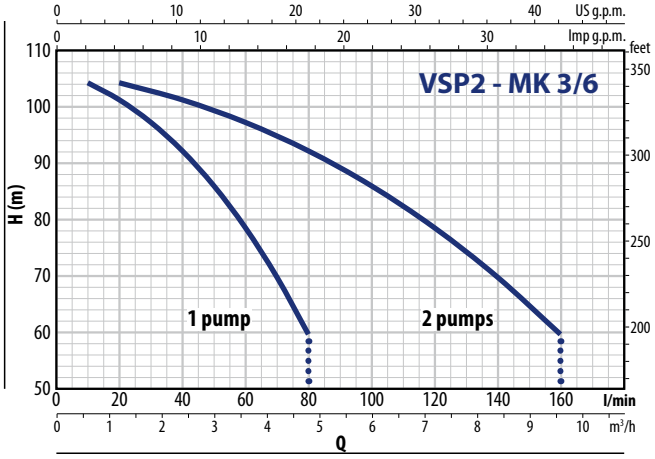

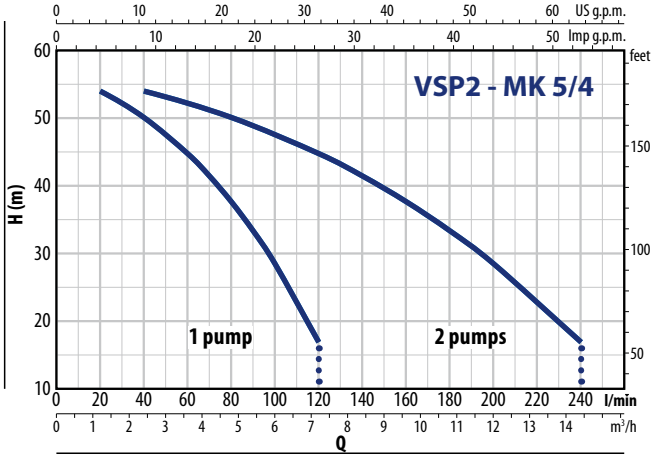

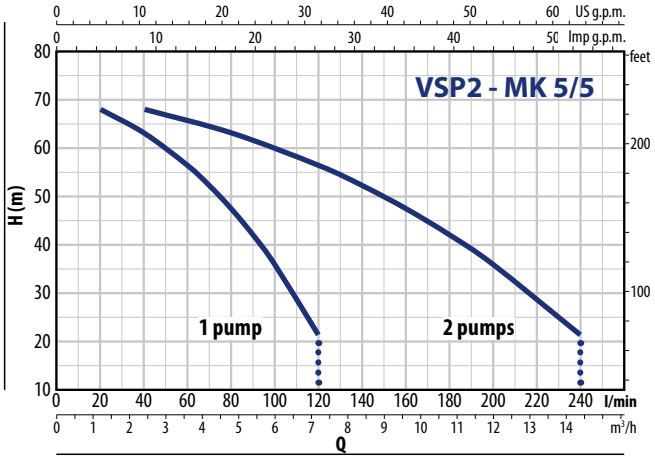

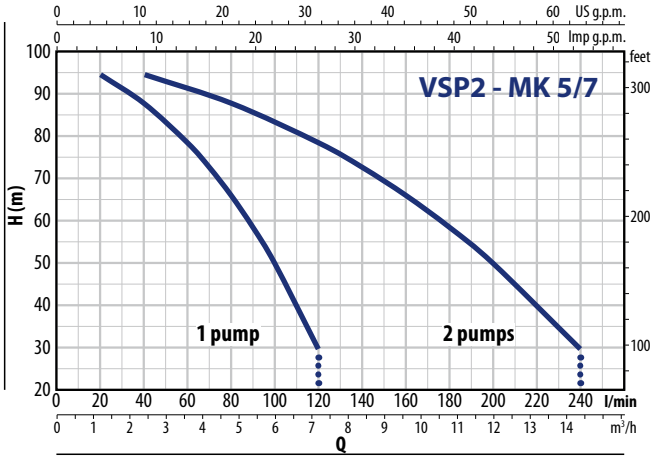

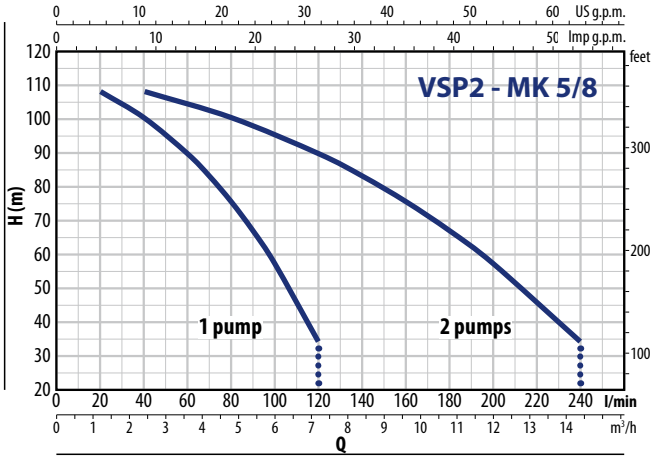

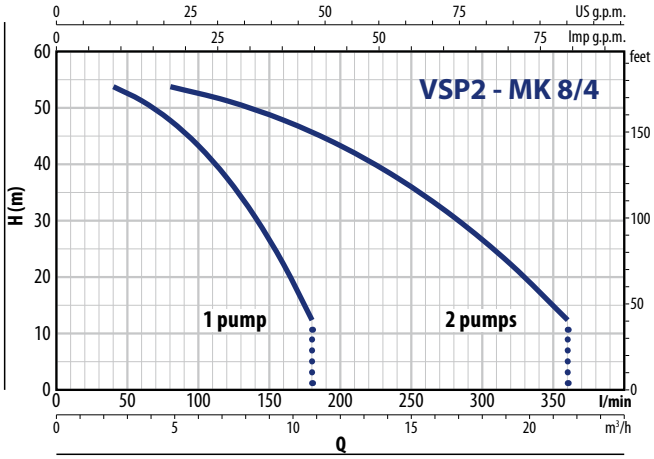

VSP2 – MK

PERFORMANCE CURVES

50 Hz

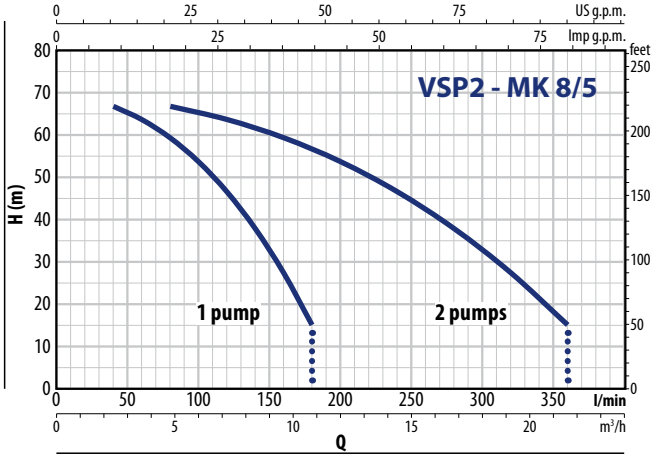

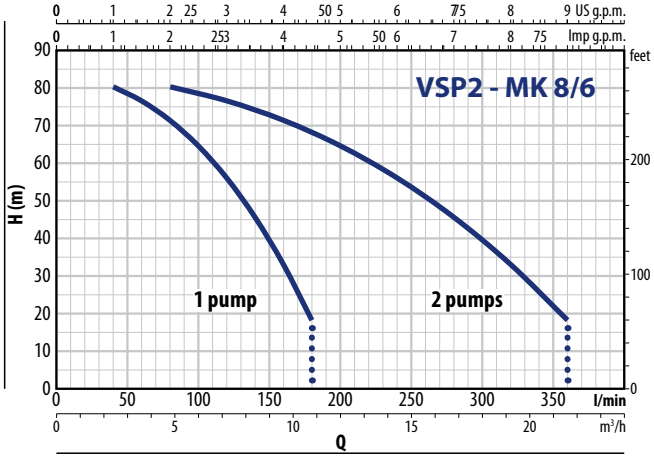

ABSORPTION

TYPE **Single-phase**	VOLTAGE **230 V**
VSP2m - MK 3/3	2 x 6.2 A
VSP2m - MK 3/5	2 x 7.8 A
VSP2m - MK 3/6	2 x 9.0 A
VSP2m - MK 5/4	2 x 6.4 A
VSP2m - MK 5/5	2 x 6.5 A
VSP2m - MK 5/7	2 x 9.0 A
VSP2m - MK 8/4	2 x 8.3 A
VSP2m - MK 8/5	2 x 10.0 A

TYPE **Three-phase**	VOLTAGE **400 V**
VSP2 - MK 3/3	2 x 1.7 A
VSP2 - MK 3/5	2 x 2.3 A
VSP2 - MK 3/6	2 x 2.8 A
VSP2 - MK 5/4	2 x 2.0 A
VSP2 - MK 5/5	2 x 2.2 A
VSP2 - MK 5/7	2 x 3.0 A
VSP2 - MK 5/8	2 x 3.5 A
VSP2 - MK 8/4	2 x 2.8 A
VSP2 - MK 8/5	2 x 3.4 A
VSP2 - MK 8/6	2 x 3.8 A

DIMENSIONS AND WEIGHT

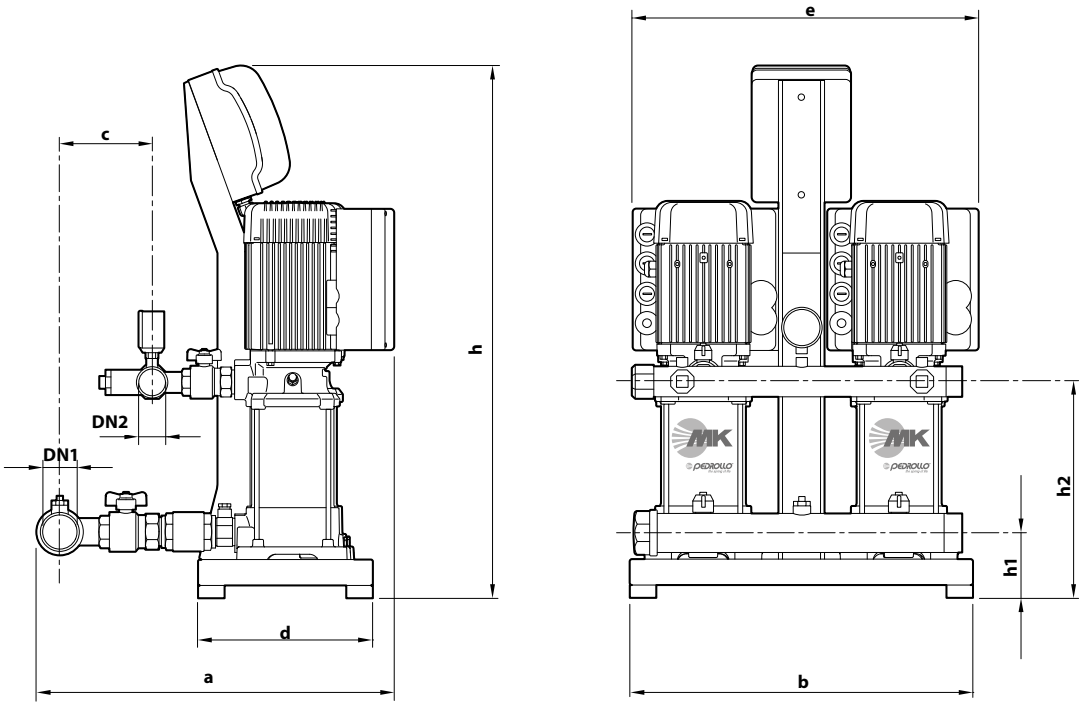

TYPE		PORTS		DIMENSIONS mm								kg	
Single-phase	**Three-phase**	DN1	DN2	a	b	c	d	e	h	h1	h2	1~	3~
VSP2m - MK 3/3	**VSP2 - MK 3/3**										235	75	75
VSP2m - MK 3/5	**VSP2 - MK 3/5**										289	79	79
VSP2m - MK 3/6	**VSP2 - MK 3/6**										316	83	83
VSP2m - MK 5/4	**VSP2 - MK 5/4**	**2"**	**1½"**	555		135					262	76	76
VSP2m - MK 5/5	**VSP2 - MK 5/5**				530		270	510	863	102	289	79	79
VSP2m - MK 5/7	**VSP2 - MK 5/7**										343	83	83
–	**VSP2 - MK 5/8**										370	-	84
VSP2m - MK 8/4	**VSP2 - MK 8/4**										316	82	82
VSP2m - MK 8/5	**VSP2 - MK 8/5**	**2½"**	**1½"**	600		171					262	83	83
–	**VSP2 - MK 8/6**										289	-	89

VSP2 – HT-PRO

FIELD AND PERFORMANCE DATA

50 Hz

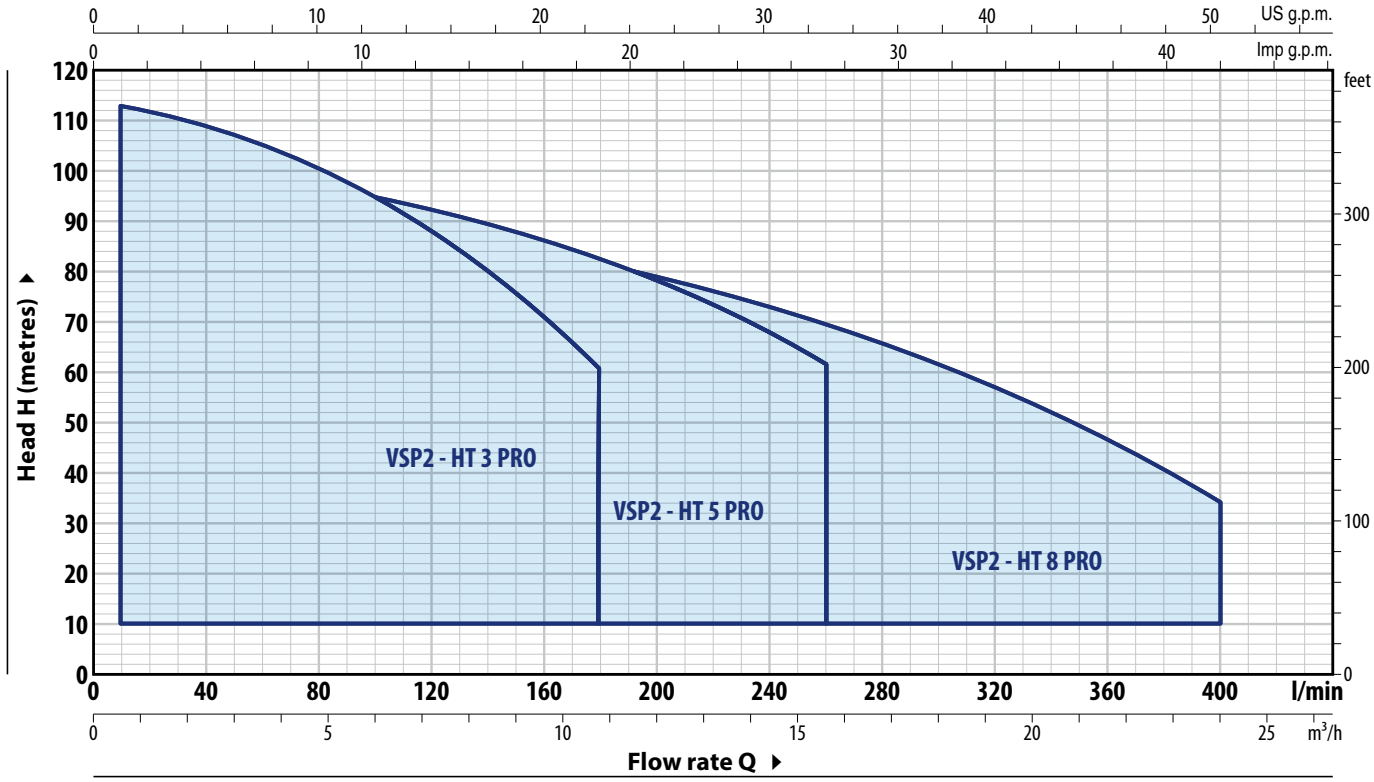

TYPE		POWER (P2)		Q									
					m³/h	0	0.6	1.2	2.4	4.8	7.2	9.6	10.8
Single-phase	**Three-phase**	**kW**	**HP**		l/min	**0**	**10**	**20**	**40**	**80**	**120**	**160**	**180**
VSP2 - HTm 3/4 PRO	**VSP2 - HT 3/4 PRO**	2x0.75	2x1	**H** metres		65	65	63.5	62	57	50	40.5	35
VSP2 - HTm 3/5 PRO	**VSP2 - HT 3/5 PRO**	2x1.1	2x1.5			81	80	79	77	71	62.5	51	44
VSP2 - HTm 3/6 PRO	**VSP2 - HT 3/6 PRO**	2x1.5	2x2			97	96	95	93	86	75	61	52
–	**VSP2 - HT 3/7 PRO**	2x1.8	2x2.5			113	112	111	108	100	88	71	61

TYPE		POWER (P2)		Q											
					m³/h	0	0.6	1.2	2.4	4.8	7.2	9.6	10.8	12	15.6
Single-phase	**Three-phase**	**kW**	**HP**		l/min	**0**	**10**	**20**	**40**	**80**	**120**	**160**	**180**	**200**	**260**
VSP2 - HTm 5/2 PRO	**VSP2 - HT 5/2 PRO**	2x0.75	2x1			35	35	32.7	32.3	32.5	31	25.5	27.5	26	16
VSP2 - HTm 5/3 PRO	**VSP2 - HT 5/3 PRO**	2x1.1	2x1.5			51.5	52	51	50.5	49	46.5	43	41	39	31
VSP2 - HTm 5/4 PRO	**VSP2 - HT 5/4 PRO**	2x1.5	2x2	**H** metres		68.5	68.5	68	67	65	62	57.5	55	52	41
–	**VSP2 - HT 5/5 PRO**	2x1.8	2x2.5			86	85	85	84	81	77	72	68.5	65	51.5
–	**VSP2 - HT 5/6 PRO**	2x2.2	2x3			103	103	102	101	98	93	86	82	78	62

TYPE		POWER (P2)		Q												
					m³/h	0	2.4	4.8	7.2	9.6	12	14.4	16.8	19.2	21.6	24
Single-phase	**Three-phase**	**kW**	**HP**		l/min	**0**	**40**	**80**	**120**	**160**	**200**	**240**	**280**	**320**	**360**	**400**
VSP2 - HTm 8/3 PRO	**VSP2 - HT 8/3 PRO**	2x1.1	2x1.5			47	46.5	45.5	44	42	39.5	36.5	32.5	28	23.1	17
VSP2 - HTm 8/4 PRO	**VSP2 - HT 8/4 PRO**	2x1.5	2x2			62.5	62	60.5	58.5	56	53	48.5	43.5	37.5	31	23
–	**VSP2 - HT 8/5 PRO**	2x1.8	2x2.5	**H** metres		78	77.5	76	73	70	66	61	54.5	47	38.5	28.5
–	**VSP2 - HT 8/6 PRO**	2x2.2	2x3			94	93	91	88	84	79	73	65.5	56.5	46	34.5

Q = Flow rate **H** = Total manometric head

Performance curves comply with EN ISO 9906 Grade 3B tolerance limits.

※ **The data shown in the diagram and tables indicate performance with 2 pumps in operation**

PERFORMANCE CURVES

50 Hz

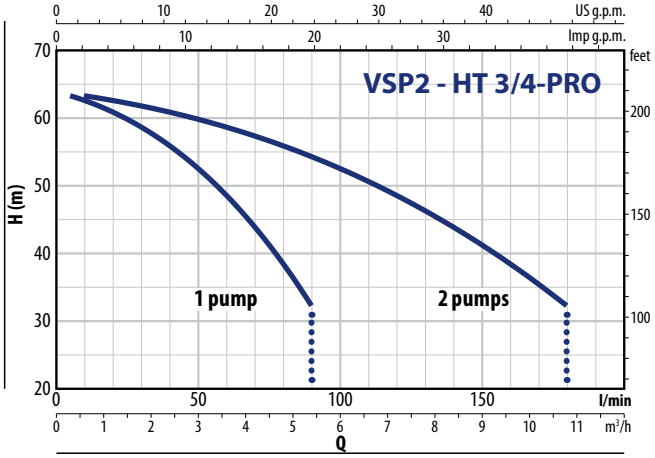

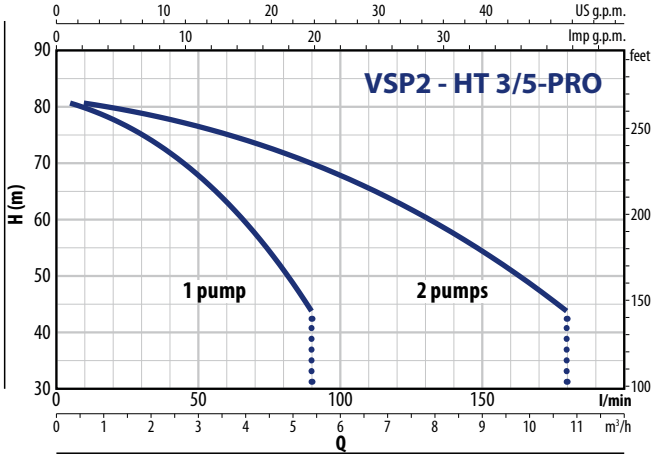

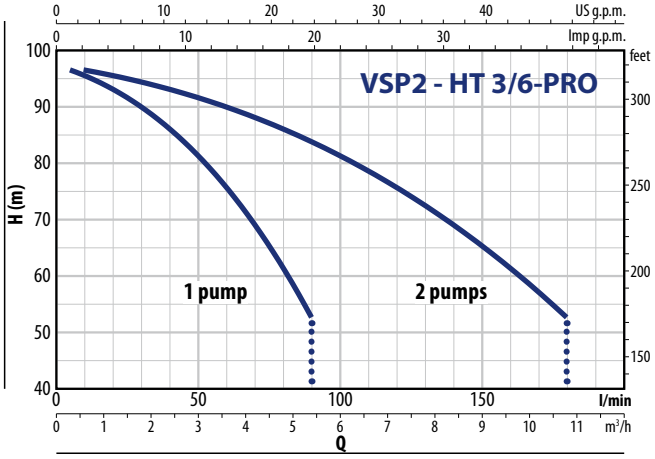

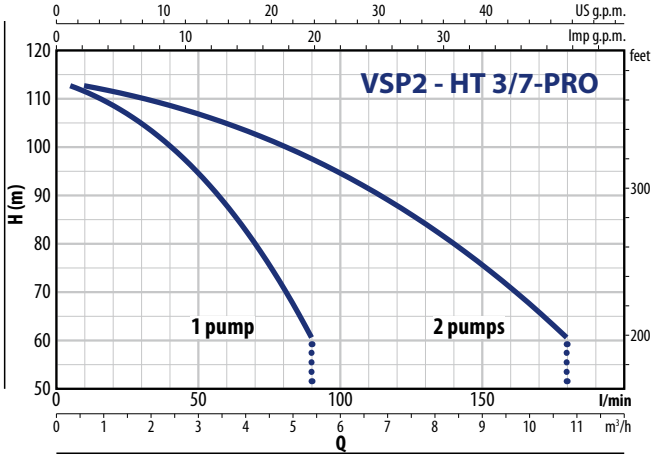

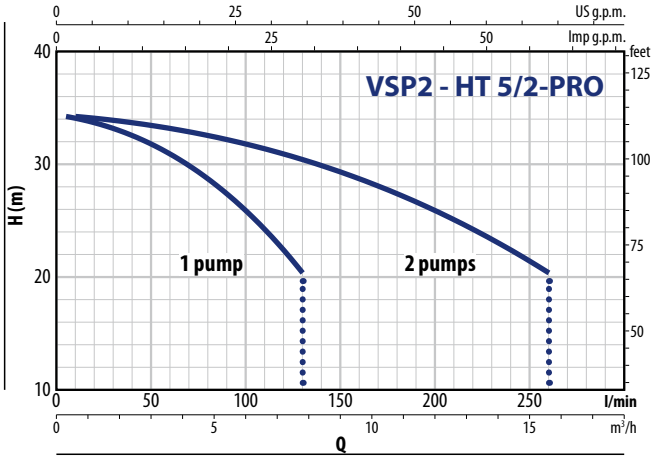

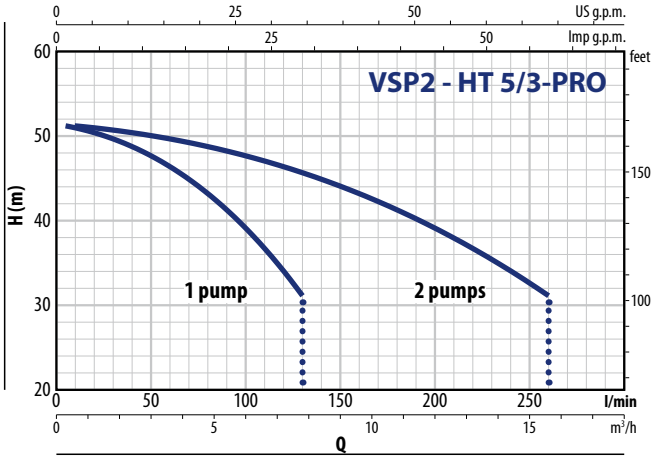

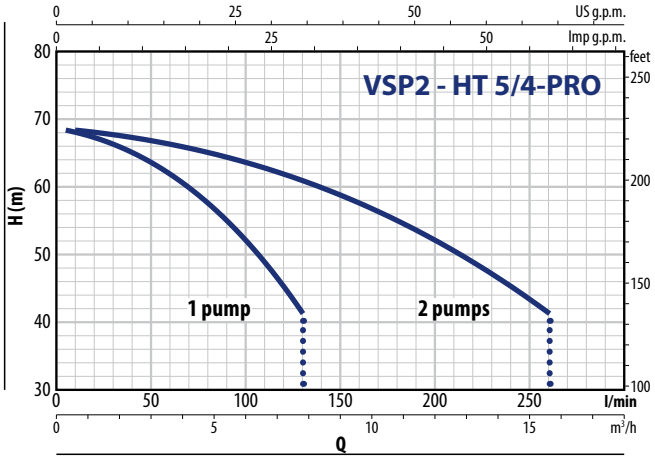

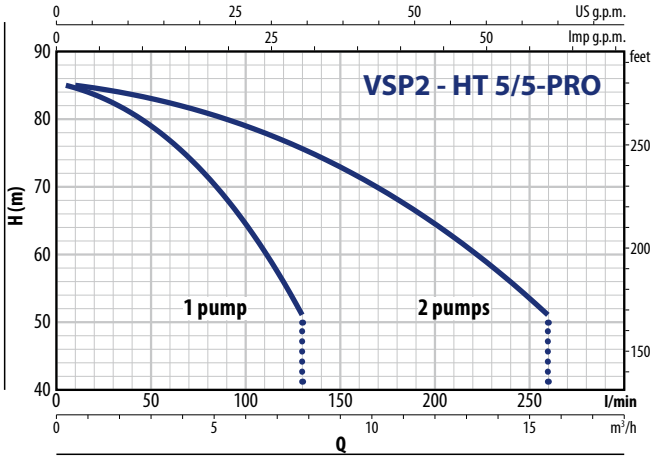

VSP2 – HT-PRO

PERFORMANCE CURVES

50 Hz

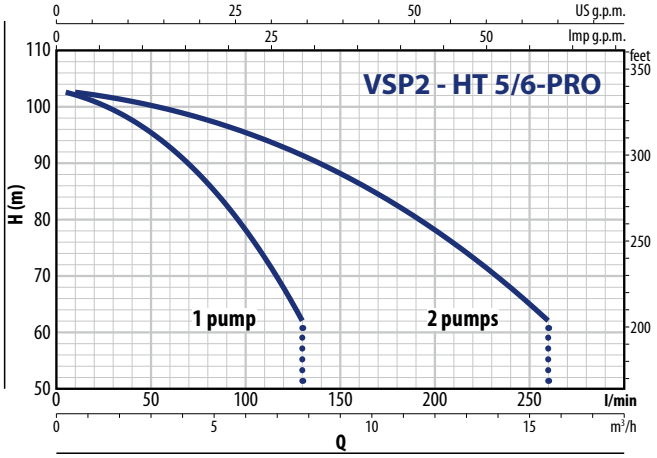

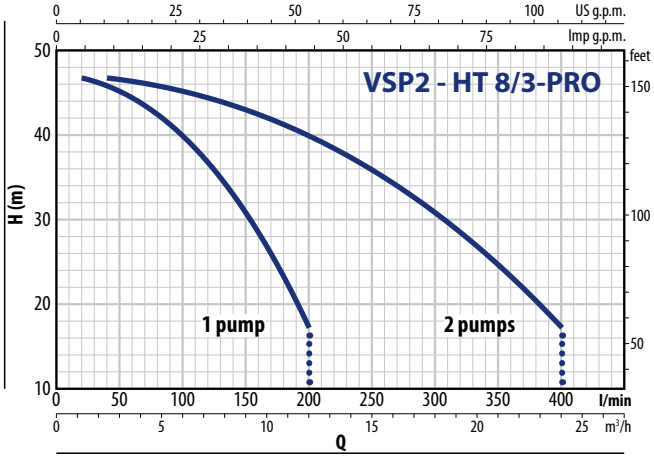

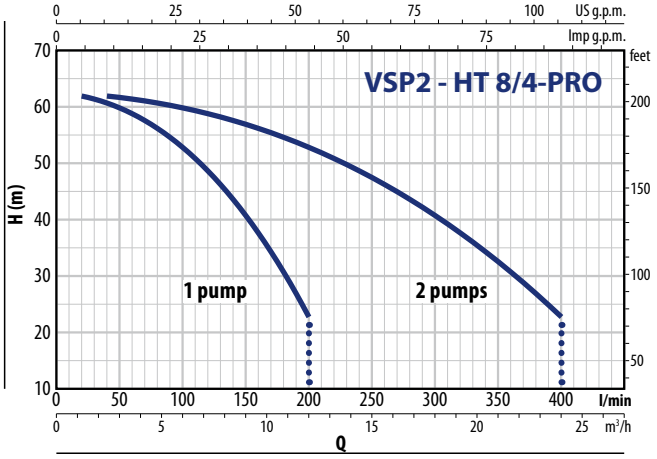

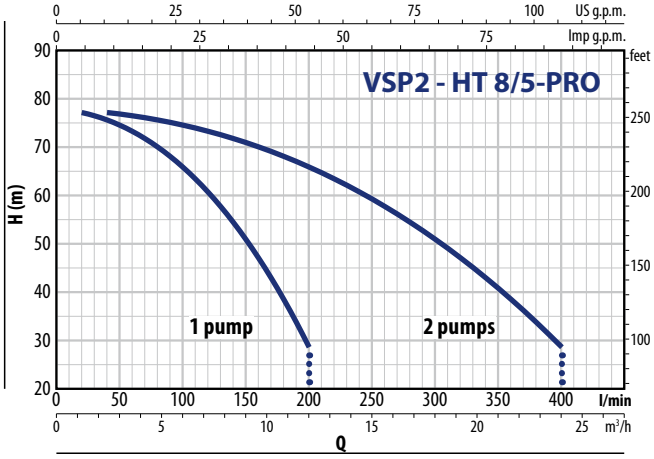

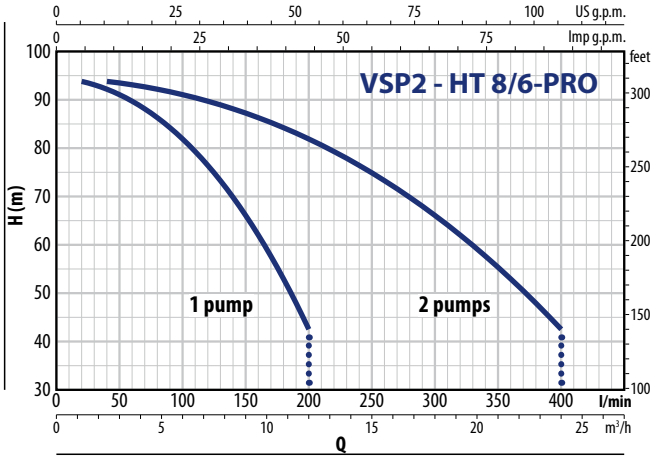

ABSORPTION

TYPE **Single-phase**	VOLTAGE **230 V**
VSP2m - HT 3/4 PRO	2 x 7.5 A
VSP2m - HT 3/5 PRO	2 x 9.0 A
VSP2m - HT 3/6 PRO	2 x 10.5 A
VSP2m - HT 5/2 PRO	2 x 7.0 A
VSP2m - HT 5/3 PRO	2 x 8.0 A
VSP2m - HT 5/4 PRO	2 x 9.5 A
VSP2m - HT 8/3 PRO	2 x 8.5 A
VSP2m - HT 8/4 PRO	2 x 10.0 A

TYPE **Three-phase**	VOLTAGE **400 V**
VSP2 - HT 3/4 PRO	2 x 2.5 A
VSP2 - HT 3/5 PRO	2 x 3.0 A
VSP2 - HT 3/6 PRO	2 x 3.5 A
VSP2 - HT 3/7 PRO	2 x 4.2 A
VSP2 - HT 5/2 PRO	2 x 2.3 A
VSP2 - HT 5/3 PRO	2 x 2.4 A
VSP2 - HT 5/4 PRO	2 x 3.2 A
VSP2 - HT 5/5 PRO	2 x 4.0 A
VSP2 - HT 5/6 PRO	2 x 4.3 A
VSP2 - HT 8/3 PRO	2 x 3.0 A
VSP2 - HT 8/4 PRO	2 x 3.4 A
VSP2 - HT 8/5 PRO	2 x 4.0 A
VSP2 - HT 8/6 PRO	2 x 4.5 A

DIMENSIONS AND WEIGHT

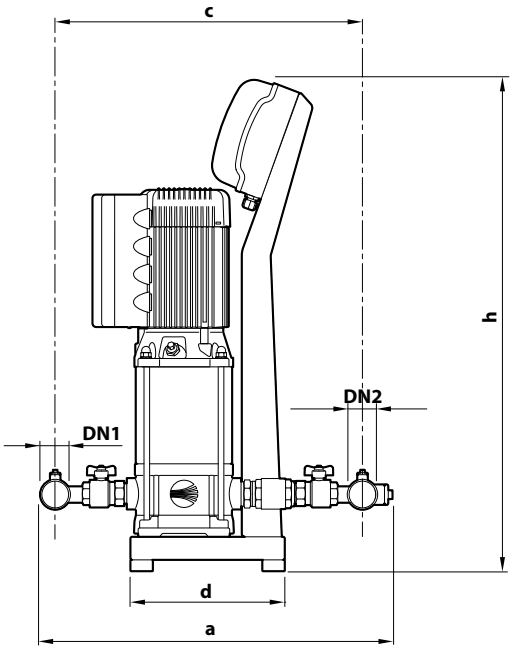

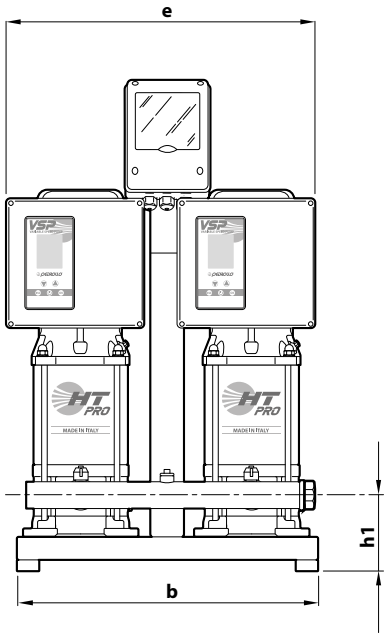

TYPE		PORTS		DIMENSIONS mm							kg	
Single-phase	**Three-phase**	DN1	DN2	a	b	c	d	e	h	h1	1~	3~
VSP2m-HT 3/4 PRO	**VSP2-HT 3/4 PRO**	**2"**	**2"**	694	530	576	270	542	863	135	97	97
VSP2m-HT 3/5 PRO	**VSP2-HT 3/5 PRO**										97	97
VSP2m-HT 3/6 PRO	**VSP2-HT 3/6 PRO**										100	100
–	**VSP2-HT 3/7 PRO**										–	110
VSP2m-HT 5/2 PRO	**VSP2-HT 5/2 PRO**	**2"**	**2"**	740		622					96	96
VSP2m-HT 5/3 PRO	**VSP2-HT 5/3 PRO**										96	96
VSP2m-HT 5/4 PRO	**VSP2-HT 5/4 PRO**										100	100
–	**VSP2-HT 5/5 PRO**										–	105
–	**VSP2-HT 5/6 PRO**										–	107
VSP2m-HT 8/3 PRO	**VSP2-HT 8/3 PRO**	**2½"**	**2½"**	833		698				140	101	101
VSP2m-HT 8/4 PRO	**VSP2-HT 8/4 PRO**										105	105
–	**VSP2-HT 8/5 PRO**										–	112
–	**VSP2-HT 8/6 PRO**										–	114

GPW Variable speed pumping units

Clean water

Domestic use

Civil use

INSTALLATION AND USE

GPW is a pre-assembled system designed to connect to water mains or a primary collection tanks. It provides water supply and pressurization and is ideal for residential, commercial, and public buildings. It's also suitable for hotels, park irrigation, as well as industrial water handling and treatment.

GPW is compatible with clean water and aqueous solutions that do not chemically or mechanically harm the materials used and are free from abrasive or fibrous substances.

PRODUCT DESCRIPTION

GPW is a variable speed pressurization system **comprising two or three pumps** assembled into one unit. It is electronically controlled by two or three **STEADYPRES** devices connected in parallel. These devices automatically adjust the pump operation based on the system's varying water demands, ensuring constant pressure.

When water withdrawal reduces the system pressure, the first pump activates to meet the required flow rate, maintaining pressure at the set value. As the maximum rotation speed is reached, additional pumps start up in sequence to fulfill the system's water demand.

COMPONENTS

※ **Pumps** connected in parallel via suction and discharge manifolds. Each pump is equipped with a ball valve on the suction side and a ball valve and non-return valve (integrated in STEADYPRES) on the discharge side.

※ **BASE** made of metal profile and equipped with adjustable vibration-damping feet.

※ **STEADYPRES ELECTRONIC DEVICES** installed directly on the delivery pipe of each individual pump. They continuously regulate the rotation speed, ensuring a constant pressure even as user demands fluctuate. Each inverter can manage the alternating operation of pumps as needed.

GPW is designed to protect the system from:

※ Dry running

※ overvoltage and undervoltage

※ **CONTROL PANEL** equipped with magnetothermal motor protection circuit breakers for three-phase versions, and magnetothermal circuit breakers for single-phase versions.

GP2W – 5CR

Pressurization units comprising two multistage centrifugal pumps equipped with STEADYPRES inverters capable of maintaining a constant pressure in the system. The GP2W - 5CR are suitable for domestic and residential water supply, garden irrigation, and general clean water handling.

TECHNICAL DATA

- Liquid temperature up to **+40 °C**
- Ambient temperature between **0 °C** and **+40 °C**
- Max. pressure in the pump body **7 bar**
- Continuous running duty **S1**

GP2W – MK

Pressurization units comprising three vertical multistage pumps equipped with STEADYPRES inverters, capable of maintaining constant pressure in the system. GP3W - MK are suitable for residential, commercial, and public water supply, large-scale irrigation, and handling clean water in general.

TECHNICAL DATA

- Liquid temperature up to **+40 °C**
- Ambient temperature between **0 °C** and **+40 °C**
- Max. pressure in pump body **10 bar**
- Continuous running duty **S1**

GP3W – MK

Pressurization units comprising three vertical multistage pumps equipped with STEADYPRES inverters capable of maintaining constant pressure in the system. GP3W - MK are suitable for residential, commercial, and public water supply, large-scale irrigation, and handling clean water in general.

TECHNICAL DATA

- Liquid temperature up to **+40 °C**
- Ambient temperature between **0 °C** and **+40 °C**
- Max. pressure in pump body **10 bar**
- Continuous running duty **S1**

GP2W – 5CR

FIELD AND PERFORMANCE DATA

50 Hz

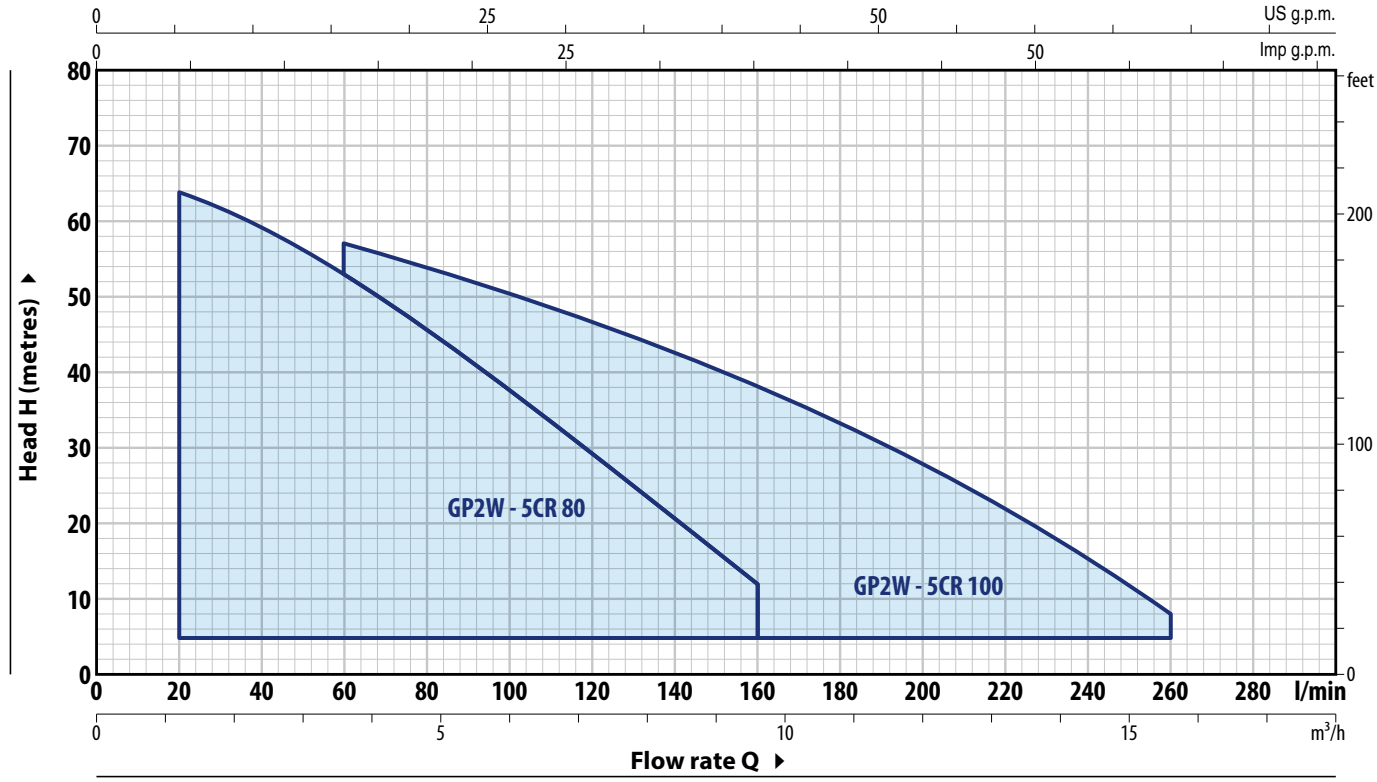

TYPE		POWER P2		Q m³/h	0	1.2	2.4	3.6	4.8	6.0	7.2	8.4	9.6	10.8	12.0	13.2	14.4	15.6
Single-phase	**Three-phase**	**kW**	**HP**	Q l/min	**0**	**20**	**40**	**60**	**80**	**100**	**120**	**140**	**160**	**180**	**200**	**220**	**240**	**260**
GP2Wm - 5CR 80	**GP2W - 5CR 80**	2x0.75	2x1	**H** metres	67	64	59	53	45.5	37.5	29.5	20.5	12					
GP2Wm - 5CR 100	**GP2W - 5CR 100**	2x0.9	2x1.25		63	61.5	59.5	57	53.5	50.5	46.5	42.5	38	33	28	22	15	8

Q = Flow rate **H** = Total manometric head

※ The data shown in the diagram and tables indicate performance with 2 pumps in operation

PERFORMANCE CURVES

50 Hz

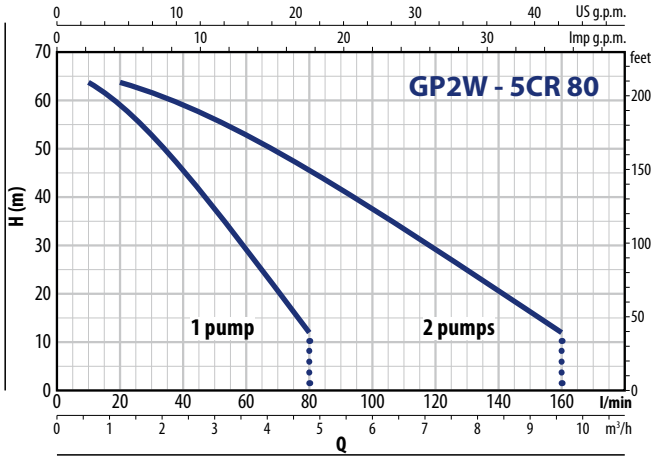

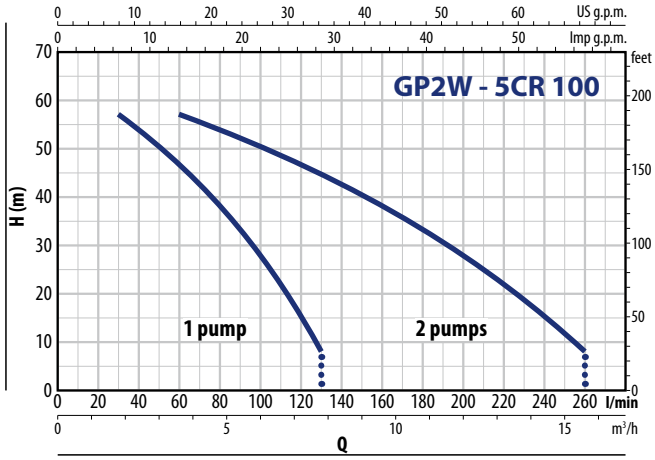

ABSORPTION

TYPE **Single-phase**	VOLTAGE **230 V**
GP2Wm - 5CR 80	2 x 9.0 A
GP2Wm - 5CR 100	2 x 10.0 A

TYPE **Three-phase**	VOLTAGE **400 V**
GP2W - 5CR 80	2 x 3.2 A
GP2W - 5CR 100	2 x 3.2 A

DIMENSIONS AND WEIGHT

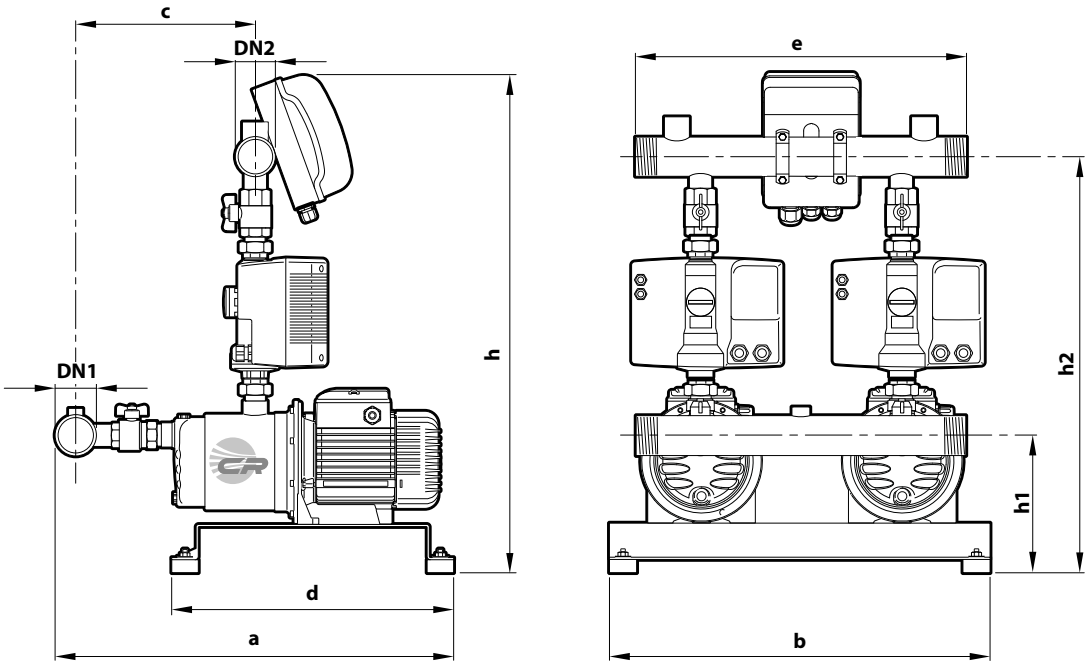

TIPO		BOCCHE		DIMENSIONS mm										kg	
Monofase	**Trifase**	DN1	DN2	a	b	c	d	e	h 1~	h 3~	h1	h2 1~	h2 3~	1~	3~
GP2Wm - 5CR 80	**GP2W - 5CR 80**	**1½"**	**1½"**	608	570	273	420	500	754	712	205	624	582	64	67
GP2Wm - 5CR 100	**GP2W - 5CR 100**	**2"**		687		347								65	68

GP2W – MK

FIELD AND PERFORMANCE DATA

50 Hz

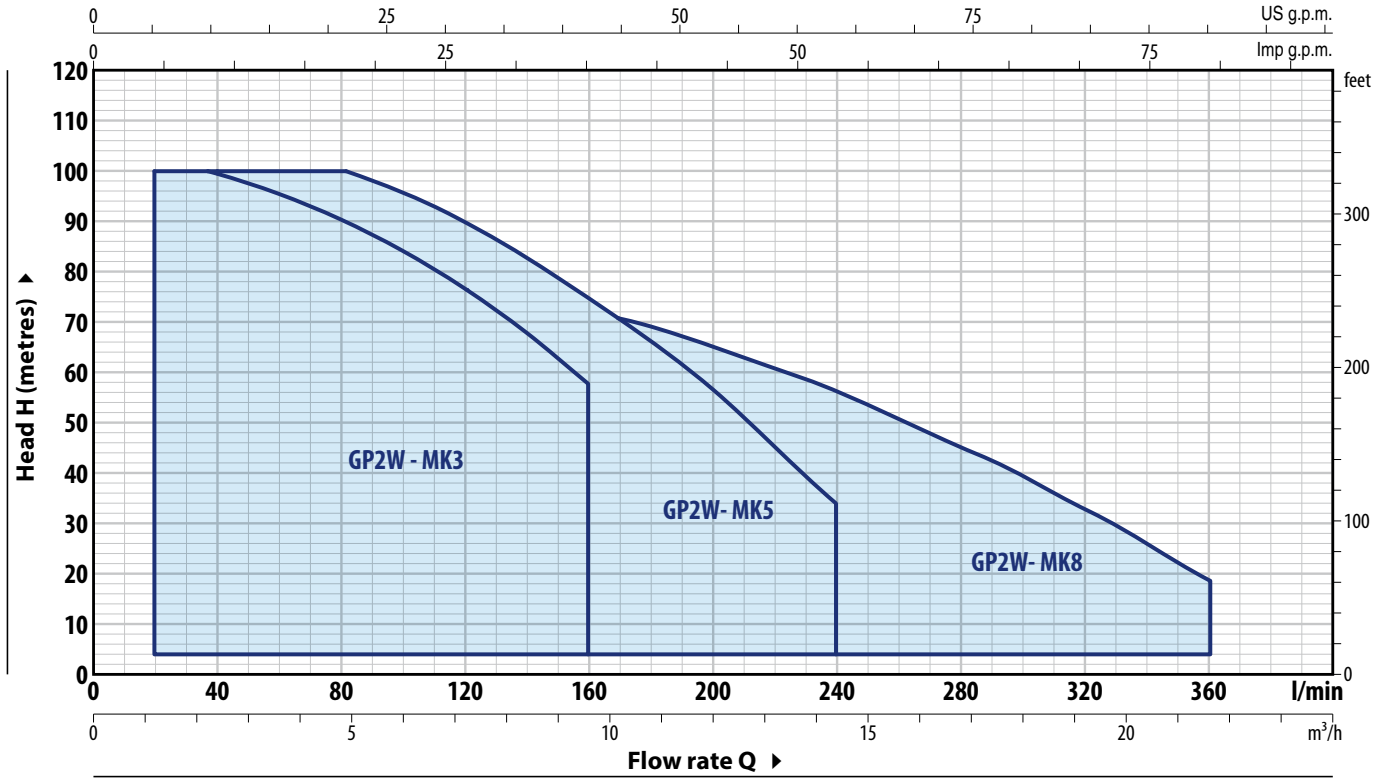

TYPE		POWER P2		Q m³/h	0	1.2	2.4	4.8	7.2	9.6	12.0	14.7	16.8	19.2	21.6
Single-phase	**Three-phase**	**kW**	**HP**	Q l/min	**0**	**20**	**40**	**80**	**120**	**160**	**200**	**240**	**280**	**320**	**360**
GP2Wm - MK 3/3	**GP2W - MK 3/3**	2x0.75	2x1	H metres	52.5	51.5	50	45	38.5	29					
GP2Wm - MK 3/5	**GP2W - MK 3/5**	2x1.1	2x1.5		87	85	83	75	64	48					
GP2Wm - MK 3/6	**GP2W - MK 3/6**	2x1.5	2x2		100	100	100	90	77	58					
GP2Wm - MK 5/4	**GP2W - MK 5/4**	2x0.75	2x1		57	–	54	50	45	37.5	28.5	17			
GP2Wm - MK 5/5	**GP2W - MK 5/5**	2x1.1	2x1.5		71	–	67.5	62.5	56	47	35.5	21.5			
GP2Wm - MK 5/7	**GP2W - MK 5/7**	2x1.5	2x2		99	–	95	88	78	66	50	30			
GP2Wm - MK 5/8	**GP2W - MK 5/8**	2x2.2	2x3		100	–	100	100	90	75	57	34			
GP2Wm - MK 8/4	**GP2W - MK 8/4**	2x1.1	2x1.5		56	–	–	53.5	51	47.5	43	37.5	30.5	22	12
GP2Wm - MK 8/5	**GP2W - MK 8/5**	2x1.5	2x2		70	–	–	67	64	59.5	54	47	38	27.5	15.5
GP2Wm - MK 8/6	**GP2W - MK 8/6**	2x2.2	2x3		84	–	–	80	77	72	64.5	56	45.5	33	18.5

Q = Flow rate **H** = Total manometric head

※ **The data shown in the diagram and tables indicate performance with 2 pumps in operation**

PERFORMANCE CURVES

50 Hz

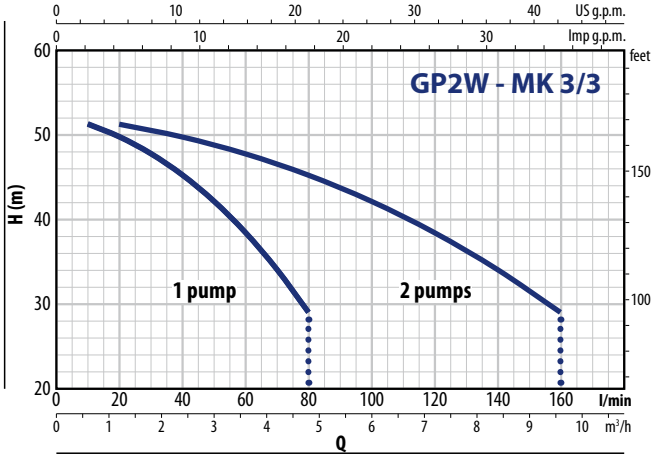

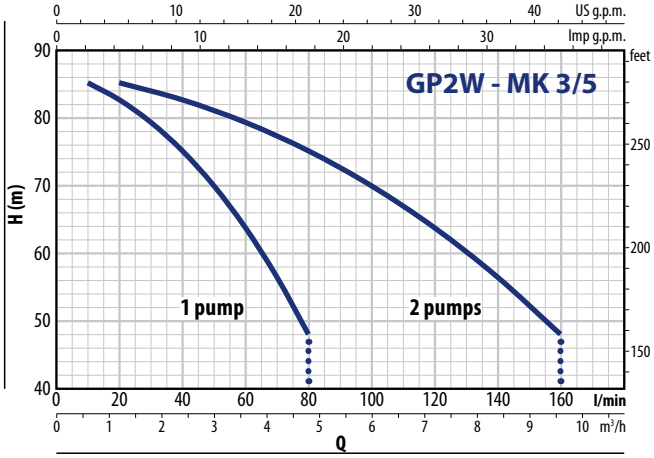

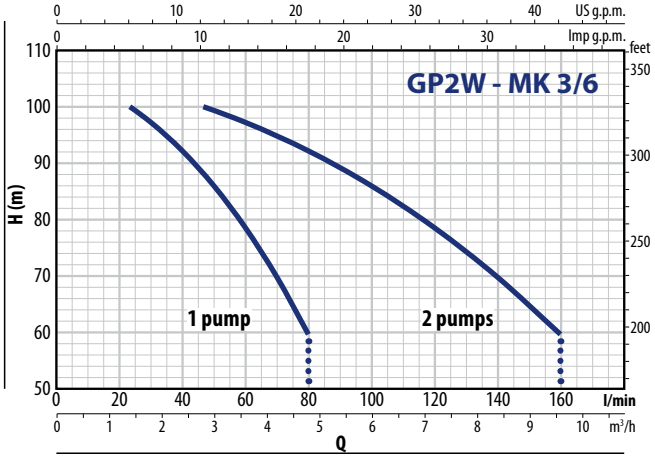

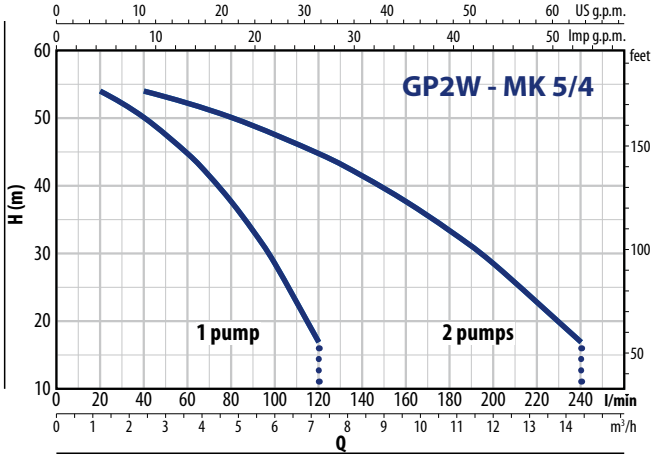

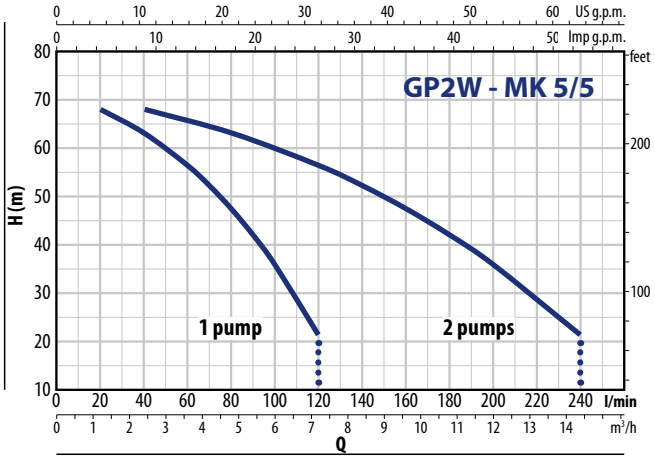

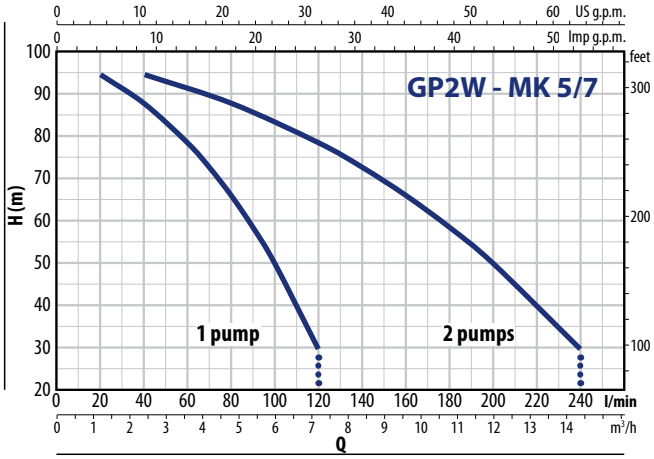

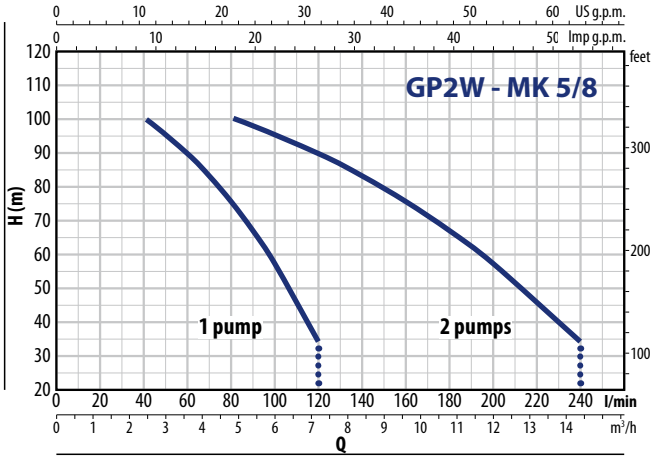

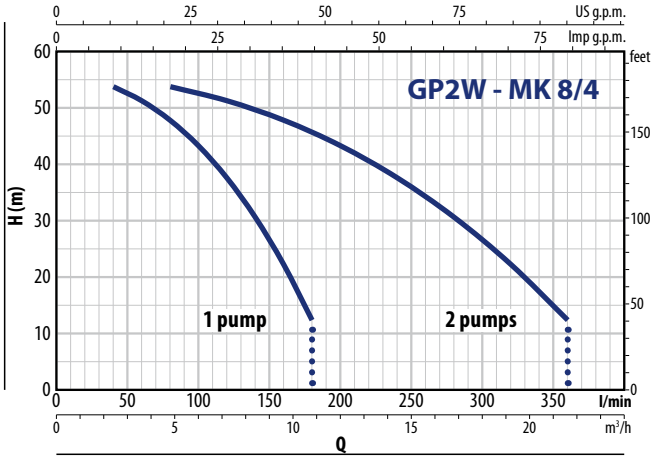

GP2W – MK

PERFORMANCE CURVES

50 Hz

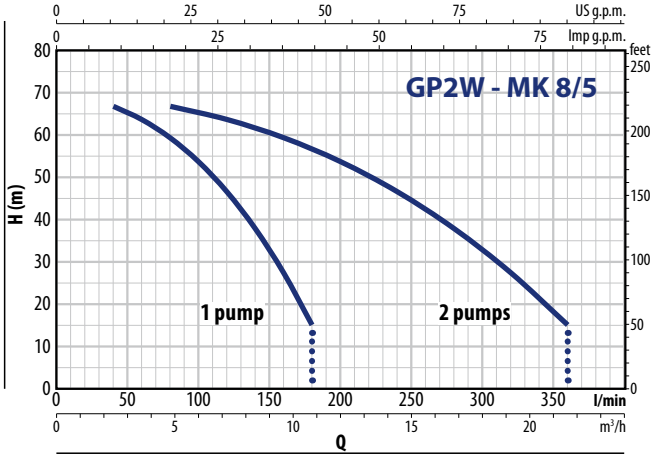

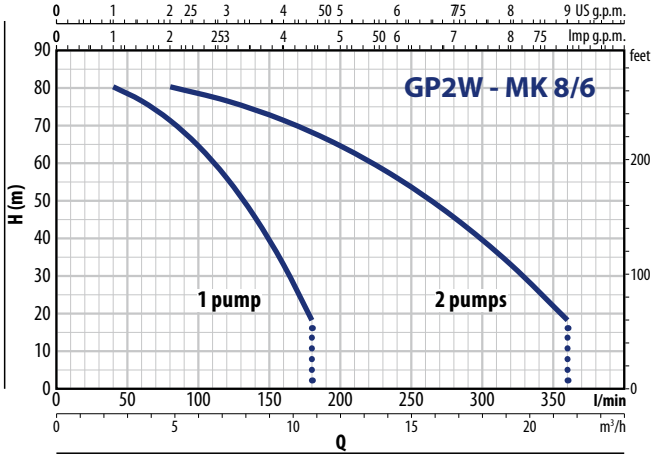

ABSORPTION

TYPE **Single-phase**	VOLTAGE **230 V**
GP2Wm - MK 3/3	2 x 9.0 A
GP2Wm - MK 3/5	2 x 12.5 A
GP2Wm - MK 3/6	2 x 14.0 A
GP2Wm - MK 5/4	2 x 9.0 A
GP2Wm - MK 5/5	2 x 11.0 A
GP2Wm - MK 5/7	2 x 13.5 A
GP2Wm - MK 5/8	2 x 16.0 A
GP2Wm - MK 8/4	2 x 12.5 A
GP2Wm - MK 8/5	2 x 14.0 A
GP2Wm - MK 8/6	2 x 18.0 A

TYPE **Three-phase**	VOLTAGE **400 V**
GP2W - MK 3/3	2 x 3.3 A
GP2W - MK 3/5	2 x 4.2 A
GP2W - MK 3/6	2 x 5.0 A
GP2W - MK 5/4	2 x 3.3 A
GP2W - MK 5/5	2 x 4.0 A
GP2W - MK 5/7	2 x 5.0 A
GP2W - MK 5/8	2 x 6.0 A
GP2W - MK 8/4	2 x 4.2 A
GP2W - MK 8/5	2 x 5.0 A
GP2W - MK 8/6	2 x 6.5 A

DIMENSIONS AND WEIGHT

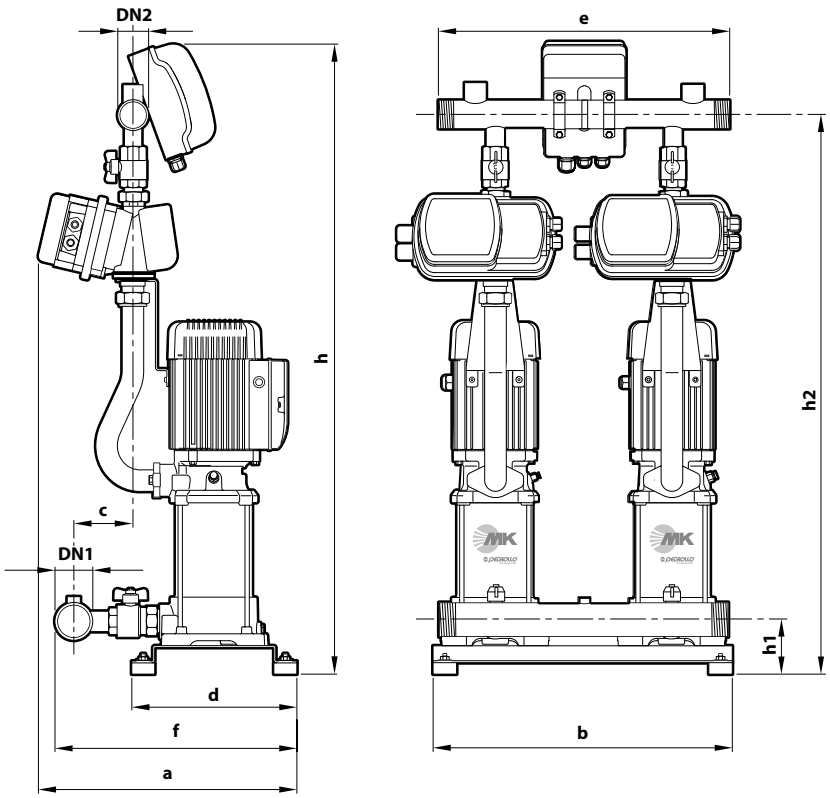

TYPE		PORTS		DIMENSIONS mm									kg	
Single-phase	**Three-phase**	DN1	DN2	a	b	c	d	e	f	h	h1	h2	1~	3~
GP2Wm - MK 3/3	**GP2W - MK 3/3**									965		842	80.0	79.0
GP2Wm - MK 3/5	**GP2W - MK 3/5**									1019		896	84.0	84.0
GP2Wm - MK 3/6	**GP2W - MK 3/6**									1046		923	88.0	87.0
GP2Wm - MK 5/4	**GP2W - MK 5/4**	**2"**	**1½"**			107			420	992		869	80.0	80.0
GP2Wm - MK 5/5	**GP2W - MK 5/5**									1019		896	83.0	83.0
GP2Wm - MK 5/7	**GP2W - MK 5/7**			447	510		284	500		1073	91	950	88.0	88.0
GP2Wm - MK 5/8	**GP2W - MK 5/8**									1100		977	89.0	88.0
GP2Wm - MK 8/4	**GP2W - MK 8/4**									992		869	86.0	86.0
GP2Wm - MK 8/5	**GP2W - MK 8/5**	**2½"**	**2"**			115			435	1019		896	87.0	86.0
GP2Wm - MK 8/6	**GP2W - MK 8/6**									1046		923	93.0	92.0

GP3W – MK

FIELD AND PERFORMANCE DATA

50 Hz

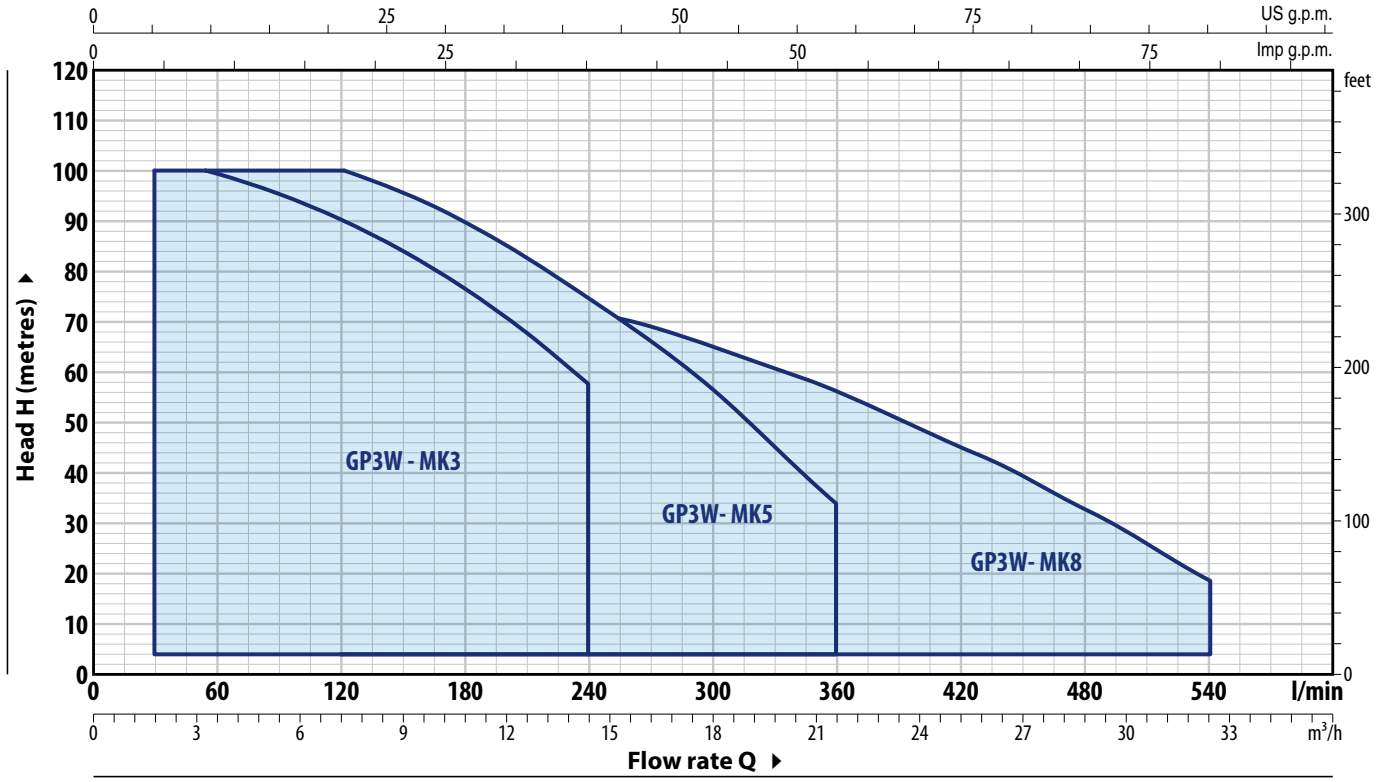

TYPE		POWER P2		Q m³/h	0	1.8	3.6	7.2	10.8	14.5	18.1	21.7	25.3	28.9	32.5
Single-phase	**Three-phase**	**kW**	**HP**	Q l/min	**0**	**30**	**60**	**120**	**180**	**240**	**300**	**360**	**420**	**480**	**540**
GP3Wm - MK 3/3	**GP3W - MK 3/3**	3x0.75	3x1	H metres	52.5	51.5	50	45	38.5	29					
GP3Wm - MK 3/5	**GP3W - MK 3/5**	3x1.1	3x1.5		87	85	83	75	64	48					
GP3Wm - MK 3/6	**GP3W - MK 3/6**	3x1.5	3x2		100	100	100	90	77	58					
GP3Wm - MK 5/4	**GP3W - MK 5/4**	3x0.75	3x1		57	–	54	50	45	37.5	28.5	17			
GP3Wm - MK 5/5	**GP3W - MK 5/5**	3x1.1	3x1.5		71	–	67.5	62.5	56	47	35.5	21.5			
GP3Wm - MK 5/7	**GP3W - MK 5/7**	3x1.5	3x2		99	–	95	88	78	66	50	30			
GP3Wm - MK 5/8	**GP3W - MK 5/8**	3x2.2	3x3		100	–	100	100	90	75	57	34			
GP3Wm - MK 8/4	**GP3W - MK 8/4**	3x1.1	3x2		56	–	–	53.5	51	47.5	43	37.5	30.5	22.1	12
GP3Wm - MK 8/5	**GP3W - MK 8/5**	3x1.5	3x2.5		70	–	–	67	64	59.5	54	47	38	27.5	15.5
GP3Wm - MK 8/6	**GP3W - MK 8/6**	3x2.2	3x3		84	–	–	80	77	72	64.5	56	45.5	33	18.5

Q = Flow rate **H** = Total manometric head

※ **The data shown in the diagram and tables indicate performance with 3 pumps in operation**

PERFORMANCE CURVES

50 Hz

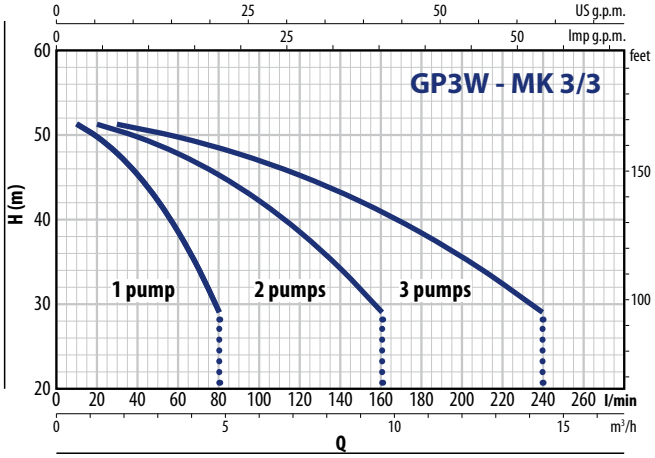

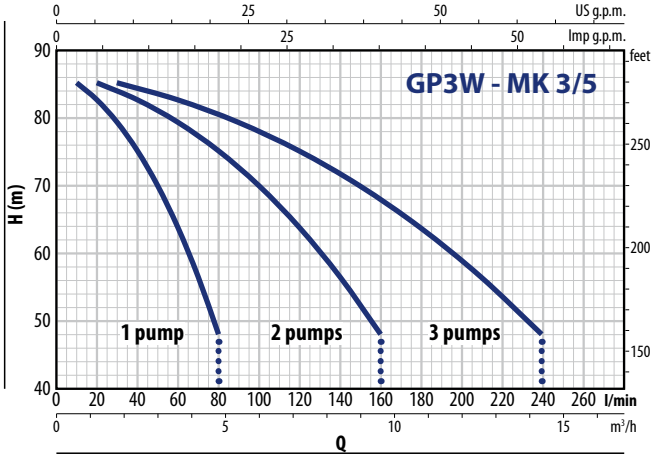

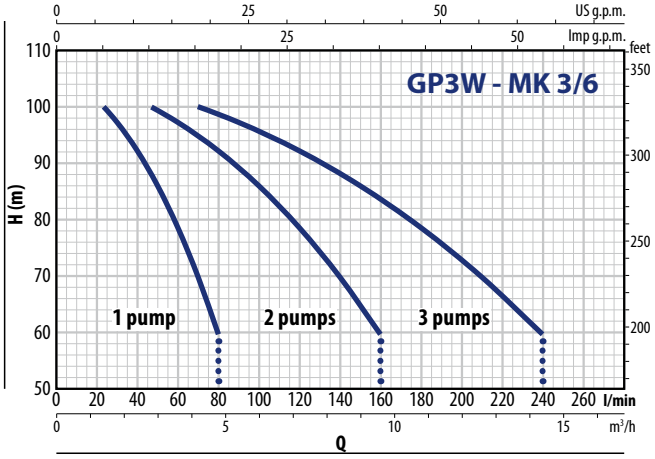

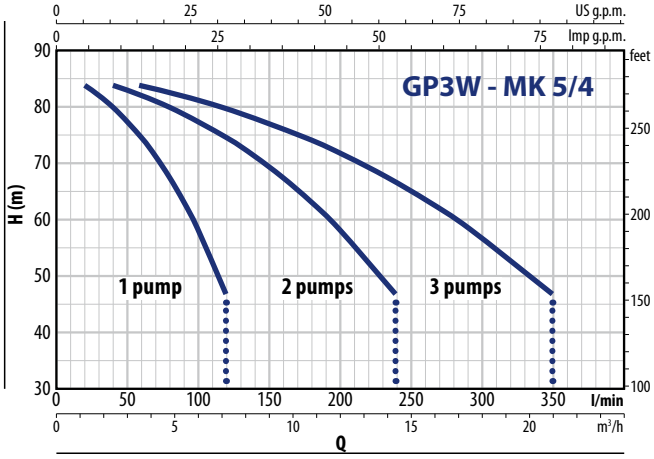

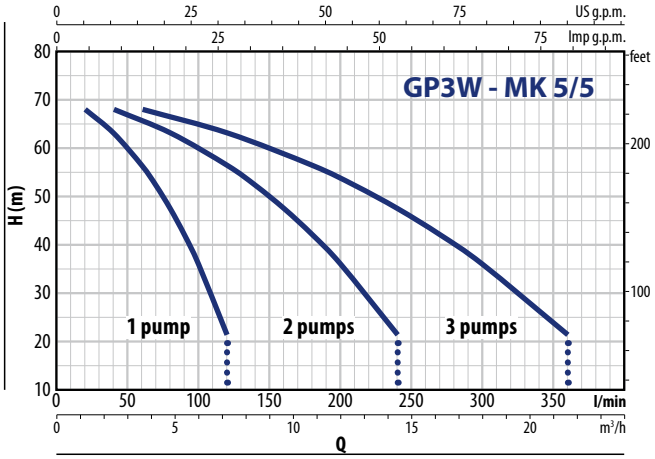

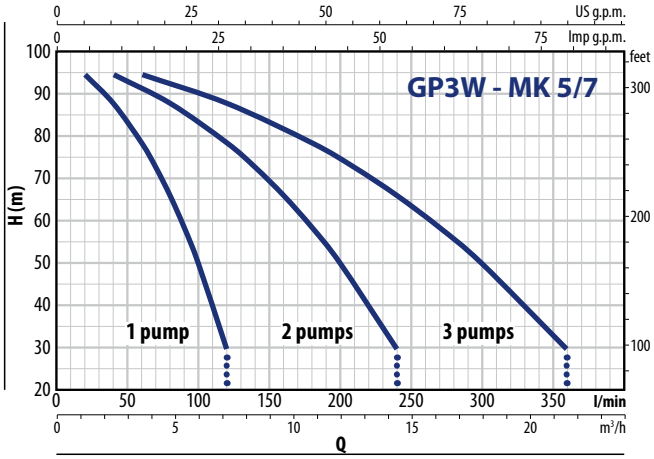

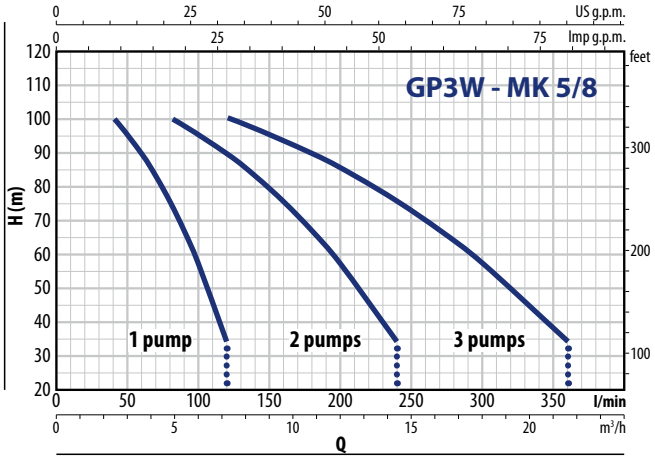

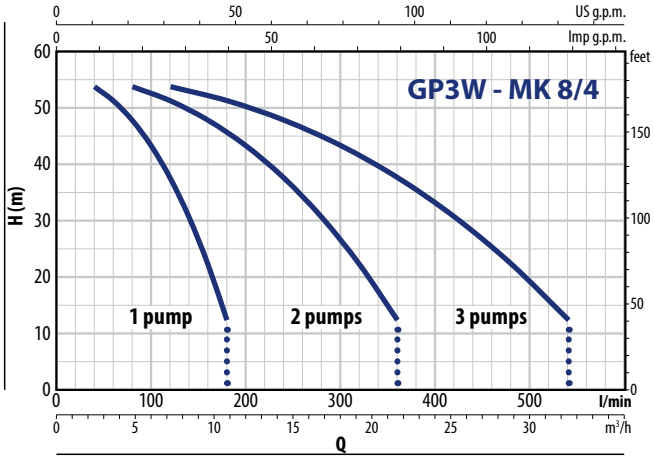

GP3W – MK

PERFORMANCE CURVES

50 Hz

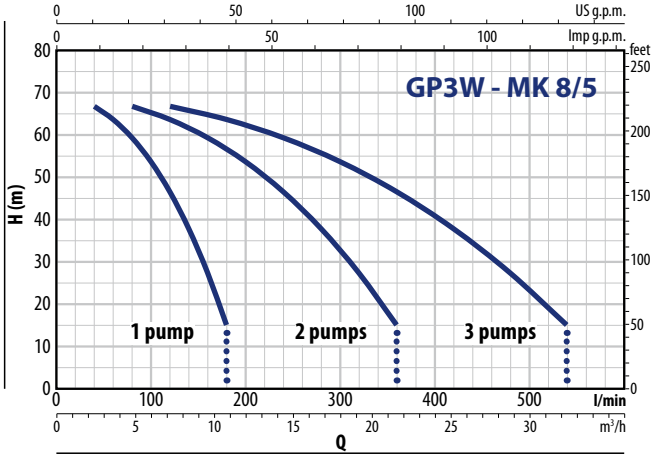

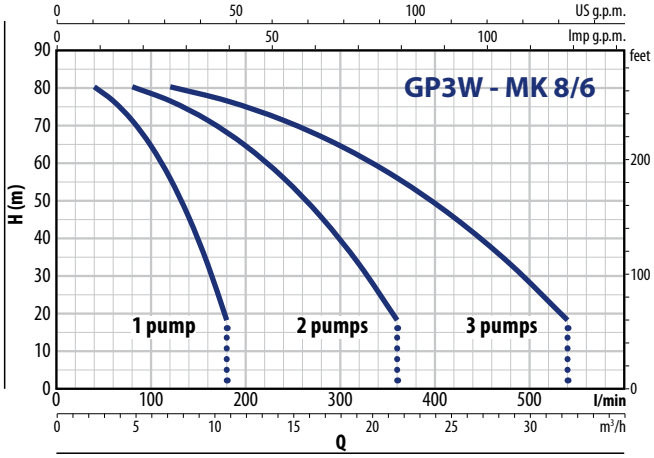

ABSORPTION

TYPE **Single-phase**	VOLTAGE **230 V**
GP3Wm - MK 3/3	3 x 9.0 A
GP3Wm - MK 3/5	3 x 12.5 A
GP3Wm - MK 3/6	3 x 14.0 A
GP3Wm - MK 5/4	3 x 9.0 A
GP3Wm - MK 5/5	3 x 11.0 A
GP3Wm - MK 5/7	3 x 13.5 A
GP3Wm - MK 5/8	3 x 16.0 A
GP3Wm - MK 8/4	3 x 12.5 A
GP3Wm - MK 8/5	3 x 14.0 A
GP3Wm - MK 8/6	3 x 18.0 A

TYPE **Three-phase**	VOLTAGE **400 V**
GP3W - MK 3/3	3 x 3.3 A
GP3W - MK 3/5	3 x 4.2 A
GP3W - MK 3/6	3 x 5.0 A
GP3W - MK 5/4	3 x 3.3 A
GP3W - MK 5/5	3 x 4.0 A
GP3W - MK 5/7	3 x 5.0 A
GP3W - MK 5/8	3 x 6.0 A
GP3W - MK 8/4	3 x 4.2 A
GP3W - MK 8/5	3 x 5.0 A
GP3W - MK 8/6	3 x 6.5 A

DIMENSIONS AND WEIGHT

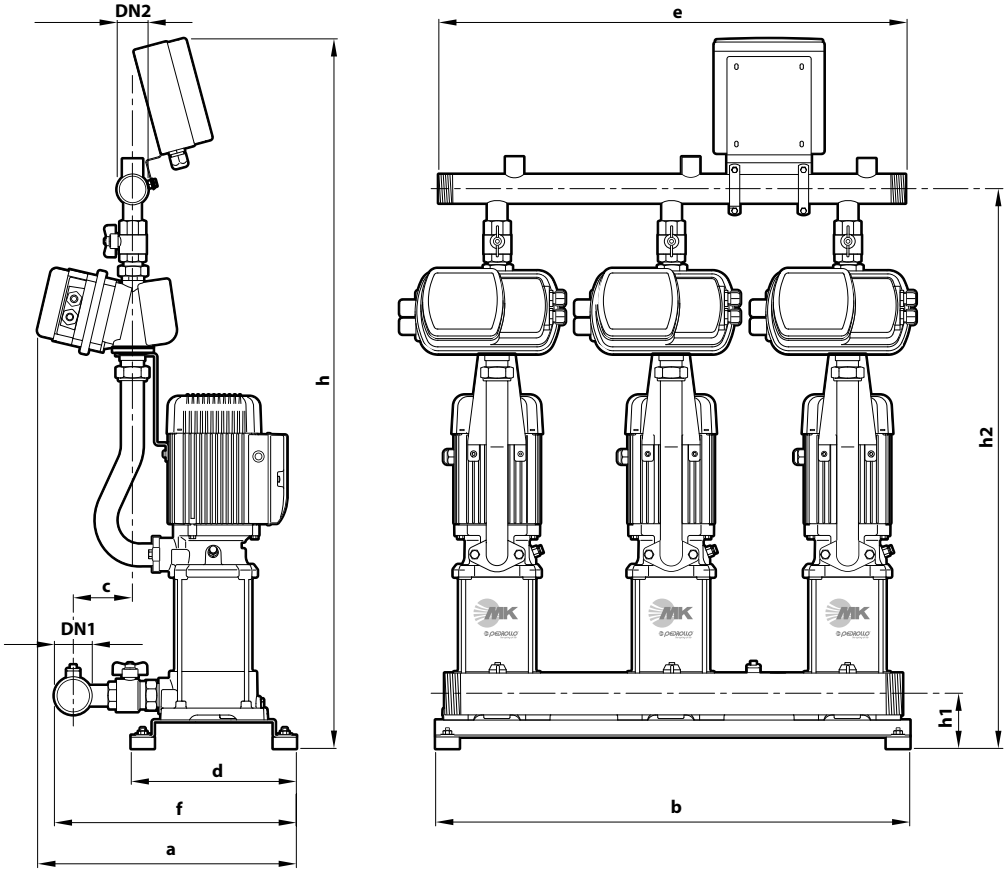

TYPE		PORTS		DIMENSIONS mm									kg	
Single-phase	**Three-phase**	DN1	DN2	a	b	c	d	e	f	h	h1	h2	1~	3~
GP3Wm - MK 3/3	**GP3W - MK 3/3**									1143		849	123.0	124.0
GP3Wm - MK 3/5	**GP3W - MK 3/5**									1197		876	130.0	130.0
GP3Wm - MK 3/6	**GP3W - MK 3/6**									1224		930	135.0	136.0
GP3Wm - MK 5/4	**GP3W - MK 5/4**									1170		876	124.0	125.0
GP3Wm - MK 5/5	**GP3W - MK 5/5**	**2½"**	**2"**	447	810	115	284	800	435	1197	91	903	129.0	130.0
GP3Wm - MK 5/7	**GP3W - MK 5/7**									1251		957	136.0	136.0
GP3Wm - MK 5/8	**GP3W - MK 5/8**									1278		984	140.0	140.0
GP3Wm - MK 8/4	**GP3W - MK 8/4**									1170		876	131.0	132.0
GP3Wm - MK 8/5	**GP3W - MK 8/5**									1197		903	132.0	133.0
GP3Wm - MK 8/6	**GP3W - MK 8/6**									1224		930	142.0	142.0

DHL Electronic circulators for heating systems

PERFORMANCE RANGE

- Flow rate up to **3.5 m³/h** (0.97 l/s)
- Head up to **6 m**

INSTALLATION AND USE

Energy-efficient, class A electronic circulators significantly reduce electricity use by up to 85% compared to traditional models with similar performance, making them an ideal choice for home and residential heating systems. These circulators feature advanced control electronics that allow for customizable functionality to meet the specific needs of various systems. Users can easily adjust and select the desired operating program directly from the user interface's controller, enhancing system efficiency and comfort by minimizing energy consumption and reducing water flow noise in pipes, valves, and radiators. For optimal performance, installation should be in well-ventilated, enclosed spaces or areas protected from the elements.

APPLICATION LIMITS

- Liquid temperature between **+2 °C** and **+95 °C**
- Ambient temperature between **0 °C** and **+40 °C**
- Maximum working pressure = **6 bar**.
- Minimum suction pressure:
  - **0.3 bar** to 50 °C
  - **1.0 bar** to 95 °C
- Maximum relative humidity **≤ 95%.**
- Sound pressure level < **43 db(A)**
- Glycol maximum **30%**
- Continuous running duty **S1**

COMPONENTS

1	**Pump body**	Cast iron with cataphoresis treatment
2	**Impeller**	Technopolymer
3	**Shaft**	Ceramic
4	**Bearings**	Graphite
5	**end thrust, thrust**	Ceramic
6	**Motor**	– Motor 230 V (-10%; +6%) - 50 Hz – Power consumption P1: min 3 W - max 42 W – Absorbed current I1: Min 0.03 A - Max 0.33 A – Insulation: class H – Protection rating: IP 44 – Appliance class: II
7	**Gaskets**	EPDM
8	**Circuit board**	

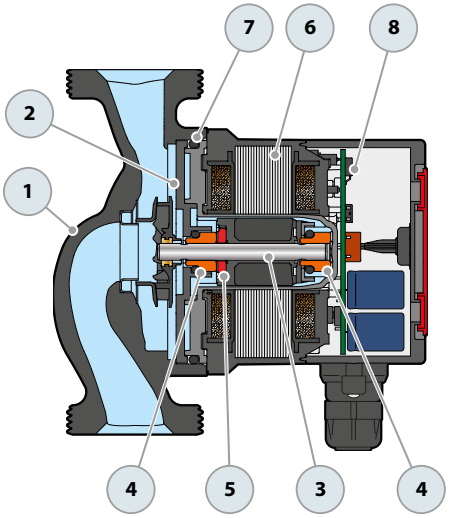

OPERATING MODE

The user interface enables users to select the optimal working curve for the circulator through three distinct programs. A bright LED indicator displays the circulator's operating status, with variations in illumination providing clear, at-a-glance information.

PROPORTIONAL PROGRAM

GREEN LED

This setting proportionally adjusts the pressure (head) based on the system's heat demand and desired flow rate

CONSTANT PROGRAM

ORANGE LED

This setting maintains a constant pressure level (head) according on the system's heat demand and desired flow rate.

CUSTOMISED PROGRAM

LED BLU

Allows the pump's speed to be set to a constant level, adjustable through a selector that can be positioned between the MIN and MAX settings to fine-tune performance.

An LED indicator on the user interface alerts to the potential presence of air in the system. Should this occur, the circulator's on-board electronics automatically engage a motor unlocking feature to resolve the issue.

WHITE LED
Presence of air in the system. Bleed the system

RED LED
The circulator is in a locked state but is still under power

DIMENSIONS AND WEIGHT

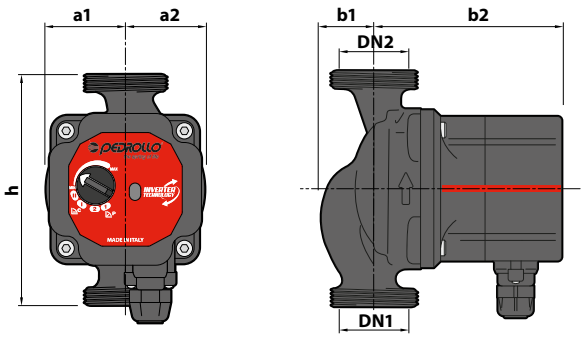

TYPE Single-phase	PORTS DN1	PORTS DN2	DIMENSIONS mm h	a1	a2	b1	b2	kg
DHL 25-60/130	G 1½	G 1½	130	45	45	29	104.2	2.01
DHL 25-60/180			180					2.60

PERFORMANCE CURVES P

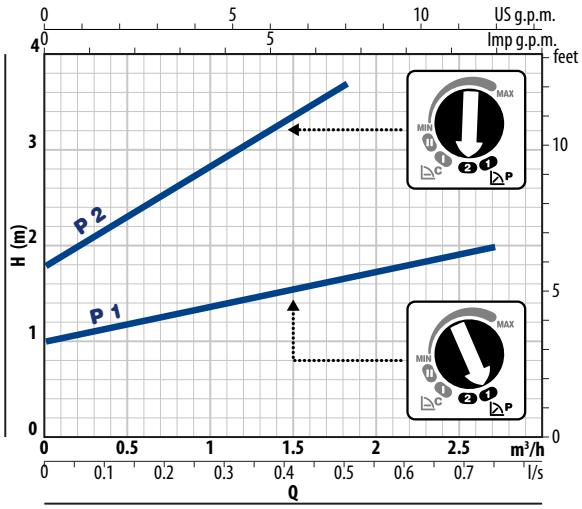

PERFORMANCE CURVES C

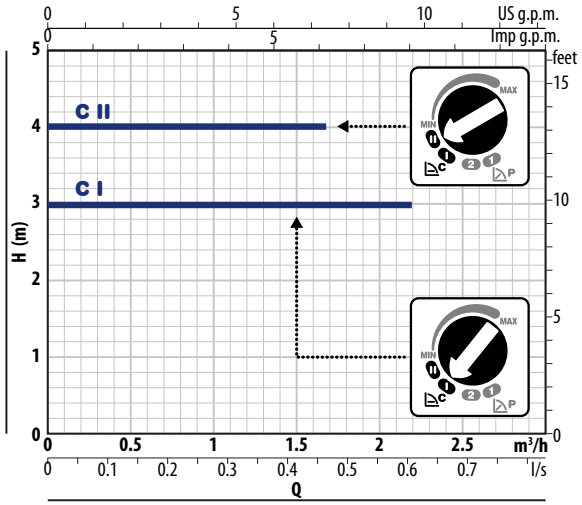

PERFORMANCE CURVES MIN – MAX

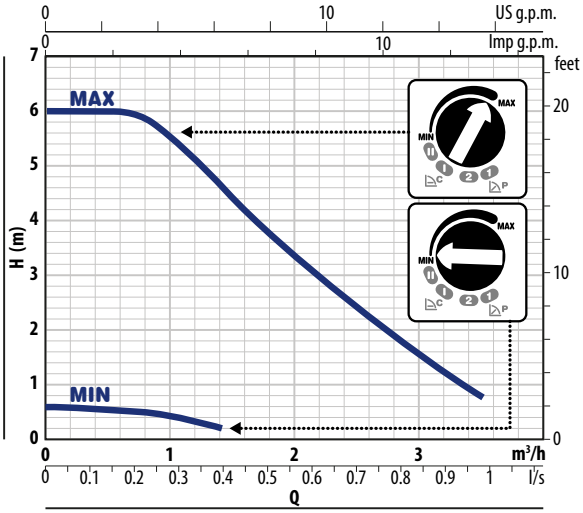

E1 - E2 Electronic control panels for pumps

INSTALLATION AND USE

E1/E2 are **multifunctional electronic control panels** designed to manage one or two pumps in residential, commercial, or industrial settings.
Thanks to their versatility, they provide protection and facilitate operations such as pressurization, filling, drainage, and emptying, accommodating both clean and wastewater applications.

PRODUCT DESCRIPTION

E1/E2 electronic control panels offer unmatched adaptability for various systems by featuring **six selectable operating modes**. These modes facilitate comprehensive pump management and protection through both analogue and digital inputs, alongside electrical parameter monitoring.

Equipped with an intuitive **keypad and LCD display**, the panels simplify programming and configuration of pump settings, protections, and operational modes through a user-friendly guided process.

These panels feature **dry-running protection**, managed through power factor (**cosφ**), current control, or by activating a float or level probe. The integrated self-learning Wizard simplifies the system initialization by automatically storing key electrical parameter values, ensuring a quick and straightforward setup.

When managing two pumps, the **E2** panel automatically switches between them, reducing wear and maximizing efficiency in their operation.

MAIN FEATURES

※ Power supply:
1~ 230V±15% (E1/E2 MONO)
3~ 400V±15% (E1/E2 TRI)

※ Frequency: **50/60 Hz**

※ door lock main isolating switch,

※ Motor and auxiliary circuit protection fuse

※ **ABS** outer container

※ **IP55** protection degree

※ Ambient temperature: **-5 °C ÷ +40 °C**

※ Relative humidity **50% at 40 °C**

INPUTS

E1/E2 electronic control panels allow pumps to be managed via analogue and digital inputs:

※ Pressure switches

※ Floats

※ Remote contacts

※ Run/stop floats

※ Level probes

※ Pressure transducers

CONTROLS

※ Minimum and maximum operating current control
※ Minimum and maximum supply voltage control
※ Input phase failure or inversion control

E1 Electronic control panel for one single pump

TYPE	VOLTAGE	CURRENT POWER (*)	FUSES PROTECTION
E1 MONO	1~ 230 V - 50/60 Hz	up to 18 A	20 A
E1 TRI/1	3~ 400 V - 50/60 Hz	up to 18 A	20 A
E1 TRI/2	3~ 400 V - 50/60 Hz	up to 25 A	32 A

(*) The rated current value refers to a single electric pump

E2 Electronic control panel for two pumps

TYPE	VOLTAGE	CURRENT POWER (*)	FUSES COVER
E2 MONO	1~ 230V - 50/60 Hz	up to 18 A	20 A
E2 TRI	3~ 400V - 50/60 Hz	up to 16 A	32 A

OPERATING MODE

MODE 1: DRAINING AND PRESSURIZING
Dry run protection via cosφ or current

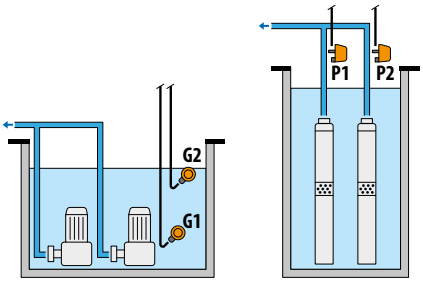

MODE 2: DRAINING AND PRESSURIZING
Dry run protection via level probes

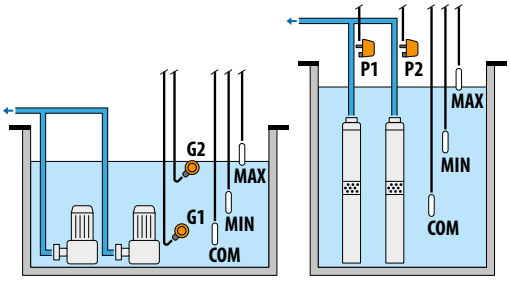

MODE 3: DRAINING
Dry run protection via minimum float switch

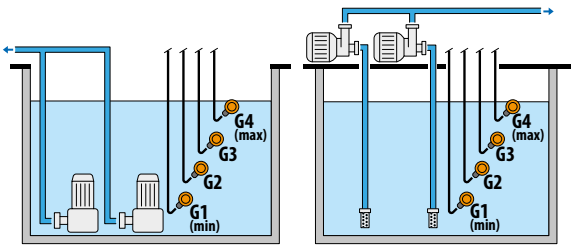

MODE 4: FILLING
Dry run protection via minimum float switch

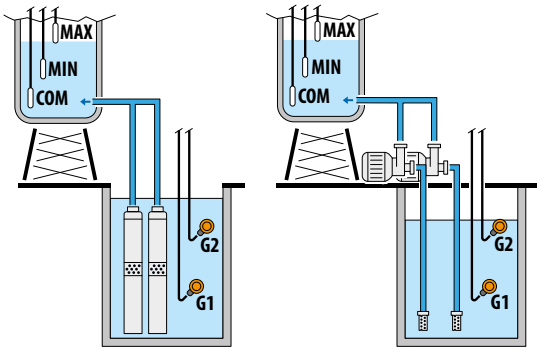

MODE 5: PRESSURIZING
Dry run protection via cosφ or current

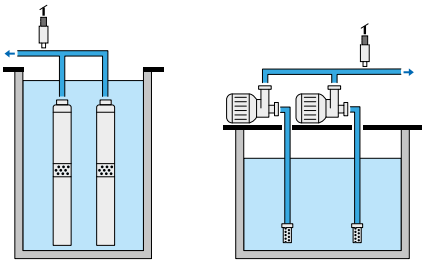

MODE 6: CUSTOMIZED:

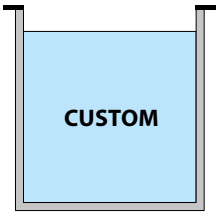

DIMENSIONS AND HOLE SPACING FOR MOUNTING

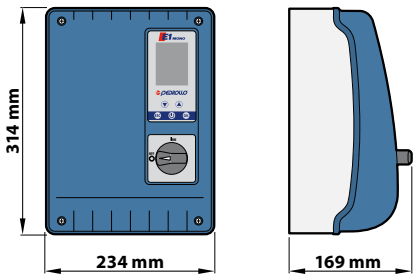

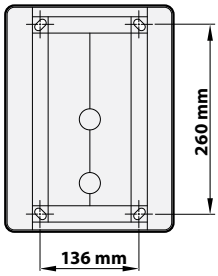

CONTROL PANELS

QEM/3 Control panel for 3" submersible pumps

TYPE	CODE	POWER MOTOR (P2)		CAPACITOR	CURRENT POWER
Single-phase		kW	HP	CAPACITY	A
QEM/3-050	530ECS305A1	0.37	**0.50**	12.5 µF	5
QEM/3-075	530ECS307A1	0.55	**0.75**	16 µF	6
QEM/3-100	530ECS310A1	0.75	**1**	20 µF	7
QEM/3-150	530ECS315A1	1.1	**1.5**	30 µF	10

※ Single-phase 230 V 50 Hz

QEM Control panel for 4" single-phase submersible pumps

TYPE	CODE	POWER MOTOR (P2)		CAPACITOR	CURRENT POWER
Single-phase		kW	HP	CAPACITY	A
QEM 050	530ECN05A1	0.37	**0.50**	20 µF	5
QEM 075	530ECN07A1	0.55	**0.75**	25 µF	6
QEM 100	530ECN10A1	0.75	**1**	35 µF	7
QEM 150	530EC15A1	1.1	**1.5**	40 µF	11
QEM 200	530ECN20A1	1.5	**2**	60 µF	13
QEM 300	530EC30A1	2.2	**3**	75 µF	18

※ Single-phase 230 V 50 Hz

QET Control panel for 3", 4" and 6" three-phase submersible pumps

TYPE	CODE	POWER MOTOR (P2)		CURRENT POWER
Three-phase		kW	HP	A
QET 050	530TNF05A	0.37	**0.50**	1.7
QET 075	530TNF07A	0.55	**0.75**	2
QET 100	530TNF10A	0.75	**1**	2.5
QET 150	530TNF15A	1.1	**1.5**	3.9
QET 200	530TNF20A	1.5	**2**	4.8
QET 300	530TNF30A	2.2	**3**	7
QET 400	530TNF40A	3	**4**	9
QET 550	530TNF55A	4	**5.5**	11.5
QET 750	530TNF75A	5.5	**7.5**	15.5
QET 1000	530AD100A	7.5	**10**	21.5
QET 1250	530AD125A	9.2	**12.5**	23.5
QET 1500	530AD150A	11	**15**	27.5
QET 2000	530AD200A	15	**20**	36
QET 2500	530AD250A	18.5	**25**	45
QET 3000	530AD300A	22	**30**	54
QET 4000	530AD400A	30	**40**	68
QET 5000	530AD500A	37	**50**	85

※ The control panel is equipped with a selector switch for manual or automatic operation with provision for connecting a float switch (or pressure switch, etc.).

※ Three-phase 400 V - 50 Hz

QSM Control panel 4" single-phase pumps with level probes

Probes indicator

TYPE	CODE	POWER MOTOR (P2)		CAPACITOR	CURRENT POWER
Single-phase		kW	HP	CAPACITY	A
QSM 050	530MFLCN05A1	0.37	**0.50**	20 µF	5
QSM 075	530MFLCN07A1	0.55	**0.75**	25 µF	6
QSM 100	530MFLCN10A1	0.75	**1**	35 µF	7
QSM 150	530MFLC15A1	1.1	**1.5**	40 µF	11
QSM 200	530MFLCN20A1	1.5	**2**	60 µF	13
QSM 300	530MFLC30A1	2.2	**3**	75 µF	18

※ The control panel features a selector switch allowing for either manual or automatic operation. It comes preconfigured to connect with devices like a float switch, pressure switch, or level probes, offering protection against the pump running dry.

※ **Single-phase 230 V 50 Hz**

QST Control panel for 3", 4" and 6" three-phase pumps with level probes

Probes indicator

TYPE	CODE	MOTOR POWER (P2)		CURRENT POWER
Three-phase		kW	HP	A
QST 50	530TFLC05A	0.37	**0.50**	1.7
QST 75	530TFLC07A	0.55	**0.75**	2
QST 100	530TFLC10A	0.75	**1**	2.5
QST 150	530TFLC15A	1.1	**1.5**	3.9
QST 200	530TFLC20A	1.5	**2**	4.8
QST 300	530TFLC30A	2.2	**3**	7
QST 400	530TFLC40A	3	**4**	9
QST 550	530TFLC55A	4	**5.5**	11.5
QST 750	530TFLC75A	5.5	**7.5**	15.5
QST 1000	530ADL100A	7.5	**10**	21.5
QST 1250	530ADL125A	9.2	**12.5**	23.5
QST 1500	530ADL150A	11	**15**	27.5
QST 2000	530ADL200A	15	**20**	36
QST 2500	530ADL250A	18.5	**25**	45
QST 3000	530ADL300A	22	**30**	54
QST 4000	530ADL400A	30	**40**	68
QST 5000	530ADL500A	37	**50**	85

※ The control panel features a selector switch allowing for either manual or automatic operation. It comes preconfigured to connect with devices like a float switch, pressure switch, or level probes, offering protection against the pump running dry.

※ Three-phase 400 V - 50 Hz

CONTROL PANELS

QES Control panel for three-phase drainage pumps

TYPE Three-phase	CODE	POWER MOTOR (P2) kW	 HP	CURRENT POWER A
QES 150	532QES150A	1.1	**1.5**	4.2
QES 200	532QES200A	1.5	**2**	5.2
QES 300	532QES300A	2.2	**3**	6.5
QES 400	532QES400A	3	**4**	8

※ The control panel features a selector switch allowing for either manual or automatic operation. It comes preconfigured to connect with devices like a float switch and the integrated thermal protector for VXC, VXC-F, MC, MC-F drainage pumps

※ **Three-phase 380 - 415V 50 Hz**

ALARM KIT Electronic control panel for SAR 250 and SAR 550

TYPE	CODE	VOLTAGE
ALARM KIT	KSKIT-ALARM	**single-phase 230V 50 Hz**

※ The panel contains an electronic board, a buffer battery to power the panel, a red flashing light and a 90 dB alarm siren at 1 m.

※ The panel is preconfigured for the connection of a float switch (included in the kit) that triggers the alarm when the contact is closed.

 ※ **Start of production new design 04.2024** ※

SF

SF - SPHERICAL TANK

TYPE	CODE	FITTING	CAPACITY	PALLET CAPACITY No. of tanks
24 SF	50011	1"	**24 litres**	**54**

※ Maximum operating pressure **8 bar** - Interchangeable butyl rubber diaphragm

CL

CL -CYLINDRICAL TANKS

TYPE	CODE	FITTING	CAPACITY	PALLET CAPACITY No. of tanks
24 CL	50012	1"	**20 litres**	**56**
60 CL	50031	1"	**60 litres**	**15**
100 CL	50032	1"	**100 litres**	**12**

※ Maximum operating pressure **10 bar** - Interchangeable butyl rubber diaphragm

VT

VT - VERTICAL TANKS

TYPE	CODE	FITTING	CAPACITY	PALLET CAPACITY No. of tanks
8 VT	50051	1"	**8 litres**	**189**
19 VT	50052	1"	**19 litres**	**63**
60 VT	50040	1"	**60 litres**	**15**
100 VT	50041	1"	**100 litres**	**12**
200 VT	50042	1½"	**200 litres**	**6**
300 VT	50043	1½"	**300 litres**	**6**

※ Maximum operating pressure **10 bar (8 bar** for 8VT, 19VT) - Interchangeable butyl rubber diaphragm

REPLACEMENT MEMBRANE

24 SF	CODE 50019
24 CL	CODE 50019
60 CL	CODE 5001960
100 CL	CODE 50019100

REPLACEMENT MEMBRANE

8 VT	CODE 5001905/8
19 VT	CODE 50019
60 VT	CODE 5001960
100 VT	CODE 50019100
200 VT	CODE 50019200C
300 VT	CODE 50019300

05SF

1SF

SF - *SPHERICAL TANKS WITH FIXED MEMBRANE*

TYPE	CODE	FITTING	CAPACITY
05SF 0.5	500570045	½"	**½ litre**
05SF 1.0	500570090	1"	**½ litre**
1SF 0.5	50057005	½"	**1 litre**
1SF 1.0	50057010	1"	**1 litre**

※ Maximum operating pressure **10 bar**
※ Start of production: 03.2024 for 1SF – 07.2024 for 05SF

ACCESSORIES

ROUND TANK KIT

KSP-24

TYPE	CODE
KSP-24 ※ **24-litre** round tank ※ Pressure gauge **0 - 6 bar**. ※ 5-way fitting - G 1" ※ Pressure switch '**PSG-1**	50008SP24
KSD-24 ※ **24-litre** round tank ※ Pressure gauge **0 - 6 bar**. ※ 5-way fitting - G 1" ※ Pressure switch '**FSG2**	50010

CYLINDER KITS

KCP-24

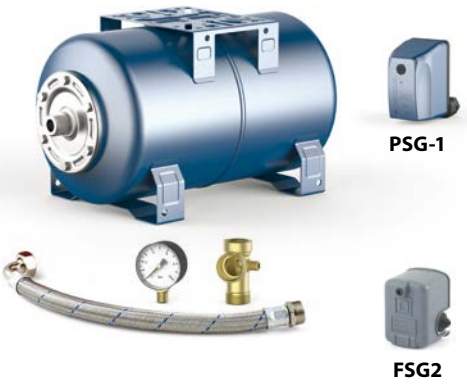

TYPE	CODE
KCP-24 ※ **20-litres** cylindrical tank ※ Pressure gauge **0 - 6 bar**. ※ 5-way fitting - G 1" ※ Hose G 1" (**500 mm**) ※ Pressure switch '**PSG-1**	50008CP24
KCD-24 ※ **20-litre** cylindrical tank ※ Pressure gauge **0 - 6 bar.** ※ 5-way fitting - G 1" ※ Hose G 1" **(500 mm)** ※ Pressure switch '**FSG2**	50009

KCP-60

TYPE	CODE
KCP-60 ※ **60-litre** cylindrical tank ※ Pressure gauge **0 - 6 bar**. ※ 5-way fitting - G 1" ※ Hose G 1" (**600 mm**) ※ Pressure switch'**PSG-1**	50008CP60
KCD-60 ※ **60-litre** cylindrical tank ※ Pressure gauge **0 - 6 bar.** ※ 5-way fitting - G 1" ※ Hose G 1" **(600 mm)** ※ Pressure switch '**FSG2**	50009/67

ACCESSORIES FOR ELECTRIC SUBMERSIBLE PUMPS

TYPE	CODE	CABLE DIAMETER	CABLE WEIGHT	TENSILE STRENGTH
SAFETY CABLE (in polypropylene)	116310	**Ø 8 mm**	30 gr/m	960 kg
	116311	**Ø 10 mm**	45 gr/m	1425 Kg
	116312	**Ø 12 mm**	65 gr/m	2030 kg
	116313	**Ø 14 mm**	90 gr/m	2790 kg
	116314	**Ø 16 mm**	115 gr/m	3500 kg

※ Twisted cable made of UV-stabilised polypropylene yarn
※ Maximum available reel length: 220 metres

SAFETY CABLE (AISI 316 stainless steel)	116305	**Ø 5 mm**	100 gr/m	1500 kg

※ 49 wire cable in AISI 316 stainless steel
※ Maximum available reel length: 250 metres

STRAIGHT SHACKLE WITH PIN (For **8 mm** cable) (in **AISI 316** stainless steel)	CODE 1160305

5 mm CABLE CLAMP (in **AISI 316** stainless steel)	CODE 1160304

FLOAT SWITCHES

TYPE	CODE		LENGTH
	CABLE = **H07 RN - F**	**PVC** CABLE	
0315/3	50014H	50014	**3 metres**
0315/5	500145H	500145	**5 metres**
0315/10	5001410H	5001410	**10 metres**

※ With cable **H07 RN-F**: single function (emptying), with 10 A switch
※ With cable **PVC**: dual function (emptying and filling), with 10 A switch

T 80/3	50014/1H	50014/1	**3 metres**
T 80/5	50014/5H	50014/5	**5 metres**
T 80/10	50014/10H	50014/10	**10 metres**

※ With **H07 RN-F** cable: single-function (emptying), double sealed float switches, with 10 A switch
※ With **PVC** cable: dual-function (emptying and filling), double sealed float switches, with 10 A switch

SMALL 3	50014S4	50014S3	**3 metres**
SMALL 5	50014S5	50014S51	**5 metres**

※ With **H07 RN-F** cable: single-function (emptying), double sealed float switches, with 10 A switch
※ With **PVC** cable: dual-function (emptying and filling), double sealed float switches, with 10 A switch

TYPE	CODE	CABLE	LENGTH
MAC 5	54SARGL001	PVC	10 **metres**

※ Tilting float: dual function (emptying and filling), double sealed protection chamber, with 10 A switch
※ Recommended for Waste Water Recovery Stations (SAR)

ACCESSORIES

AIRFLO - AIR FEEDERS

TYPE	CODE	TANK CAPACITY
AIRFLO 1	50021	100 + 500 litres
AIRFLO 2	50022	750 + 2000 litres

※ Air feeders suitable for maintaining the air cushion in autoclave tanks without a membrane.

NA *- 3-WAY NIPPLE FOR AIR FEEDERS*

TYPE	CODE	FITTING	DOUBLE CENTRAL ATTACK
NA < 1.00	50023	**1" x 1"**	½" x ¼" (male/female)
NA < 1.25	50023/1	**1¼" x 1¼"**	½" x ¼" (male/female)
NA < 1.50	50023/2	**1½" x 1½"**	½" x ¼" (male/female)
NA < 2.00	50023/3	**2" x 2"**	½" x ¼" (male/female)

※ 3-way brass fittings for air supply connections (AIRFLO)

PRESSURE SWITCHES

PSG

FSG

TYPE	CODE	FITTING	CALIBRATION (*)
PSG-1	50018/8	**¼" Female**	**1.4 – 2.8 bar**
PSG-1M	50018/8M	**¼" Male**	**1.4 – 2.8 bar**
FSG 2	50018	**¼" Female**	**1.4 – 2.8 bar**
FYG 22	50018/1	**¼" Female**	**5.4 – 7.0 bar**
FYG 32	50018/2	**¼" Female**	**8 – 10.5 bar**
PT/5 SK (Three-phase)	50018/8T	**¼" Female**	**1.4 – 2.8 bar**

※ **PSG** registered Community model no. 002248955
(*) Adjustable

PRESSURE GAUGES

MC

MR

MCG

MRG

TYPE	CODE	FITTING	DIAMETER	SCALE
MC 6	50015/2	**¼"** - central	**50 mm**	0 – **6 bar**
MR 6	50015	**¼"** - radial	**63 mm**	0 – **6 bar**
MR 10	50015/0	**¼"** - radial	**63 mm**	0 – **10 bar**

GLYCERINE BATH PRESSURE GAUGES

TYPE	CODE	FITTING	DIAMETER	SCALE
MCG 6	50015/2G	**¼"** - central	**50 mm**	0 – **6 bar**
MRG 6	50015G	**¼"** - radial	**63 mm**	0 – **6 bar**
MRG 10	50015/0G	**¼"** - radial	**63 mm**	0 – **10 bar**

FITTINGS 3-5 WAYS

TYPE	CODE	FITTING
R 3 - 3 vie	50017	**1"**
R 4 - 4 vie	50016V8	**1"**
R 5 - 5 vie	50016	**1"**

※ **R 3**: three-way brass fitting with **G 1"** connections
※ **R 4**: four-way brass fitting with **G ½"** and **G ¼"** connections
※ **R 5**: five-way brass fitting with **G 1"** and **G ¼"** connections

HOSES

TYPE	CODE	TUBE	FITTINGS	LENGTH
TF 5	50013	**1"**	**1" x 1"**	**500 mm**
TF 6	50013/1	**1"**	**1" x 1"**	**600 mm**
TF 10	50013/6	**1"**	**1" x 1"**	**1000 mm**

※ EPDM rubber hoses
※ Maximum operating pressure **10 bar**

HOSES COMPLETE WITH ELBOW

TYPE	CODE	TUBE	FITTINGS	LENGTH
TFG 5	50013/01	**¾"**	**1" x 1"**	**500 mm**
TFG 6	50013/10	**1"**	**1" x 1"**	**600 mm**

※ EPDM rubber hoses
※ Maximum operating pressure **10 bar**

QUICK RELEASE COUPLINGS

TYPE	CODE	Hose connector diameter	Male union thread
FASTFIT 1.25	5027125	**Ø 32 mm**	**1¼"**
FASTFIT 1.5	5027150	**Ø 38 mm**	**1½"**
FASTFIT 2	5027200	**Ø 50 mm**	**2"**
FASTFIT 3	5027300	**Ø 75 mm**	**3"**

※ CAMLOCK polypropylene quick release coupling kit: - n.1 female coupling with hose connector - n.1 male coupling with male thread

HOSE FITTINGS

TYPE	CODE	RUBBER HOLDER	THREADED CONNECTOR
RP 0.75	50210	**Ø 25 mm**	**¾"**
RP 1	50211	**Ø 30 mm**	**1"**
RP 1.25	50212	**Ø 35 mm**	**1¼"**
RP 1.5	50213	**Ø 40 mm**	**1½"**
RP 2	50214	**Ø 50 mm**	**2"**
RPG 0.75	50220	**Ø 25 mm**	**¾"**
RPG 1	50221	**Ø 30 mm**	**1"**
RPG 1.25	50222	**Ø 35 mm**	**1¼"**
RPG 1.5	50223	**Ø 40 mm**	**1½"**
RPG 2	50224	**Ø 50 mm**	**2"**

※ Nylon fittings

ACCESSORIES

VF - *FOOT VALVES*

TYPE	CODE	FITTING
VF 0.5	50100	**½"**
VF 0.75	50101	**¾"**
VF 1	50102	**1"**
VF 1.25	50103	**1¼"**
VF 1.5	50104	**1½"**
VF 2	50105	**2"**

※ Brass foot valves with stainless steel suction filter

VR - *CHECK VALVES*

TYPE	CODE	FITTINGS
VR 0.5	50110	**½"**
VR 0.75	50111	**¾"**
VR 1	50112	**1"**
VR 1.25	50113	**1¼"**
VR 1.5	50114	**1½"**
VR 2	50115	**2"**

※ Brass check valves

VR-FT - *BALL CHECK VALVES*

TYPE	CODE	FITTINGS
VR-FT 1.25	501201	**1¼"**
VR-FT 1.5	501202	**1½"**
VR-FT 2	501203	**2"**

※ Check valves for submersible pumps (sewage)
※ Max. operating pressure **16 bar**
※ Min. operating pressure **0.3 bar**
※ Operating temperature 0 °C - **+80 °C**

VR-FF - *BALL CHECK VALVES*

TYPE	CODE	FITTINGS
VR-FF/DN 65 - FLANGED	501210	**DN 65** (PN16) **2½"**
VR-FF/DN 80 - FLANGED	501212	**DN 65** (PN16) **2½"**
VR-FF/DN 100 - FLANGED	501214	**DN 65** (PN16) **2½"**

※ Check valves for submersible pumps (sewage).
※ Max. operating pressure **16 bar**
※ Min. operating pressure **0.3 bar**
※ Operating temperature 0 °C - **+80 °C**

SCHUKO SOCKET WITH PROTECTIVE SHELLS

TYPE	CODE
PSC	117985

※ Water and dust protection with IP 65 or IP 67 rating
※ Mechanical protection from tearing

ELECTRIC CABLES FOR ELECTRIC SUBMERSIBLE PUMPS

TYPE	CODE	TYPE	WEIGHT PER METRE
4 x 1 mm²	117G100AN	H07 RN-F	0.165 kg
4 x 1.5 mm²	117G150AN	H07 RN-F	0.205 kg
4 x 2.5 mm²	117G200AN	H07 RN-F	0.290 kg
4 x 4 mm²	117G250AN	H07 RN-F	0.420 kg
4 x 6 mm²	117G300AN	H07 RN-F	0.505 kg
4 x 10 mm²	117G350AN	H07 RN-F	1.030 Kg
4 x 16 mm²	117G400AN	H07 RN-F	2.050 Kg

CABLES WITH PLUG

TYPE	CODE	CABLE SECTION	LENGTH	PLUG
H05 VV-F (PVC)	117FGA21G	**3 x 0.75 mm²**	150 cm	SCHUKO
H07 RN-F (NEOPRENE)	117GLA21G	**3 x 1 mm²**	150 cm	SCHUKO

ELECTRICAL CABLES FOR PHOTOVOLTAIC SYSTEMS

FG21M21 TYPE	CODE	WEIGHT PER METRE
1 x **4 mm²** colour red	117SF104R	0.060 kg
1 x **4 mm²** colour black	117SF104N	0.060 kg
1 x **6 mm²** colour red	117SF106R	0.080 kg
1 x **6 mm²** colour black	117SF106N	0.080 kg

ACCESSORIES

F - *FILTER HOLDER WITH PLASTIC HEADER*

TYPE	CODE	THREADED FITTINGS	HEIGHT CARTRIDGE
MEDIUM - F 0.75	504F075M	**¾"**	5"
MEDIUM - F 1	504F100M	**1"**	5"
JUNIOR - F 0.75	504F075J	**¾"**	7"
JUNIOR - F 1	504F100J	**1"**	7"
SENIOR - F 0.75	504F075S	**¾"**	10"
SENIOR - F 1	504F100S	**1"**	10"

※ Maximum operating pressure **5 bar** (at **+20 °C**)
※ Maximum temperature + **45 °C (at 2 bar pressure**)

SPANNER FOR DISASSEMBLY OF F-HOLDER CONTAINER

(code: 504KNPP)

RL - *POLYESTER FILTER CARTRIDGES*

TYPE	CODE	FILTRATION	HEIGHT CARTRIDGE	TYPE FILTER HOUSING
RL 5	504C05	50 µ	5"	MEDIUM **F**
RL 7	504C07	50 µ	7"	JUNIOR **F**
RL 10	504C10	50 µ	10"	SENIOR **F**

FA - *POLYPROPYLENE FILTER CARTRIDGES*

TYPE	CODE	FILTRATION	HEIGHT CARTRIDGE	TYPE FILTER HOUSING
FA 5	504F05	50 µ	5"	MEDIUM **F**
FA 7	504F07	50 µ	7"	JUNIOR **F**
FA 10	504F10	50 µ	10"	SENIOR **F**

HA - *FILTER CARTRIDGE WITH POLYPHOSPHATE CRYSTALS*

TYPE	CODE	HEIGHT CARTRIDGE	TYPE FILTER HOUSING
HA 10	504F08	10"	SENIOR **F**

LA - *ACTIVATED CARBON FILTER*

TYPE	CODE	HEIGHT CARTRIDGE	TYPE FILTER HOUSING
LA 10 BX	504LA10BX	10"	SENIOR **F**

GARDEN KIT - *FLEXIBLE SUCTION HOSE*

TYPE	CODE	FITTING	LENGTH
GARDEN KIT	50200	**1"**	7 metres

※ Flexible hose, complete with foot valve

TEFLON FOR HYDRAULIC JOINTS

TYPE	CODE	LENGTH	TAPE WIDTH
TFN 1	14TFN/1	**12 m**	**12 mm**
TFN 2	14TFN/21	**30 m**	**12 mm**
TFN 3	14TFN/3	**12 m**	**19 mm**

SPRAY CAN

TYPE	CODE	COLOUR	CAPACITY
SPRAY PAINT 1	120200A/2	**Pedrollo blue**	400 ml

※ **RECOMMENDED**

CAST RESIN CABLE JOINTING KIT

TYPE	CODE	NUMBER CONDUCTORS	SECTION CABLES	INSIDE DIAMETER FITTING
RPS 1	530GT3M82A1	4	**1 – 4 mm²**	**Ø 38 mm**
RPS 2	530GT3M82A2	4	**1 – 10 mm²**	**Ø 32 mm**
RPS 3	530GT3M92A1	4	**6 – 16 mm²**	**Ø 36 mm**

※ **ECONOMICAL**

HEAT SHRINKABLE CABLE SPLICE KIT

TYPE	CODE	NUMBER CONDUCTORS	SECTION CABLES
GPS 1	530GT3MGPS1	4	**1 - 2.5 mm²**
GPS 2	530GT3MGPS2	4	**4 – 6 mm²**

BEARINGS FOR PUMPS AND MOTORS

TYPE	CODE	DIMENSIONS
6201 ZZ	113001	12 x 32 x **10 mm**
6201 ZZ - C3E	113001C3E	12 x 32 x **10 mm**
6201 2RS - C3	113001SC3E	12 x 32 x **10 mm**
6202 ZZ - C3	113012	15 x 35 x **11 mm**
6203	113002A	17 x 40 x **12 mm**
6203 ZZ	113002	17 x 40 x **12 mm**
6203 ZZ - C3E	113002C3E	17 x 40 x **12 mm**
6203 2RS - C3E	113002RC3E	17 x 40 x **12 mm**
6204 ZZ - C3	113003C3E	20 x 47 x **14 mm**
6204 ZZ - C3E	113003	20 x 47 x **14 mm**
6204 2RS - C3E	113004RC3E	20 x 47 x **14 mm**
6205 ZZ	113004	25 x 52 x **15 mm**
6206 ZZ - C3	113005C3E	30 x 62 x **16 mm**
6208 ZZ - C3	113008	40 x 80 x **18 mm**
6003 ZZ - C3	113010	17 x 35 x **10 mm**
6212 ZZ - C3	113020	60 x 110 x **22 mm**
6302	1130145	15 x 42 x **13 mm**
6303 2RS - C3	113014SC3	17 x 47 x **14 mm**
6304 ZZ	113013	20 x 52 x **15 mm**
6304 ZZ - C3	113013C3E	20 x 52 x **15 mm**
6304 2RS - C3	113013SC3	20 x 52 x **15 mm**
6305	113043	25 x 62 x **17 mm**
6306 ZZ - C3	113015	30 x 72 x **19 mm**
6307 ZZ - C3	113017	35 x 80 x **21 mm**
6308 ZZ - C3	113018	40 x 90 x **23 mm**
6308 2RS - C3	113025	40 x 90 x **23 mm**
6309 ZZ - C3	1130185	45 x 100 x **25 mm**
6310 ZZ - C3	113019	50 x 110 x **27 mm**
6312 ZZ - C3	113021	60 x 130 x **31 mm**
6313 ZZ - C3	113023	65 x 140 x **33 mm**
6314 ZZ - C3	113024	70 x 150 x **35 mm**
3203 B 2RS - C3	113040RC3E	17 x 40 x **17.5 mm**
3304 B ZZ - C3	113041	20 x 52 x 22.**2 mm**
3305 B 2RS - C3	113042	25 x 62 x 25.**4 mm**
3308 A 2RS - C3	113044	40 x 90 x 36.**5 mm**
7202 B	113029	15 x 35 x 22.**2 mm**

FANS FOR PUMPS AND MOTORS

TYPE	CODE	DIMENSIONS	SHAFT DIAMETER
FAN-63	14VN059	104 x **21 mm**	**12 mm**
FAN-63/1	14VN067	99 x **22 mm**	**12 mm**
FAN-63/2	14VN068	99 x **26 mm**	**12 mm**
FAN-71R	14VN07	125 x **24 mm**	**14.5 mm**
FAN-71	14VN076	114 x **20 mm**	**14.5 mm**
FAN-71/1	14VN072	116 x **23 mm**	**14.5 mm**
FAN-80R	14VN08	138 x **27 mm**	**20 mm**
FAN-80	14VN08181	126 x **26 mm**	**20 mm**
FAN-90R	14VN09	162 x **32 mm**	**24 mm**
FAN-90	14VN095	148 x **33 mm**	**24 mm**
FAN-100R	14VN10	176 x **38 mm**	**28 mm**
FAN-100	14VN10162	155 x **37 mm**	**28 mm**
FAN-132	14VN132	165 x **45 mm**	**36 mm**
FAN-180	14VN180	240 x **60 mm**	**55 mm**
FAN-250	14VN250	230 x **90 mm**	**63 mm**

CAPACITORS WITH FASTON CONNECTIONS

TYPE F
Capacitor with faston

TYPE	CODE	CAPACITY	Voltage	Frequency
10 F	111010F	**10** µF	450 VL	50 – 60 Hz
10 FC *	111010FC	**10** µF	450 VL	50 – 60 Hz
12 F	111012F	**12.5** µF	450 VL	50 – 60 Hz
14 F	111014F	**14** µF	450 VL	50 – 60 Hz
16 F - 500	111016F5	**16** µF	500 VL	50 – 60 Hz
16 F - 450	111016F		450 VL	50 – 60 Hz
16 F - 250	112016F		250 VL	50 – 60 Hz
20 F - 500	111020F5	**20** µF	500 VL	50 – 60 Hz
20 F - 450	111020F		450 VL	50 – 60 Hz
25 F - 450	111025F	**25** µF	450 VL	50 – 60 Hz
25 F - 250	112025F		250 VL	50 – 60 Hz
30 F - 250	112030F	**30** µF	250 VL	50 – 60 Hz
31 F	111031F	**31.5** µF	450 VL	50 – 60 Hz
35 F	111035F	**35** µF	450 VL	50 – 60 Hz
35 FC *	111035F1	**35** µF	450 VL	50 – 60 Hz
40 F	111040F	**40** µF	450 VL	50 – 60 Hz
45 F	111045F	**45** µF	450 VL	50 – 60 Hz
50 F	111050F	**50** µF	450 VL	50 – 60 Hz
60 F - 450	111060F	**60** µF	450 VL	50 – 60 Hz
60 F - 300	112061F		300 VL	50 – 60 Hz
60 F - 250	112060F		250 VL	50 – 60 Hz
70 F	111070F	**70** µF	450 VL	50 – 60 Hz
80 F	112080F	**80** µF	250 VL	50 – 60 Hz
90 F	111090F	**90** µF	450 VL	50 – 60 Hz

(*) **FC** = Special small capacitor
※ **VDE-IMQ approved capacitors**

CAPACITORS WITH OUTGOING CABLES

TYPE C
Capacitor with outgoing cables

TYPE	CODE	CAPACITY	Voltage	Frequency
10 C	1110102F	**10** µF	450 VL	50 – 60 Hz
12 C	1110122F	**12.5**µF	450 VL	50 – 60 Hz
16 C - 500	1110162F5	**16** µF	500 VL	50 – 60 Hz
16 C - 450	1110162F		450 VL	50 – 60 Hz
20 C - 500	1110202F5	**20** µF	500 VL	50 – 60 Hz
20 C - 450	1110202F		450 VL	50 – 60 Hz
25 C - 450	1110252F	**25** µF	450 VL	50 – 60 Hz
30 C - 250	1120302F	**30** µF	250 VL	50 – 60 Hz
31 C - 500	1110312F5	**31.5**µF	500 VL	50 – 60 Hz
31 C - 450	1110312F		450 VL	50 – 60 Hz
35 C - 500	1110352F5	**35** µF	500 VL	50 – 60 Hz
35 C - 450	1110352F		450 VL	50 – 60 Hz
35 CC * - 450	1110352F1	**35** µF	450 VL	50 – 60 Hz
40 C	1110402F	**40** µF	450 VL	50 – 60 Hz
50 C	1110502F	**50** µF	450 VL	50 – 60 Hz
60 C	1120602F	**60** µF	250 VL	50 – 60 Hz
70 C - 450	1110702F	**70** µF	450 VL	50 – 60 Hz
70 C - 250	1120702F5	**70** µF	250 VL	50 – 60 Hz
75 C	1110752F	**75** µF	450 VL	50 – 60 Hz
80 C - 250	1120802F	**80** µF	250 VL	50 – 60 Hz
80 C - 450	1110802FC	**80** µF	450 VL	50 – 60 Hz
100 C	1111002FC	**100** µF	450 VL	50 – 60 Hz

(*) **CC** = Special small capacitor
※ **VDE-IMQ approved capacitors**

CAPACITOR WITH CIRCUIT BREAKER

TYPE	CODE	CAPACITY	Voltage	Frequency
80 D	111080D2F	**80 µF**	320-480 VL	50 – 60 Hz

※ Capacitor for submersible pumps with grinder (TRITUS)

BEARINGS

MODEL	BEARINGS	
2CP		
2CP 25/130	6203 ZZ	6203 ZZ
2CP 25/14 2CP 25/16	6204 ZZ - C3	6204 ZZ - C3
2CP 32/200 2CP 32/210	6206 ZZ - C3	6206 ZZ - C3
2CP 40/180	6306 ZZ - C3	6206 ZZ - C3
2CP 40/200	6308 ZZ - C3	6308 ZZ - C3
2-5CP		
2-3-4CP 80 3CP 100	6202 ZZ - C3	6201 ZZ
4CP 100 5CP 80-100 I	6203 ZZ	6203 ZZ
2-5CR		
2-3-4CR 80 3CR 100	6202 ZZ - C3	6201 ZZ
4CR 100 5CR 80-100	6203 ZZ	6203 ZZ
4BLOCK		
4BLOCK	6203	6203
BC		
BC 10	6203 ZZ - C3	6203 ZZ - C3
BC 15-20	6303 2RS - C3	6203 ZZ - C3
BC 40-55-75	6306 ZZ - C3	6304 ZZ - C3
BC -MF		
BC 10 -MF	6203 ZZ - C3	6203 ZZ - C3
BC 15-20 -MF	6303 2RS - C3	6203 ZZ - C3
BC -ST		
BC 10 -ST	6203 ZZ - C3	6203 ZZ - C3
BC 15-20 -ST	6303 2RS - C3	6203 ZZ - C3
CK		
CK 50	6201 ZZ	6201 ZZ
CKR		
CKR 90	6203 ZZ	6203 ZZ
CP		
CP 100-130-132	6201 ZZ	6201 ZZ
CP 150-158	6203 ZZ	6203 ZZ
CP 160-170	6204 ZZ - C3	6204 ZZ - C3
CP 190-200	6304 ZZ	6204 ZZ - C3
CP 210	6307 ZZ - C3	6206 ZZ - C3
CP 220C	6206 ZZ - C3	6204 ZZ - C3
CP 220AH-A-B CP 230A-B-C CP 250B	6307 ZZ - C3	6206 ZZ - C3
CP 250A	6310 ZZ - C3	6308 ZZ - C3
CP ST4-ST6		
CP 100-130-132 ST4-ST6	6201 ZZ	6201 ZZ
CP 150-158 ST4-ST6	6203 ZZ	6203 ZZ
CP 170-180-190-200 ST4-ST6	6204 ZZ - C3	6204 ZZ - C3
D		
D 8-10-20	6203 ZZ - C3	6203 ZZ - C3
D 30	6303 2RS - C3	6203 ZZ - C3

MODEL	BEARINGS	
DAVIS		
DAVIS	6203 ZZ - C3	6203 ZZ - C3
DC		
DC 8-10-20-30	6203 ZZ - C3	6203 ZZ - C3
DC 42-43-44	3305B 2RS	6204 ZZ - C3
DG-BLU		
DG-BLU	6203 ZZ	6203 ZZ
F		
F 32/160	6306 ZZ - C3	6206 ZZ - C3
F 32/200	6307 ZZ - C3	6206 ZZ - C3
F 32/250	6310 ZZ - C3	6308 ZZ - C3
F 40/125	6206 ZZ - C3	6204 ZZ - C3
F 40/160	6306 ZZ - C3	6206 ZZ - C3
F 40/200	6307 ZZ - C3	6206 ZZ - C3
F 40/250	6310 ZZ - C3	6308 ZZ - C3
F 50/125	6306 ZZ - C3	6206 ZZ - C3
F 50/160	6307 ZZ - C3	6206 ZZ - C3
F 50/200 F 50/250	6310 ZZ - C3	6308 ZZ - C3
F 65/125	6307 ZZ - C3	6206 ZZ - C3
F 65/160 F 65/200 F 80/160 F 100/160	6310 ZZ - C3	6308 ZZ - C3
F 65/250 F 80/200 F 80/250B	6312 ZZ - C3	6212 ZZ - C3
F 80/250A	6314 ZZ - C3	6313 ZZ - C3
F 100/200	6312 ZZ - C3	6212 ZZ - C3
F 100/250	6314 ZZ - C3	6313 ZZ - C3
F -INOX		
F 50/160 -I F 65/125 -I	6307 ZZ - C3	6206 ZZ - C3
F4		
F4 32/160	6206 ZZ - C3	6204 ZZ - C3
F4 32/200	6307 ZZ - C3	6206 ZZ - C3
F4 32/250	6208 ZZ - C3	6206 ZZ - C3
F4 40/160	6206 ZZ - C3	6204 ZZ - C3
F4 40/200	6307 ZZ - C3	6206 ZZ - C3
F4 40/250	6208 ZZ - C3	6206 ZZ - C3
F4 50/125	6206 ZZ - C3	6204 ZZ - C3
F4 50/160	6307 ZZ - C3	6206 ZZ - C3
F4 50/200 F4 50/250	6208 ZZ - C3	6206 ZZ - C3
F4 65/125	6307 ZZ - C3	6206 ZZ - C3
F4 65/160 F4 65/200	6208 ZZ - C3	6206 ZZ - C3
F4 65/250	6310 ZZ - C3	6308 ZZ - C3
F4 80/160	6208 ZZ - C3	6206 ZZ - C3
F4 80/200 F4 80/250	6310 ZZ - C3	6308 ZZ - C3
F4 100/160	6208 ZZ - C3	6206 ZZ - C3
F4 100/200 F4 100/250	6310 ZZ - C3	6308 ZZ - C3

MODEL	BEARINGS	
F4 -INOX		
F4 50/160 -I	6307 ZZ - C3	6206 ZZ - C3
F4 65/125 -I		
FAMILY		
FAMILY	6201 ZZ	6201 ZZ
FCR		
FCR 15-30	6307 ZZ - C3	6206 ZZ - C3
FCR 80/2-3-4	6202 ZZ - C3	6201 ZZ
FCR 80/5	6203 ZZ	6203 ZZ
FCR 90-130-200-240	6304 2RS - C3	6204 ZZ - C3
FCR 100/3	6202 ZZ - C3	6201 ZZ
FCR 100/4-5	6203 ZZ	6203 ZZ
FG		
FG 32/160	6307 ZZ - C3	6307 ZZ - C3
FG 32/200		
FG 32/250	6307 ZZ - C3	6208 ZZ - C3
FG 40/125	6307 ZZ - C3	6307 ZZ - C3
FG 40/160		
FG 40/200		
FG 40/250	6307 ZZ - C3	6208 ZZ - C3
FG 50/125	6307 ZZ - C3	6307 ZZ - C3
FG 50/160		
FG 50/200		
FG 50/250	6307 ZZ - C3	6208 ZZ - C3
FG 65/125	6307 ZZ - C3	6307 ZZ - C3
FG 65/160		
FG 65/200		
FG 65/250	6309 ZZ - C3	6309 ZZ - C3
FG 80/160	6307 ZZ - C3	6307 ZZ - C3
FG 80/200	6309 ZZ - C3	6309 ZZ - C3
FG 80/250		
FG 100/160	6307 ZZ - C3	6307 ZZ - C3
FG 100/200	6309 ZZ - C3	6309 ZZ - C3
FG 100/250		
FLUID SOLAR		
FLUID SOLAR 1/10, 2/6, 4/4, 6/3	6203 2RS - C3	6203 ZZ - C3
FLUID SOLAR 1/20, 2/14, 4/8, 6/6	3203B 2RS - C3	6203 ZZ - C3
FUTURE JET		
FUTURE-JET 1	6201 ZZ	6201 ZZ
FUTURE-JET 2	6203 ZZ	6203 ZZ
FUTURE JET-ST		
FUTURE-JET 1-ST	6201 ZZ	6201 ZZ
FUTURE-JET 2-ST	6203 ZZ	6203 ZZ
HF		
HF 4-5-51	6203 ZZ	6203 ZZ
HF 50	6201 ZZ	6201 ZZ
HF 5M-70	6204 ZZ - C3	6204 ZZ - C3
HF 6	6304 ZZ	6204 ZZ - C3
HF 8-20	6306 ZZ - C3	6206 ZZ - C3
HF 30	6307 ZZ - C3	6206 ZZ - C3
HT & HT-PRO		
HT & HT-PRO 3/4-5-6-7	6304 2RS - C3	6204 ZZ - C3
HT & HT-PRO 3/8-9-10	6307 2RS - C3	6206 2RS - C3

MODEL	BEARINGS	
HT & HT-PRO 5/2-3-4-5-6	6304 2RS - C3	6204 ZZ - C3
HT & HT-PRO 5/7-8-9-10	6307 2RS - C3	6206 2RS - C3
HT & HT-PRO 8/3-4-5-6	6304 2RS - C3	6204 ZZ - C3
HT & HT-PRO 8/7-8-9-10-11	6307 2RS - C3	6206 2RS - C3
HT & HT-PRO 15/2-3-4-5	6307 2RS - C3	6206 2RS - C3
HT & HT-PRO 15/6-7	3309A 2RS	6308 2RS - C3
HT & HT-PRO 30/2-3-4	6307 2RS - C3	6206 2RS - C3
HT & HT-PRO 30/5-6-7-8	3309A 2RS	6308 2RS - C3
JCR		
JCR 1	6201 ZZ	6201 ZZ
JCR 2	6203 ZZ	6203 ZZ
JSW		
JSW 1	6201 ZZ	6201 ZZ
JSW 2	6203 ZZ	6203 ZZ
JSW 3	6204 ZZ - C3	6204 ZZ - C3
MAGNIFICA		
MAGNIFICA 1-2	6203 2RS - C3	6203 2RS - C3
MAGNIFICA 3-4-5	6204 2RS - C3	6204 2RS - C3
MC		
MC /45	6203 ZZ - C3	6203 ZZ - C3
MC /50-65	6305	6204 ZZ - C3
MC-F		
MC /50-65 -F	6305	6204 ZZ - C3
MC4		
MC4 /55	6309 ZZ - C3	6306 ZZ - C3
MC4 /80	3309B 2RS - C3	6308 ZZ - C3
MK		
MK	6304 ZZ	6204 ZZ - C3
NGA & NGA-PRO		
NGA & NGA-PRO 1-2	6203 ZZ	6203 ZZ
NGA & NGA-PRO 3	6204 ZZ - C3	6204 ZZ - C3
NK		
NK	6303 2RS - C3	6203 ZZ - C3
PK		
PK 60-65	6201 ZZ	6201 ZZ
PK 80-90	6203 ZZ	6203 ZZ
PK 100-200-300	6204 ZZ - C3	6204 ZZ - C3
PKS		
PKS 60-65	6201 ZZ	6201 ZZ
PKS 80	6203 ZZ	6203 ZZ
PLUG & DRAIN		
PLUG & DRAIN	6201 ZZ	6201 ZZ
PLURIJET		
PLURIJET 3-4/80	6202 ZZ - C3	6201 ZZ
PLURIJET 3-4/90		
PLURIJET 5-6/90	6304 2RS - C3	6204 ZZ - C3
PLURIJET 3/100	6202 ZZ - C3	6201 ZZ
PLURIJET 4/100	6203 ZZ	6203 ZZ
PLURIJET 3/120	6202 ZZ - C3	6201 ZZ
PLURIJET 4/120	6203 ZZ	6203 ZZ
PLURIJET /130-200	6304 2RS - C3	6204 ZZ - C3

BEARINGS

MODEL	BEARINGS	
PQ		
PQ 60-61-65	6201 ZZ	6201 ZZ
PQ 80-90	6203 ZZ	6203 ZZ
PQ 100-200-300	6204 ZZ - C3	6204 ZZ - C3
PQ 3000		
PQ 3000	6204 ZZ - C3	6204 ZZ - C3
PQ-Bs, PQ-PPS		
PQ 60-65-81 Bs PQ81-PPS	6201 ZZ	6201 ZZ
PQA		
PQA 60	6201 ZZ	6201 ZZ
PQA 70-90	6203 ZZ	6203 ZZ
PV		
PV 55-60-65-81	6201 ZZ	6201 ZZ
PV 70-90	6203 ZZ	6203 ZZ
RX		
RX 1-2-3	6201 ZZ	6201 ZZ
RX 4-5	6203 ZZ - C3	6203 ZZ - C3
RX VORTEX		
RX 2-3/20	6201 ZZ	6201 ZZ
RX 4-5/40	6203 ZZ - C3	6203 ZZ - C3
SPRINKLER		
SKR 1.1-1.5	6204 ZZ - C3	6204 ZZ - C3
TEX		
TEX	6201 ZZ	6201 ZZ
TOP		
TOP 1-2-3	6201 ZZ	6201 ZZ
TOP 4-5	6203 ZZ - C3	6203 ZZ - C3
TOP FLOOR		
TOP FLOOR	6201 ZZ	6201 ZZ
TOP MULTI-AD		
TOP MULTI 1-AD	6201 ZZ - C3	6201 ZZ - C3
TOP MULTI		
TOP MULTI 1-2-3	6201 ZZ - C3	6201 ZZ - C3
TOP MULTI 4-5	6302 ZZ	6201 ZZ
TOP MULTI-EVO		
TOP MULTI 1-2-3 EVO	6201 ZZ - C3	6201 ZZ - C3
TOPMULTI 4-5 EVO	6302 ZZ	6201 ZZ
TOP MULTI-TECH		
TOP MULTI TECH 2-3	6202 ZZ - C3	6201 ZZ
TOP MULTI TECH 4-5	6302 ZZ	6201 ZZ
TOP MULTI-EVOTECH		
TOP MULTI EVOTECH 2-3	6202 ZZ - C3	6201 ZZ
TOP MULTI EVOTECH 4-5	6302 ZZ	6201 ZZ
TOP VORTEX		
TOP VORTEX	6201 ZZ	6201 ZZ
TRITUS		
TRITUS TR 0.75-0.9-1.1-1.3	6203 ZZ - C3	6203 ZZ - C3
TRITUS TR 1.5-2.2	3304B ZZ - C3	6304 ZZ - C3
TRITUS TR 2.2AP-3-3AP-4	3305B 2RS	6204 ZZ - C3
TRITUS INOX		
TIG	6303 2RS - C3	6203 ZZ - C3

MODEL	BEARINGS	
UP		
UP	6303 2RS - C3	6203 ZZ - C3
VX		
VX 8-10	6203 ZZ - C3	6203 ZZ - C3
VX 15-20	6303 2RS - C3	6203 ZZ - C3
VX 40-55-75	6306 ZZ - C3	6304 ZZ - C3
VX -MF		
VX 8-10 -MF	6203 ZZ - C3	6203 ZZ - C3
VX 15-20 -MF	6303 2RS - C3	6203 ZZ - C3
VX -ST		
VX 8-10 -ST	6203 ZZ - C3	6203 ZZ - C3
VX 15-20 -ST	6303 2RS - C3	6203 ZZ - C3
VXC		
VXC /35-45	6203 ZZ - C3	6203 ZZ - C3
VXC /50-65	6305	6204 ZZ - C3
VXC-F		
VXC /50-65 -F	6305	6204 ZZ - C3
VXC4		
VXC4 /80	3309B 2RS - C3	6308 ZZ - C3
VXC4 /100	6309 ZZ - C3	6306 ZZ - C3
WR		
WR40-S/125 WR50-S/125	6203 2RS - C3	6203 2RS - C3
WR50/125	3205A 2RS	6204 2RS - C3
ZX1		
ZXm 1/40	6201 ZZ	6201 ZZ
ZX2		
ZXm 2/30-40	6203 ZZ - C3	6203 ZZ - C3

CAPACITORS

MODEL	CAPACITOR
2-5CP	
2CPm 80-I	10 µF - 450 VL
3CPm 100-I	14 µF - 450 VL
3CPm 80-I	12.5 µF - 450 VL
4CPm 100-I	20 µF - 450 VL
4CPm 80-I	14 µF - 450 VL
5CPm 100-I	25 µF - 450 VL
5CPm 80-I	20 µF - 450 VL
2-5CR	
2CRm 80	10 µF - 450 VL
3CRm 100	14 µF - 450 VL
3CRm 80	12.5 µF - 450 VL
4CRm 100	20 µF - 450 VL
4CRm 80	14 µF - 450 VL
5CRm 100	25 µF - 450 VL
5CRm 80	20 µF - 450 VL
2CP	
2CPm 25/14A	45 µF - 450 VL
2CPm 25/14B	31.5 µF - 450 VL
2CPm 25/16A	50 µF - 450 VL
2CPm 25/16B	45 µF - 450 VL
2CPm 25/16C	31.5 µF - 450 VL
2CPm 25/130N	20 µF - 450 VL
3SR	
3SRm 1/14	12.5 µF - 450 VL
3SRm 1/21	12.5 µF - 450 VL
3SRm 1/31	16 µF - 450 VL
3SRm 1/42	20 µF - 450 VL
3SRm 1/62	30 µF - 450 VL
3SRm 2/10	12.5 µF - 450 VL
3SRm 2/14	12.5 µF - 450 VL
3SRm 2/21	16 µF - 450 VL
3SRm 2/28	20 µF - 450 VL
3SRm 2/41	30 µF - 450 VL
3SRm 4/5	12.5 µF - 450 VL
3SRm 4/8	12.5 µF - 450 VL
3SRm 4/12	16 µF - 450 VL
3SRm 4/16	20 µF - 450 VL
3SRm 4/23	30 µF - 450 VL
3SRm 5/5	12.5 µF - 450 VL
3SRm 5/8	12.5 µF - 450 VL
3SRm 5/11	16 µF - 450 VL
3SRm 5/15	20 µF - 450 VL
3SRm 5/23	30 µF - 450 VL
4BLOCK	
4BLOCKm 2/7	20 µF - 450 VL
4BLOCKm 2/10	20 µF - 450 VL
4BLOCKm 2/13	35 µF - 450 VL
4BLOCKm 2/18	35 µF - 450 VL
4BLOCKm 4/5	20 µF - 450 VL
4BLOCKm 4/7	20 µF - 450 VL
4BLOCKm 4/9	35 µF - 450 VL
4BLOCKm 6/10	35 µF - 450 VL
4BLOCKm 4/13	35 µF - 450 VL

MODEL	CAPACITOR
4BLOCKm 6/3	20 µF - 450 VL
4BLOCKm 6/5	20 µF - 450 VL
4BLOCKm 6/7	35 µF - 450 VL
4BLOCKm 8/3	20 µF - 450 VL
4BLOCKm 8/5	35 µF - 450 VL
4BLOCKm 8/8	35 µF - 450 VL
4PD	
4PDm/0.50	20 µF - 450 VL
4PDm/0.75	25 µF - 450 VL
4PDm/1	35 µF - 450 VL
4PDm/1.5	40 µF - 450 VL
4PDm/2	60 µF - 450 VL
4PDm/3	75 µF - 450 VL
4PS	
4PSm/0.50	20 µF - 450 VL
4PSm/0.75	25 µF - 450 VL
4PSm/1	35 µF - 450 VL
4PSm/1.5	40 µF - 450 VL
4PSm/2	60 µF - 450 VL
4PSm/3	70 µF - 450 VL
BC	
BCm 10/50	25 µF - 450 VL
BCm 15/50	35 µF - 450 VL
BCm 20/50	35 µF - 450 VL
BC-MF	
BCm 10/50-MF	25 µF - 450 VL
BCm 15/50-MF	35 µF - 450 VL
BCm 20/50-MF	35 µF - 450 VL
BC-ST	
BCm 10/50-ST	25 µF - 450 VL
BCm 15/50-ST	35 µF - 450 VL
BCm 20/50-ST	35 µF - 450 VL
CK	
CKm 50	12.5 µF - 450 VL
CKm 50-BP	12.5 µF - 450 VL
CKR	
CKRm 90	20 µF - 450 VL
CP	
CPm 100	10 µF - 450 VL
CPm 130	12.5 µF - 450 VL
CPm 132	14 µF - 450 VL
CPm 150	20 µF - 450 VL
CPm 158	20 µF - 450 VL
CPm 170	31.5 µF - 450 VL
CPm 170M	31.5 µF - 450 VL
CPm 190	45 µF - 450 VL
CPm 200	50 µF - 450 VL
CPm 160A	50 µF - 450 VL
CPm 160B	45 µF - 450 VL
CPm 160C	31.5 µF - 450 VL
CPm 220C	50 µF - 450 VL
CP-ST4	
CPm 100-ST4	10 µF - 450 VL

CAPACITORS

MODEL	CAPACITOR
CPm 130-ST4	12.5 µF - 450 VL
CPm 132-ST4	14 µF - 450 VL
CPm 150-ST4	20 µF - 450 VL
CPm 158-ST4	20 µF - 450 VL
CPm 170M-ST4	31.5 µF - 450 VL
CPm 170-ST4	31.5 µF - 450 VL
CPm 180-ST4	31.5 µF - 450 VL
CPm 190-ST4	45 µF - 450 VL
CPm 200-ST4	50 µF - 450 VL
CP-ST6	
CPm 100-ST6	10 µF - 450 VL
CPm 130-ST6	12.5 µF - 450 VL
CPm 132-ST6	14 µF - 450 VL
CPm 150-ST6	20 µF - 450 VL
CPm 158-ST6	20 µF - 450 VL
CPm 170M-ST6	31.5 µF - 450 VL
CPm 170-ST6	31.5 µF - 450 VL
CPm 180-ST6	31.5 µF - 450 VL
CPm 190-ST6	45 µF - 450 VL
CPm 200-ST6	50 µF - 450 VL
D	
Dm 8	20 µF - 450 VL
Dm 10	25 µF - 450 VL
Dm 20	25 µF - 450 VL
Dm 30	35 µF - 450 VL
DAVIS	
DAVIS	31.5 µF - 500 VL
DC	
DCm 10	20 µF - 450 VL
DCm 20	20 µF - 450 VL
DCm 30	25 µF - 450 VL
DCm 42	50 µF - 450 VL
DCm 43	60 µF - 450 VL
F	
Fm 32/160B	50 µF - 450 VL
Fm 32/160C	45 µF - 450 VL
Fm 40/125B	45 µF - 450 VL
Fm 40/125C	31.5 µF - 450 VL
Fm 40/160C	50 µF - 450 VL
Fm 50/125C	50 µF - 450 VL
FAMILY	
FAMILY	12.5 µF - 450 VL
FCR	
FCRm 80/2	10 µF - 450 VL
FCRm 80/3	12.5 µF - 450 VL
FCRm 80/4	14 µF - 450 VL
FCRm 80/5	20 µF - 450 VL
FCRm 100/3	14 µF - 450 VL
FCRm 100/4	20 µF - 450 VL
FCRm 100/5	25 µF - 450 VL
FCRm 90/5	31.5 µF - 450 VL
FCRm 90/6	45 µF - 450 VL
FCRm 90/7	50 µF - 450 VL

MODEL	CAPACITOR
FCRm 130/3	31.5 µF - 450 VL
FCRm 130/4	45 µF - 450 VL
FCRm 130/5	50 µF - 450 VL
FCRm 130/6	50 µF - 450 VL
FCRm 200/3	31.5 µF - 450 VL
FCRm 200/4	45 µF - 450 VL
FCRm 200/5	50 µF - 450 VL
FCRm 200/6	50 µF - 450 VL
FCRm 240/3	45 µF - 450 VL
FCRm 240/4	50 µF - 450 VL
FCRm 240/5	50 µF - 450 VL
FUTURE JET	
FUTURE JETm 1A	14 µF - 450 VL
FUTURE JETm 1B	12.5 µF - 450 VL
FUTURE JETm 1C	10 µF - 450 VL
FUTURE JETm 2A	25 µF - 450 VL
FUTURE JETm 2AH	25 µF - 450 VL
FUTURE JETm 2C	25 µF - 450 VL
FUTURE JET-ST	
FUTURE JETm 1A-ST	14 µF - 450 VL
FUTURE JETm 1B-ST	12.5 µF - 450 VL
FUTURE JETm 1C-ST	10 µF - 450 VL
FUTURE JETm 2A-ST	25 µF - 450 VL
FUTURE JETm 2C-ST	25 µF - 450 VL
HF	
HFm 4	20 µF - 450 VL
HFm 6A	50 µF - 450 VL
HFm 6B	45 µF - 450 VL
HFm 6C	31.5 µF - 450 VL
HFm 50A	14 µF - 450 VL
HFm 50B	12.5 µF - 450 VL
HFm 51A	20 µF - 450 VL
HFm 51B	20 µF - 450 VL
HFm 5A	25 µF - 450 VL
HFm 5AM	45 µF - 450 VL
HFm 5ARM	50 µF - 450 VL
HFm 5B	20 µF - 450 VL
HFm 5BM	31.5 µF - 450 VL
HFm 70B	45 µF - 450 VL
HFm 70C	31.5 µF - 450 VL
HT	
HTm 10/3	45 µF - 450 VL
HTm 10/4	50 µF - 450 VL
HTm 10/5	50 µF - 450 VL
HTm 3/4	31.5 µF - 450 VL
HTm 3/5	31.5 µF - 450 VL
HTm 3/6	45 µF - 450 VL
HTm 3/7	50 µF - 450 VL
HTm 5/2	31.5 µF - 450 VL
HTm 5/3	31.5 µF - 450 VL
HTm 5/4	45 µF - 450 VL
HTm 5/5	50 µF - 450 VL
HTm 5/6	50 µF - 450 VL
HTm 8/3	31.5 µF - 450 VL

MODEL	CAPACITOR
HTm 8/4	45 µF - 450 VL
HTm 8/5	50 µF - 450 VL
HTm 8/6	50 µF - 450 VL
HT-PRO	
HTm 3/4 - PRO	31.5 µF - 450 VL
HTm 3/5 - PRO	31.5 µF - 450 VL
HTm 3/6 - PRO	45 µF - 450 VL
HTm 3/7 - PRO	50 µF - 450 VL
HTm 5/2 - PRO	31.5 µF - 450 VL
HTm 5/3 - PRO	31.5 µF - 450 VL
HTm 5/4 - PRO	45 µF - 450 VL
HTm 5/5 - PRO	50 µF - 450 VL
HTm 5/6 - PRO	50 µF - 450 VL
HTm 8/3 - PRO	31.5 µF - 450 VL
HTm 8/4 - PRO	45 µF - 450 VL
HTm 8/5 - PRO	50 µF - 450 VL
HTm 8/6 - PRO	50 µF - 450 VL
HTm 10/3 - PRO	45 µF - 450 VL
HTm 10/4 - PRO	50 µF - 450 VL
HTm 10/5 - PRO	50 µF - 450 VL
JCR1	
JCRm 1A	14 µF - 450 VL
JCRm 1B	12.5 µF - 450 VL
JCRm 1C	10 µF - 450 VL
JCRm 2A	25 µF - 450 VL
JCRm 2C	25 µF - 450 VL
JSW1	
JSWm 1A	14 µF - 450 VL
JSWm 1B	12.5 µF - 450 VL
JSWm 1C	10 µF - 450 VL
JSWm 2A	25 µF - 450 VL
JSWm 2C	25 µF - 450 VL
JSWm 3AH	50 µF - 450 VL
JSWm 3AL	50 µF - 450 VL
JSWm 3AM	50 µF - 450 VL
JSWm 3BH	45 µF - 450 VL
JSWm 3BL	45 µF - 450 VL
JSWm 3BM	45 µF - 450 VL
JSWm 3CH	31.5 µF - 450 VL
JSWm 3CL	31.5 µF - 450 VL
JSWm 3CM	31.5 µF - 450 VL
MAGNIFICA	
MAGNIFICA 1m	20 µF - 450 VL
MAGNIFICA 2m	20 µF - 450 VL
MAGNIFICA 3m	31.5 µF - 450 VL
MAGNIFICA 4m	45 µF - 450 VL
MAGNIFICA 5m	50 µF - 450 VL
MC	
MCm 10/45	20 µF - 450 VL
MCm 15/45	25 µF - 450 VL
MCm 15/50	50 µF - 450 VL
MCm 20/50	50 µF - 450 VL
MCm 30/50	60 µF - 450 VL
MCm 30/65	60 µF - 450 VL

MODEL	CAPACITOR
MC-F	
MCm 15/50-F	50 µF - 450 VL
MCm 20/50-F	50 µF - 450 VL
MCm 30/50-F	60 µF - 450 VL
MCm 30/65-F	60 µF - 450 VL
MK	
MKm 3/3	31.5 µF - 450 VL
MKm 3/5	31.5 µF - 450 VL
MKm 3/6	45 µF - 450 VL
MKm 5/4	31.5 µF - 450 VL
MKm 5/5	31.5 µF - 450 VL
MKm 5/7	45 µF - 450 VL
MKm 5/8	50 µF - 450 VL
MKm 8/4	31.5 µF - 450 VL
MKm 8/5	45 µF - 450 VL
MKm 8/6	50 µF - 450 VL
NGA	
NGAm 1A	20 µF - 450 VL
NGAm 1B	16 µF - 450 VL
NGAm 2A	20 µF - 450 VL
NGAm 2B	20 µF - 450 VL
NGAm 3A	50 µF - 450 VL
NGAm 3B	50 µF - 450 VL
NGAm 3C	45 µF - 450 VL
NGAm 3D	31.5 µF - 450 VL
NGA-PRO	
NGAm 1A-PRO	20 µF - 450 VL
NGAm 1B-PRO	16 µF - 450 VL
NGAm 2A-PRO	20 µF - 450 VL
NGAm 2B-PRO	20 µF - 450 VL
NGAm 3A-PRO	50 µF - 450 VL
NGAm 3B-PRO	50 µF - 450 VL
NGAm 3C-PRO	45 µF - 450 VL
NGAm 3D-PRO	31.5 µF - 450 VL
NK	
NKm 2/2 GE	20 µF - 450 VL
NKm 2/3 GE	20 µF - 450 VL
NKm 2/4 GE	25 µF - 450 VL
NKm 2/5 GE	25 µF - 450 VL
NKm 2/6 GE	35 µF - 450 VL
NKm 4/3 GE	20 µF - 450 VL
NKm 4/4 GE	25 µF - 450 VL
NKm 4/5 GE	25 µF - 450 VL
NKm 4/6 GE	35 µF - 450 VL
NKm 8/3 GE	25 µF - 450 VL
NKm 8/4 GE	35 µF - 450 VL
PK	
PKm 100	31.5 µF - 450 VL
PKm 200	45 µF - 450 VL
PKm 300	50 µF - 450 VL
PKm 60	10 µF - 450 VL
PKm 65	14 µF - 450 VL
PKm 80	20 µF - 450 VL
PKm 90	20 µF - 450 VL

CAPACITORS

MODEL	CAPACITOR
PKS	
PKSm 60	10 µF - 450 VL
PKSm 65	14 µF - 450 VL
PKSm 80	20 µF - 450 VL
PLUG & DRAIN	
RXm 2	10 µF - 450 VL
RXm 3	14 µF - 450 VL
TOP 2-FLOOR	10 µF - 450 VL
TOP 3	14 µF - 450 VL
PLURIJET	
PLURIJETm 3/100	14 µF - 450 VL
PLURIJETm 3/80	12.5 µF - 450 VL
PLURIJETm 4/100	20 µF - 450 VL
PLURIJETm 4/80	14 µF - 450 VL
PLURIJETm 3/120	14 µF - 450 VL
PLURIJETm 3/90	12.5 µF - 450 VL
PLURIJETm 4/120	20 µF - 450 VL
PLURIJETm 4/90	14 µF - 450 VL
PLURIJETm 3/130	31.5 µF - 450 VL
PLURIJETm 3/200	31.5 µF - 450 VL
PLURIJETm 4/130	45 µF - 450 VL
PLURIJETm 4/200	45 µF - 450 VL
PLURIJETm 5/130	50 µF - 450 VL
PLURIJETm 5/200	50 µF - 450 VL
PLURIJETm 5/90	31.5 µF - 450 VL
PLURIJETm 6/90	45 µF - 450 VL
PQ	
PQm 100	31.5 µF - 450 VL
PQm 200	45 µF - 450 VL
PQm 300	50 µF - 450 VL
PQm 60	10 µF - 450 VL
PQm 61	10 µF - 450 VL
PQm 65	14 µF - 450 VL
PQm 80	20 µF - 450 VL
PQm 90	20 µF - 450 VL
PQ81-Bs, PQ81-PPS	
PQm 81-Bs PQm 81-PPS	14 µF - 450 VL
PQA	
PQAm 60	10 µF - 450 VL
PQAm 70	16 µF - 450 VL
PQAm 90	20 µF - 450 VL
PQ-Bs	
PQm 60-Bs	10 µF - 450 VL
PQm 65-BS	14 µF - 450 VL
PRIMA	
PRIMA 50m	10 µF - 450 VL
PRIMA 75m	12 µF - 450 VL
PRIMA 100m	20 µF - 450 VL
PRIMA 150m	20 µF - 450 VL
PV	
PVm 55	10 µF - 450 VL
PVm 60	10 µF - 450 VL
PVm 65	14 µF - 450 VL
PVm 70	25 µF - 450 VL

MODEL	CAPACITOR
PVm 81	14 µF - 450 VL
PVm 90	25 µF - 450 VL
RX	
RXm 1	10 µF - 450 VL
RXm 2	10 µF - 450 VL
RXm 3	14 µF - 450 VL
RXm 4	20 µF - 450 VL
RXm 5	25 µF - 450 VL
RX-VORTEX	
RXm 2/20	10 µF - 450 VL
RXm 3/20	14 µF - 450 VL
RXm 4/40	20 µF - 450 VL
RXm 5/40	25 µF - 450 VL
SPRINKLER	
SKRm 1.1	31.5 µF - 450 VL
SKRm 1.5	45 µF - 450 VL
TEX	
TEX 2	10 µF - 450 VL
TEX 3	12.5 µF - 450 VL
TOP	
TOP 1	10 µF - 450 VL
TOP 2	10 µF - 450 VL
TOP 3	14 µF - 450 VL
TOP 4 N	16 µF - 450 VL
TOP 5 N	20 µF - 450 VL
TOP FLOOR	
TOP 1-FLOOR	10 µF - 450 VL
TOP 2-FLOOR	10 µF - 450 VL
TOP 3-FLOOR	14 µF - 450 VL
TOP MULTI	
TOP MULTI 1	10 µF - 450 VL
TOP MULTI 2	12.5 µF - 450 VL
TOP MULTI 3	12.5 µF - 450 VL
TOP MULTI 4	14 µF - 450 VL
TOP MULTI 5	14 µF - 450 VL
TOP MULTI-AD	
TOP MULTI 1-AD	10 µF - 450 VL
TOP MULTI-EVO	
TOP MULTI 1 EVO	10 µF - 450 VL
TOP MULTI 2-EVO	12.5 µF - 450 VL
TOP MULTI 3-EVO	12.5 µF - 450 VL
TOP MULTI 4-EVO	14 µF - 450 VL
TOP MULTI 5-EVO	14 µF - 450 VL
TOP MULTI-EVOTECH	
TOP MULTI-EVOTECH 2	12.5 µF - 450 VL
TOP MULTI-EVOTECH 3	12.5 µF - 450 VL
TOP MULTI-EVOTECH 4	14 µF - 450 VL
TOP MULTI-EVOTECH 5	14 µF - 450 VL
TOP MULTI-TECH	
TOP MULTI-TECH 2	12.5 µF - 450 VL
TOP MULTI-TECH 3	12.5 µF - 450 VL
TOP MULTI-TECH 4	14 µF - 450 VL
TOP MULTI-TECH 5	14 µF - 450 VL

MODEL	CAPACITOR
TOP VORTEX	
TOP 1 - VORTEX	10 µF - 450 VL
TOP 1 - VORTEX/GM	10 µF - 450 VL
TOP 2 - VORTEX	10 µF - 450 VL
TOP 2 - VORTEX/GM	10 µF - 450 VL
TOP 3 - VORTEX	14 µF - 450 VL
TOP 3 - VORTEX/GM	14 µF - 450 VL
TRITUS	
TRm 0.75	25 µF - 450 VL / 80 µF - 450 VL
TRm 0.9	25 µF - 450 VL / 80 µF - 450 VL
TRm 1.1	25 µF - 450 VL / 80 µF - 450 VL
TRm 1.3	25 µF - 450 VL / 80 µF - 450 VL
TRm 1.5	50 µF - 450 VL / 80 µF - 450 VL
TRm 2.2 AP	60 µF - 450 VL / 120 µF - 330 VL
TIGm 0.55	25 µF - 450 VL
TIGm 0.75	25 µF - 450 VL
TIGm 1.1	35 µF - 450 VL
TIGm 1.3	35 µF - 450 VL
TRITUS-TX	12.5 µF - 450 VL
UP	
UPm 2/2-GE	20 µF - 450 VL
UPm 2/3-GE	20 µF - 450 VL
UPm 2/4-GE	25 µF - 450 VL
UPm 2/5-GE	25 µF - 450 VL
UPm 2/6-GE	35 µF - 450 VL
UPm 4/3-GE	20 µF - 450 VL
UPm 4/4-GE	25 µF - 450 VL
UPm 4/5-GE	25 µF - 450 VL
UPm 4/6-GE	35 µF - 450 VL
UPm 8/3-GE	25 µF - 450 VL
UPm 8/4-GE	35 µF - 450 VL
VILLABELLA	
VILLABELLA 50m	20 µF - 450 VL
VILLABELLA 75m	20 µF - 450 VL
VILLABELLA 100m	25 µF - 450 VL
VILLABELLA 150m	30 µF - 450 VL
VILLABELLA 200m	40 µF - 450 VL
VILLABELLA 300m	40 µF - 450 VL
VX	
VXm 10/35	25 µF - 450 VL
VXm 10/50	25 µF - 450 VL
VXm 15/35	35 µF - 450 VL
VXm 15/50	35 µF - 450 VL
VXm 20/35	35 µF - 450 VL
VXm 20/50	35 µF - 450 VL
VXm 8/35	20 µF - 450 VL
VXm 8/50	20 µF - 450 VL
VXC	
VXCm 10/35	20 µF - 450 VL
VXCm 10/45	20 µF - 450 VL
VXCm 15/35	25 µF - 450 VL
VXCm 15/45	25 µF - 450 VL
VXCm 15/50	50 µF - 450 VL
VXCm 15/65	50 µF - 450 VL
VXCm 20/50	50 µF - 450 VL

MODEL	CAPACITOR
VXCm 20/65	50 µF - 450 VL
VXCm 30/50	60 µF - 450 VL
VXCm 30/65	60 µF - 450 VL
VXC-F	
VXCm 15/50-F	50 µF - 450 VL
VXCm 15/65-F	50 µF - 450 VL
VXCm 20/50-F	50 µF - 450 VL
VXCm 20/65-F	50 µF - 450 VL
VXCm 30/50-F	60 µF - 450 VL
VXCm 30/65-F	60 µF - 450 VL
VX-MF	
VXm 10/35-MF	25 µF - 450 VL
VXm 10/50-MF	25 µF - 450 VL
VXm 15/35-MF	35 µF - 450 VL
VXm 15/50-MF	35 µF - 450 VL
VXm 20/35-MF	35 µF - 450 VL
VXm 20/50-MF	35 µF - 450 VL
VXm 8/35-MF	20 µF - 450 VL
VXm 8/50-MF	20 µF - 450 VL
VX-ST	
VXm 10/35-ST	25 µF - 450 VL
VXm 10/50-ST	25 µF - 450 VL
VXm 15/35-ST	35 µF - 450 VL
VXm 15/50-ST	35 µF - 450 VL
VXm 20/35-ST	35 µF - 450 VL
VXm 20/50-ST	35 µF - 450 VL
VXm 8/35-ST	20 µF - 450 VL
VXm 8/50-ST	20 µF - 450 VL
WR	
WRm 40/125-SA	20 µF - 450 VL
WRm 40/125-SB	20 µF - 450 VL
WRm 50/125A	50 µF - 450 VL
WRm 50/125B	45 µF - 450 VL
WRm 50/125C	31.5 µF - 450 VL
WRm 50/125-SA	50 µF - 450 VL
WRm 50/125-SB	45 µF - 450 VL
ZX1	
ZXm 1A/40	16 µF - 450 VL
ZXm 1B/40	12.5 µF - 450 VL
ZXm 2/30	20 µF - 450 VL
ZXm 2/40	20 µF - 450 VL
ZX2-GM	
ZXm 2/30-GM	20 µF - 450 VL
ZXm 2/40-GM	20 µF - 450 VL

CABLE SIZING FOR SUBMERSIBLE MOTORS

SINGLE-PHASE 230 V - 50 Hz

MOTOR POWER (P2)		cable cross-section in mm²						
kW	HP	4 x 1	4 x 1.5	4 x 2.5	4 x 4	4 x 6	4 x 10	4 x 16
		maximum cable length in metres						
0.37	**0.50**	60	90	140				
0.55	**0.75**	45	70	110	180			
0.75	**1**	35	50	85	140	210		
1.1	**1.5**	25	35	60	95	145	240	
1.5	**2**		30	45	75	115	190	305
2.2	**3**			30	50	75	125	200

Three-phase 230 V — 50 Hz

MOTOR POWER (P2)		cable cross-section in mm²										
kW	HP	4x1	4 x 1.5	4 x 2.5	4 x 4	4 x 6	4 x 10	4 x 16	4 x 25	4 x 35	4 x 50	4 x 70
		maximum cable length in metres										
0.37	**0.50**	100	152	255								
0.55	**0.75**	83	126	210	338							
0.75	**1**	65	99	165	265	405						
1.1	**1.5**	48	72	120	192	292	485					
1.5	**2**		53	88	142	215	360					
2.2	**3**			60	97	147	245	392				
3	**4**			47	73	110	183	295	510			
4	**5.5**				55	83	138	220	380			
5.5	**7.5**					60	100	160	275	385		
7.5	**10**					45	73	114	195	275	395	
9.2	**12.5**						64	100	157	220	315	
11	**15**						54	87	135	190	270	378
13	**17.5**							75	117	164	236	330
15	**20**							65	102	144	205	287
18.5	**25**								82	114	162	225
22	**30**								69	95	137	190
30	**40**									70	102	142
37	**50**									52	68	95

Three-phase 400 V — 50 Hz

MOTOR POWER (P2)		cable cross-section in mm²										
kW	HP	4x1	4 x 1.5	4 x 2.5	4 x 4	4 x 6	4 x 10	4 x 16	4 x 25	4 x 35	4 x 50	4 x 70
		maximum cable length in metres										
0.37	**0.50**	300										
0.55	**0.75**	250	380									
0.75	**1**	195	295									
1.1	**1.5**	145	215	360								
1.5	**2**	105	160	265	425							
2.2	**3**	70	110	180	290	440						
3	**4**	55	85	140	220	330						
4	**5.5**	40	60	105	165	250	415					
5.5	**7.5**		45	75	120	180	300	480				
7.5	**10**		35	55	95	135	220	340	585			
9.2	**12.5**			47	75	115	190	300	470			
11	**15**			40	65	95	160	260	405			
13	**17.5**				60	85	140	225	350	490		
15	**20**				50	75	125	195	305	430		
18.5	**25**					58	100	155	245	340	485	
22	**30**					49	85	130	205	285	410	570
30	**40**					36	63	96	152	210	305	425
37	**50**						47	74	115	156	205	284

Voltage drop 3% - Maximum ambient temperature + 30 °C

PRESSURE DROP DIAGRAM

(for straight pipes of 15-250 mm internal diameter and flow rates of 8 to 8330 l/min)

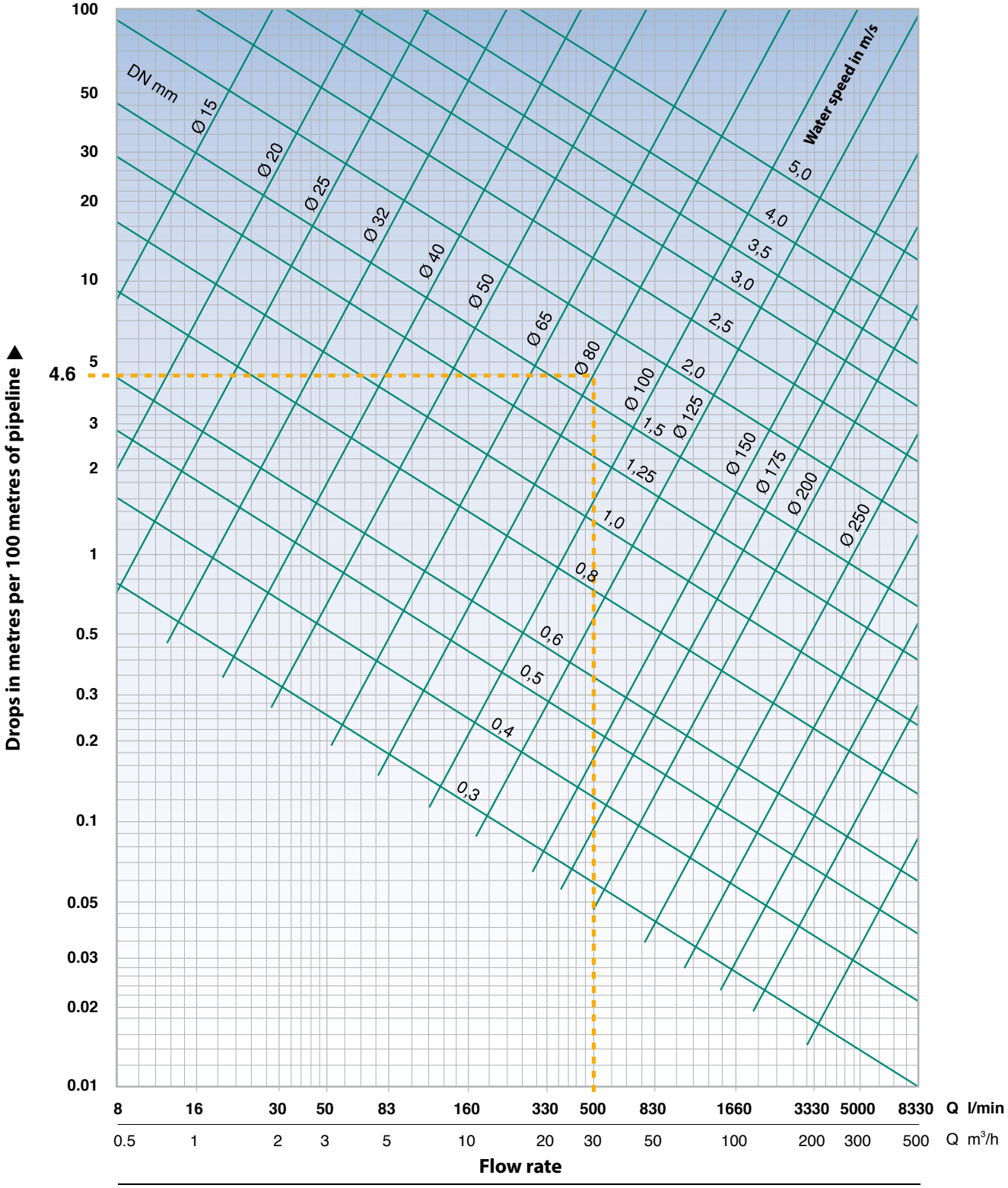

The data in the table are valid for cold water and for liquids with the same kinematic viscosity, for factory-new, cast-iron pipes. The pressure drops **hv** resulting from the tables must be multiplied by: **0.8** for steel pipes, new rolled; **1.25** for iron pipes, old, slightly rusted; **1.7** for old pipes for which the reduced cross-section due to scaling must be taken into account.

➠ **EXAMPLE**: Flow data **Q = 500 l/min**, new steel pipe Ø 80 mm, pipe length 50 m.
On the horizontal axis, locate the flow rate and continue vertically until you meet the line of DN 80 mm.
Pressure losses are therefore read on the vertical axis.
hv = 4.6 m per 100 m of pipe.
hv1 = 4.6 x 0.8 = 3.68 m/100 (steel tube).
To consider the actual length of the pipe:
hv2 = 3.68 x 50:100 = 1.84 m (for 50 m of pipe).
The flow velocity is determined by considering the point of intersection between the oblique straight lines to be 1.5-2 m/sec. Thus in the present case we have:
C = 1.7 metres/sec. ac.

CONVERSION OF UNITS OF MEASUREMENT

LENGTH

millimeter mm	centimeter cm	metres m	inch in	foot ft	yard yd
1	0.1	0.001	0.0394	0.0033	0.0011
10	1	0.01	0.3937	0.0328	0.0109
1000	100	1	393.701	3.2808	10.936
25.4	2.54	0.0254	1	0.0833	0.0278
304.8	30.48	0.3048	12	1	0.3333
914.4	91.44	0.9144	36	3	1

1 kilometre = 1000 metres = 0.62137 miles - 1 mile = 1609.34 metres = 1.60934 kilometres

VOLUME

cubic metre m^3	litre l	millilitre ml	gallon Imp. Imp. gal.	US gallon US gal	cube foot ft^3
1	1000	1×10^6	220	264.2	35.3147
0.001	1	1000	0.22	0.2642	0.0353
1×10^{-6}	0.001	1	2.2×10^{-4}	2.642 x 10-4 = 1047.75	3.53×10^{-5}
0.00455	4.546	4546	1	1.201	0.1605
0.00378	3.785	3785	0.8327	1	0.1337
0.0283	28.317	28.317	6.2288	7.4805	1

WEIGHT

kilogramme kg	pound lb	centiweight cwt	ton t	t long tn	t short sh. tn
1	2.205	0.0197	0.001	9.84×10^{-4}	0.0011
0.454	1	0.0089	4.54×10^{-4}	4.46×10^{-4}	5.0×10^{-4}
50.802	112	1	0.0508	0.05	0.056
1000	2204.6	19.684	1	0.9842	1.1023
1016	2240	20	1.0161	1	1.102
907.2	2000	17.857	0.9072	0.8929	1

VOLUMETRIC FLOW

litres latter l/s	litres minute l/min	Cubic metres time m^3/h	cubic feet time ft^3/h	cubic feet minute ft^3/min	Imp. gal. minute Imp. gal/min	US gal. minute US gal/min	US barrel day mineral oil US barrel/g
1	60	3.6	127.133	2.1189	13.2	15.85	543.439
0.017	1	0.06	2.1189	0.0353	0.22	0.264	9.057
0.278	16.667	1	35.3147	0.5886	3.666	4.403	150.955
0.008	0.472	0.0283	1	0.0167	0.104	0.125	4.275
0.472	28.317	1.6990	60	1	6.229	7.480	256.475
0.076	4.546	0.2728	9.6326	0.1605	1	1.201	41.175
0.063	3.785	0.2271	8.0209	0.1337	0.833	1	34.286
0.002	0.110	0.0066	0.2339	0.0039	0.024	0.029	1

PRESSURE AND HEAD

Newton metres panel/board N/m^2 (Pa)	kilopascal kPa	bar bar	kilogramme force centimeter panel/board kgf/cm^2	pound force inch panel/board psi	foot Water % ft H_2O	metres Water % m H_2O	millimeter mercury mm Hg	inch mercury In Hg
1	0.001	1×10^{-5}	1.02×10^{-5}	1.45×10^{-4}	3.35×10^{-4}	1.02×10^{-4}	0.0075	2.95×10^{-4}
1000	1	0.01	1.02×10^{-2}	0.145	0.335	0.102	7.5	0.295
100000	100	1	1.02	14.5	33.52	10.2	750.1	29.53
98067	98.07	0.981	1	14.22	32.81	10	735.6	28.96
6895	6.895	0.069	0.0703	1	2.31	0.703	51.72	2.036
2984	2.984	0.03	0.0305	0.433	1	0.305	22.42	0.882
9789	9.789	0.098	0.1	1.42	3.28	1	73.42	2.891
133.3	0.133	0.0013	0.0014	0.019	0.045	0.014	1	0.039
3386	3.386	0.0338	0.0345	0.491	1.133	0.345	25.4	1

PUMP SELECTOR

The spring of data

※ The Pedrollo pump selector.

※ The tool that helps you select the right pump for your requirements.

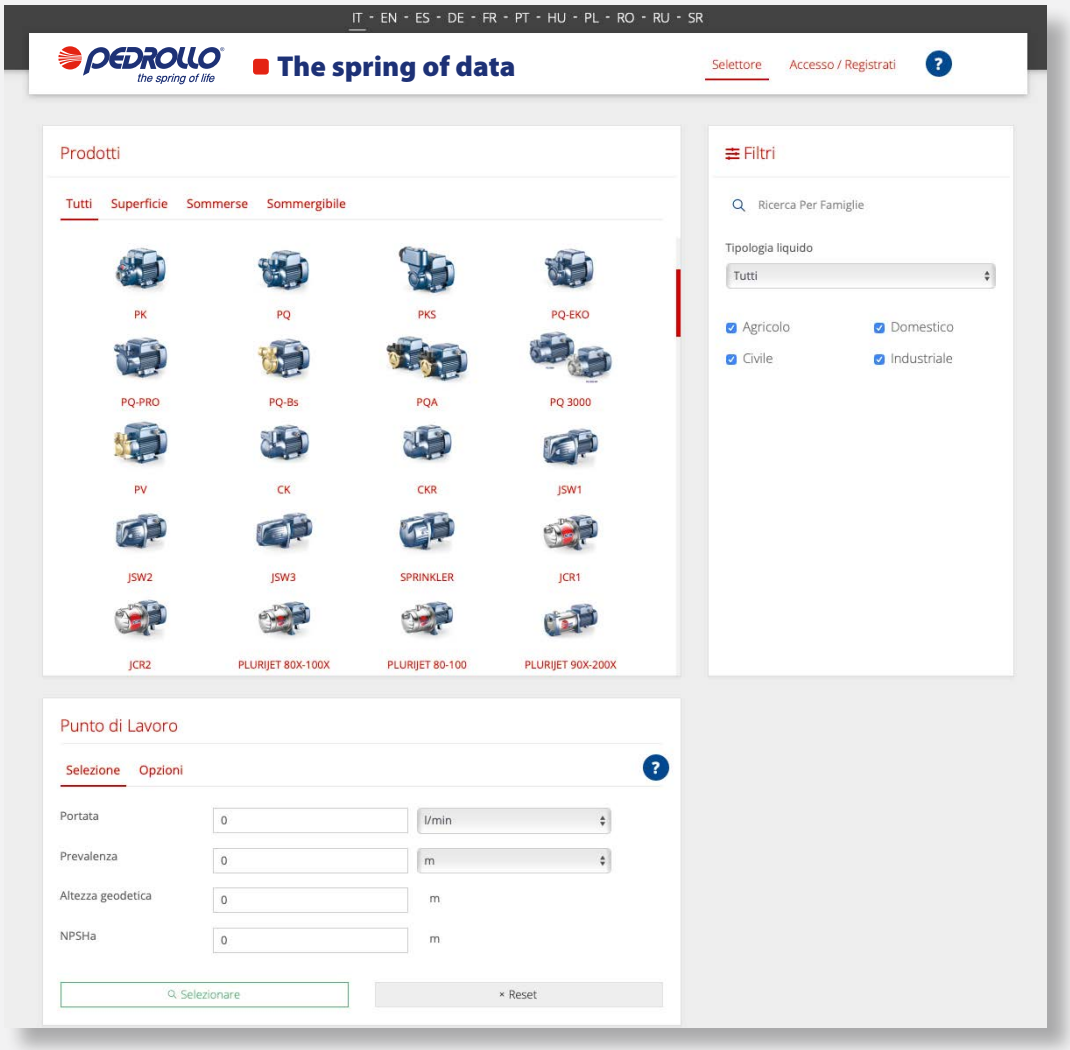

To access the **Pump Selector - The spring of data**
https://springofdata.pedrollo.com/selector

PUMP SELECTOR

For a general overview watch the Video Tutorial
https://www.youtube.com/watch?v=P9KGMOaDz58

VIDEO TUTORIAL

PEDROLLO SpA

Via Enrico Fermi 7
37047 San Bonifacio (VR)

telefono: +39 045 6136311
fax: +39 045 7612253

sales@pedrollo.com
www.pedrollo.com

PEDROLLO S.p.a. reserves the right to make modification without prior notice.

CODE Z-CATG050UKV24